Low Power 12-Bit, 250MSPS ADC

ISLA112P25M

ISLA112P25M

The ISLA112P25MREP is a low-power 12-bit, 250MSPS analog-to-digital converter. Designed with Intersil's proprietary FemtoCharge™ technology on a standard CMOS process.

A serial peripheral interface (SPI) port allows for extensive configurability, as well as fine control of various parameters such as gain and offset.

Digital output data is presented in selectable LVDS or CMOS formats. The ISLA112P25MREP is available in a 72 Ld QFN package with an exposed paddle. Operating from a 1.8V supply, performance is specified over the full military temperature range (-55°C to +125°C).

Applications

- Power Amplifier Linearization
- Radar and Satellite Antenna Array Processing
- Broadband Communications
- High-Performance Data Acquisition
- Communications Test Equipment

Key Specifications

- SNR = 62.7dBFS for f_{IN} = 105MHz (-1dBFS)
- SFDR = 67dBc for f_{IN} = 105MHz (-1dBFS)
- Total Power Consumption
  - 310mW @ 250MSPS (SDR Mode)
  - 234mW @ 250MSPS (DDR Mode)

Features

- Programmable Gain, Offset and Skew Control
- 1.3GHz Analog Input Bandwidth
- 60fs Clock Jitter
- Over-Range Indicator
- Selectable Clock Divider: ÷1, ÷2 or ÷4
- Clock Phase Selection
- Nap and Sleep Modes
- Two's Complement, Gray Code or Binary Data Format
- SDR/DDR LVDS-Compatible or LVCMOS Outputs
- Programmable Built-in Test Patterns
- Single-Supply 1.8V Operation
- Pb-Free (RoHS Compliant)

VID Features

- Specifications per DSCC VID V62/10609
- Full Military Temperature Electrical Performance from -55°C to +125°C
- Controlled Baseline with One Wafer Fabrication Site and One Assembly/Test Site
- Full Homogeneous Lot Processing in Wafer Fab
- No Combination of Wafer Fabrication Lots in Assembly
- Full Traceability Through Assembly and Test by
- Date/Trace Code Assignment
- Enhanced Process Change Notification
- Enhanced Obsolescence Management
- Eliminates Need for Up-Screening a COTS Component

Block Diagram

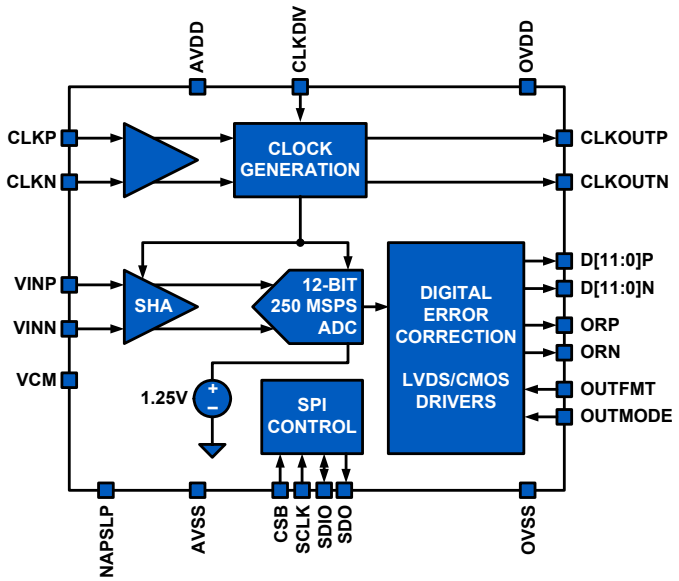

CAUTION: These devices are sensitive to electrostatic discharge; follow proper IC Handling Procedures.
1-888-INTERSIL or 1-888-468-3774 | Intersil (and design) is a registered trademark of Intersil Americas Inc.
FemtoCharge is a trademark of Kenet Inc. Copyright Intersil Americas Inc. 2011. All Rights Reserved
All other trademarks mentioned are the property of their respective owners.

Pin Configuration

ISLA112P25MREP
(72 LD QFN)
TOP VIEW

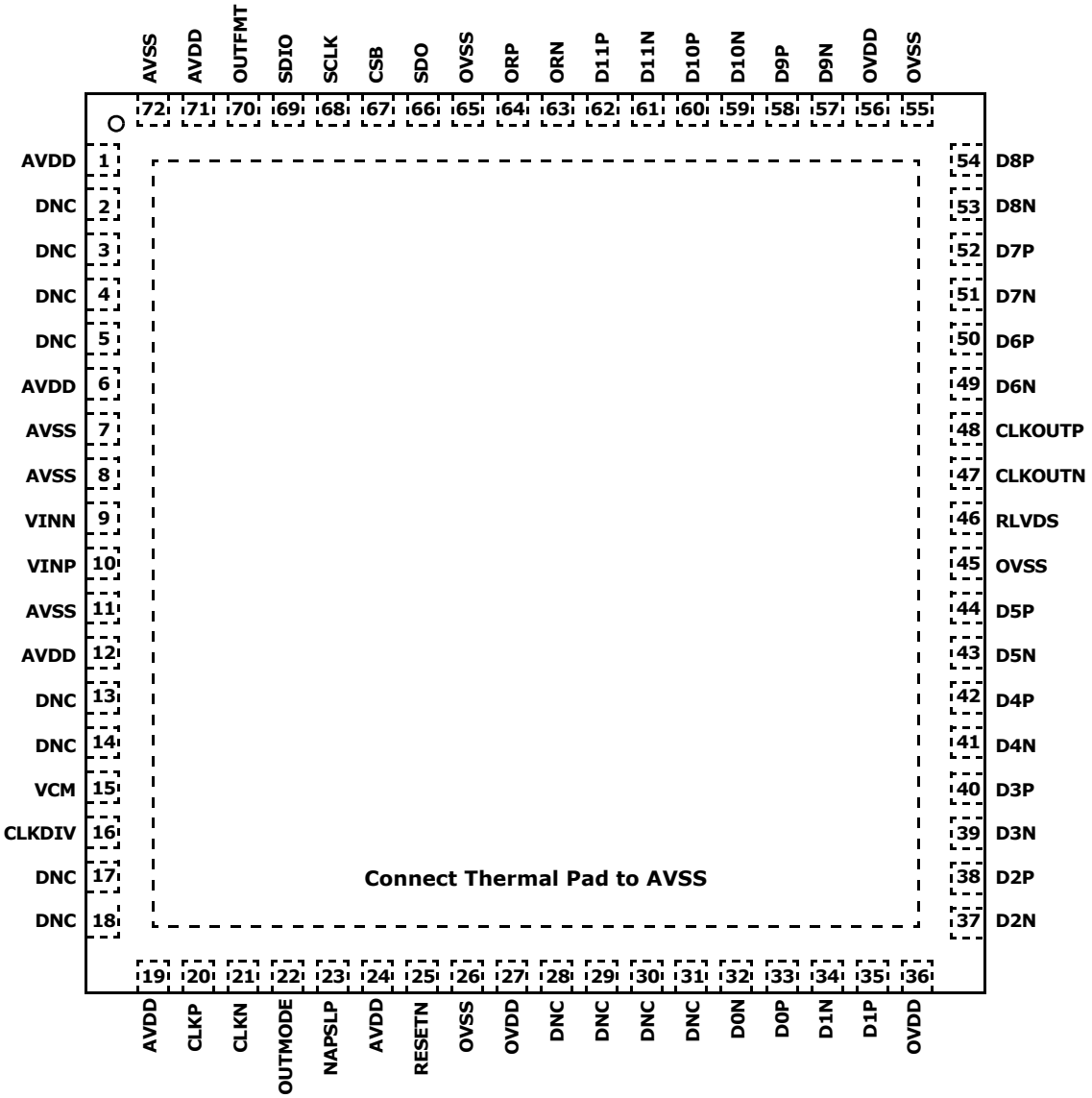

Pin Descriptions

PIN NUMBER	LVDS [LVCMOS] NAME	LVDS [LVCMOS] FUNCTION SDR MODE	DDR MODE COMMENTS
1, 6, 12, 19, 24, 71	AVDD	1.8V Analog Supply	
2, 3, 4, 5, 13, 14, 17, 18, 28, 29, 30, 31	DNC	Do Not Connect	
7, 8, 11, 72	AVSS	Analog Ground	
9, 10	VINN, VINP	Analog Input Negative, Positive	
15	VCM	Common Mode Output	
16	CLKDIV	Tri-Level Clock Divider Control	

Pin Descriptions (Continued)

PIN NUMBER	LVDS [LVCMOS] NAME	LVDS [LVCMOS] FUNCTION SDR MODE	DDR MODE COMMENTS
20, 21	CLKP, CLKN	Clock Input True, Complement	
22	OUTMODE	Tri-Level Output Mode Control (LVDS, LVCMOS)	
23	NAPSLP	Tri-Level Power Control (Nap, Sleep modes)	
25	RESETN	Power On Reset (Active Low, see page 15)	
26, 45, 55, 65	OVSS	Output Ground	
27, 36, 56	OVDD	1.8V Output Supply	
32	D0N [NC]	LVDS Bit 0 (LSB) Output Complement [NC in LVCMOS]	DDR Logical Bits 1, 0 (LVDS)
33	D0P [D0]	LVDS Bit 0 (LSB) Output True [LVCMOS Bit 0]	DDR Logical Bits 1, 0 (LVDS or CMOS)
34	D1N [NC]	LVDS Bit 1 Output Complement [NC in LVCMOS]	NC in DDR
35	D1P [D1]	LVDS Bit 1 Output True [LVCMOS Bit 1]	NC in DDR
37	D2N [NC]	LVDS Bit 2 Output Complement [NC in LVCMOS]	DDR Logical Bits 3,2 (LVDS)
38	D2P [D2]	LVDS Bit 2 Output True [LVCMOS Bit 2]	DDR Logical Bits 3,2 (LVDS or CMOS)
39	D3N [NC]	LVDS Bit 3 Output Complement [NC in LVCMOS]	NC in DDR
40	D3P [D3]	LVDS Bit 3 Output True [LVCMOS Bit 3]	NC in DDR
41	D4N [NC]	LVDS Bit 4 Output Complement [NC in LVCMOS]	DDR Logical Bits 5,4 (LVDS)
42	D4P [D4]	LVDS Bit 4 Output True [LVCMOS Bit 4]	DDR Logical Bits 5,4 (LVDS or CMOS)
43	D5N [NC]	LVDS Bit 5 Output Complement [NC in LVCMOS]	NC in DDR
44	D5P [D5]	LVDS Bit 5 Output True [LVCMOS Bit 5]	NC in DDR
46	RLVDS	LVDS Bias Resistor (Connect to OVSS with a 10kΩ, 1% resistor)	
47	CLKOUTN [NC]	LVDS Clock Output Complement [NC in LVCMOS]	
48	CLKOUTP [CLKOUT]	LVDS Clock Output True [LVCMOS CLKOUT]	
49	D6N [NC]	LVDS Bit 6 Output Complement [NC in LVCMOS]	DDR Logical Bits 7,6 (LVDS)
50	D6P [D6]	LVDS Bit 6 Output True [LVCMOS Bit 6]	DDR Logical Bits 7,6 (LVDS or CMOS)
51	D7N [NC]	LVDS Bit 7 Output Complement [NC in LVCMOS]	NC in DDR
52	D7P [D7]	LVDS Bit 7 Output True [LVCMOS Bit 7]	NC in DDR
53	D8N [NC]	LVDS Bit 8 Output Complement [NC in LVCMOS]	DDR Logical Bits 9,8 (LVDS)

Pin Descriptions (Continued)

PIN NUMBER	LVDS [LVCMOS] NAME	LVDS [LVCMOS] FUNCTION SDR MODE	DDR MODE COMMENTS
54	D8P [D8]	LVDS Bit 8 Output True [LVCMOS Bit 8]	DDR Logical Bits 9,8 (LVDS or CMOS)
57	D9N [NC]	LVDS Bit 9 Output Complement [NC in LVCMOS]	NC in DDR
58	D9P [D9]	LVDS Bit 9 Output True [LVCMOS Bit 9]	NC in DDR
59	D10N [NC]	LVDS Bit 10 Output Complement [NC in LVCMOS]	DDR Logical Bits 11,10 (LVDS)
60	D10P [D10]	LVDS Bit 10 Output True [LVCMOS Bit 10]	DDR Logical Bits 11,10 (LVDS or CMOS)
61	D11N [NC]	LVDS Bit 11 Output Complement [NC in LVCMOS]	NC in DDR
62	D11P [D11]	LVDS Bit 11 Output True [LVCMOS Bit 11]	NC in DDR
63	ORN [NC]	LVDS Over Range Complement [NC in LVCMOS]	
64	ORP [OR]	LVDS Over Range True [LVCMOS Over Range]	
66	SDO	SPI Serial Data Output **(4.7kΩ pull-up to OVDD is required)**	
67	CSB	SPI Chip Select (active low)	
68	SCLK	SPI Clock	
69	SDIO	SPI Serial Data Input/Output	
70	OUTFMT	Tri-Level Output Data Format Control (Two's Comp., Gray Code, Offset Binary)	
Exposed Paddle	AVSS	Analog Ground	

NOTE: LVCMOS Output Mode Functionality is shown in brackets (NC = No Connection). SDR is the default state at power-up for the 72 Ld package.

Ordering Information

PART NUMBER	PART MARKING	SPEED (MSPS)	TEMP. RANGE (°C)	PACKAGE (Pb-Free)	PKG. DWG. #
ISLA112P25MREP (Note 1)	ISLA112P25 MREP	250	-55 to +125	72 Ld QFN	L72.10x10D

NOTE:

1. These Intersil Pb-free plastic packaged products employ special Pb-free material sets; molding compounds/die attach materials and NiPdAu plate - e4 termination finish, which is RoHS compliant and compatible with both SnPb and Pb-free soldering operations. Intersil Pb-free products are MSL classified at Pb-free peak reflow temperatures that meet or exceed the Pb-free requirements of IPC/JEDEC J STD-020.

Table of Contents

Block Diagram 1
Pin Configuration 2
Pin Descriptions 2
Ordering Information 4
Absolute Maximum Ratings 6
Thermal Information 6
Operating Conditions 6
Electrical Specifications 6
Digital Specifications 8
Timing Diagrams 9
Switching Specifications 9
Typical Performance Curves 11
Theory of Operation 14
- Functional Description 14
- Power-On Calibration 14
- User-Initiated Reset 15
- Analog Input 15
- Clock Input 16
- Jitter 17
- Voltage Reference 17
- Digital Outputs 17
- Over Range Indicator 17
- Power Dissipation 17
- Nap/Sleep 17
- Data Format 18

Serial Peripheral Interface 20
- SPI Physical Interface 20
- SPI Configuration 21
- Device Information 21
- Indexed Device Configuration/Control 21
- Global Device Configuration/Control 22
- SPI Memory Map 25

Equivalent Circuits 26
ADC Evaluation Platform 27
Layout Considerations 27
- Split Ground and Power Planes 27
- Clock Input Considerations 27
- Exposed Paddle 27
- Bypass and Filtering 27
- LVDS Outputs 27
- LVCMOS Outputs 28
- Unused Inputs 28

Definitions 28
Revision History 28
Products 28
Package Outline Drawing 29

Absolute Maximum Ratings

AVDD to AVSS . . . . . -0.4V to 2.1V
OVDD to OVSS. . . . . -0.4V to 2.1V
AVSS to OVSS . . . . . -0.3V to 0.3V
Analog Inputs to AVSS . . . . . -0.4V to AVDD + 0.3V
Clock Inputs to AVSS . . . . . -0.4V to AVDD + 0.3V
Logic Input to AVSS . . . . . -0.4V to OVDD + 0.3V
Logic Inputs to OVSS . . . . . -0.4V to OVDD + 0.3V

Thermal Information

Thermal Resistance (Typical)	θ_{JA} (°C/W)	θ_{JC} (°C/W)
72 Ld QFN Package (Note 2, 3) . . .	24	0.8

Storage Temperature. . . . . -65°C to +150°C
Junction Temperature . . . . . +150°C

Operating Conditions

Temperature Range. . . . . -55°C to +125°C
Maximum Operating Junction Temperature. . . . . +135°C

CAUTION: Do not operate at or near the maximum ratings listed for extended periods of time. Exposure to such conditions may adversely impact product reliability and result in failures not covered by warranty.

NOTES:

2. θ_{JA} is measured with the component mounted on a high effective thermal conductivity test board in free air. See Tech Brief TB379 for details.
3. For θ_{JC}, the “case temp” location is the center of the exposed metal pad on the package underside.

Electrical Specifications

All specifications apply under the following conditions unless otherwise noted: AVDD = 1.8V, OVDD = 1.8V, T_A = -55°C to +125°C (typical specifications at +25°C), A_{IN} = -1dBFS, f_{SAMPLE} = Maximum Conversion Rate (per speed grade).

PARAMETER	SYMBOL	CONDITIONS	MIN (Note 4)	TYP	MAX (Note 4)	UNITS
DC SPECIFICATIONS (Note 5)						
Analog Input						
Full-Scale Analog Input Range	V_{FS}	Differential		1.47		V_{P-P}
Input Resistance	R_{IN}	Differential		1000		Ω
Input Capacitance	C_{IN}	Differential		1.8		pF
Full Scale Range Temp. Drift	A_{VTC}	Full Temp		90		ppm/°C
Input Offset Voltage	V_{OS}			±2		mV
Gain Error	E_G			±0.6		%
Common-Mode Output Voltage	V_{CM}			535		mV
Clock Inputs						
Inputs Common Mode Voltage				0.9		V
CLKP, CLKN Input Swing				1.8		V
Power Requirements						
1.8V Analog Supply Voltage	AVDD			1.8		V
1.8V Digital Supply Voltage	OVDD			1.8		V
1.8V Analog Supply Current	I_{AVDD}			90		mA
1.8V Digital Supply Current (SDR) (Note 6)	I_{OVDD}	3mA LVDS		58		mA
1.8V Digital Supply Current (DDR) (Note 6)	I_{OVDD}	3mA LVDS		39		mA
Power Supply Rejection Ratio	PSRR	30MHz, 200mV_{P-P} signal on AVDD		-36		dB
Total Power Dissipation						
Normal Mode (SDR)	P_D	3mA LVDS		267		mW
Normal Mode (DDR)	P_D	3mA LVDS		234		mW
Nap Mode	P_D			84		mW
Sleep Mode	P_D	CSB at logic high		2		mW
Nap Mode Wakeup Time (Note 7)		Sample Clock Running		1		µs
Sleep Mode Wakeup Time (Note 7)		Sample Clock Running		1		ms

Electrical Specifications All specifications apply under the following conditions unless otherwise noted: AVDD = 1.8V, OVDD = 1.8V, T_A = -55°C to +125°C (typical specifications at +25°C), A_{IN} = -1dBFS, f_{SAMPLE} = Maximum Conversion Rate (per speed grade). **(Continued)**

PARAMETER	SYMBOL	CONDITIONS	MIN (Note 4)	TYP	MAX (Note 4)	UNITS
AC SPECIFICATIONS (Note 9)						
Differential Nonlinearity	DNL			±0.3		LSB
Integral Nonlinearity	INL			±0.8		LSB
Minimum Conversion Rate (Note 8)	f_S MIN			40		MSPS
Maximum Conversion Rate	f_S MAX			250		MSPS
Signal-to-Noise Ratio (Note 5)	SNR	f_{IN} = 10MHz		66.1		dBFS
		f_{IN} = 105MHz		66.1		dBFS
		f_{IN} = 190MHz		65.9		dBFS
		f_{IN} = 364MHz		65.4		dBFS
		f_{IN} = 695MHz		63.8		dBFS
		f_{IN} = 995MHz		62.6		dBFS
Signal-to-Noise and Distortion	SINAD	f_{IN} = 10MHz		65.3		dBFS
		f_{IN} = 105MHz		65.3		dBFS
		f_{IN} = 190MHz		64.6		dBFS
		f_{IN} = 364MHz		63.9		dBFS
		f_{IN} = 695MHz		56.9		dBFS
		f_{IN} = 995MHz		49.6		dBFS
Effective Number of Bits	ENOB	f_{IN} = 10MHz		10.6		Bits
		f_{IN} = 105MHz		10.6		Bits
		f_{IN} = 190MHz		10.4		Bits
		f_{IN} = 364MHz		10.3		Bits
		f_{IN} = 695MHz		9.2		Bits
		f_{IN} = 995MHz		7.9		Bits
Spurious-Free Dynamic Range	SFDR	f_{IN} = 10MHz		83.0		dBc
		f_{IN} = 105MHz		87		dBc
		f_{IN} = 190MHz		79.4		dBc
		f_{IN} = 364MHz		76.1		dBc
		f_{IN} = 695MHz		60.6		dBc
		f_{IN} = 995MHz		50.7		dBc
Intermodulation Distortion	IMD	f_{IN} = 70MHz		-85.7		dBFS
		f_{IN} = 170MHz		-97.1		dBFS

Electrical Specifications All specifications apply under the following conditions unless otherwise noted: AVDD = 1.8V, OVDD = 1.8V, T_A = -55°C to +125°C (typical specifications at +25°C), A_{IN} = -1dBFS, f_{SAMPLE} = Maximum Conversion Rate (per speed grade). **(Continued)**

PARAMETER	SYMBOL	CONDITIONS	MIN (Note 4)	TYP	MAX (Note 4)	UNITS
Word Error Rate	WER			10^{-12}		
Full Power Bandwidth	FPBW			1.3		GHz

NOTES:

4. For min and max parameter limits, refer to DSCC drawing number V62/10609.
5. To ensure device accuracy the measurement temperature is to be within 60°C of the calibration temperature.
6. Digital Supply Current is dependent upon the capacitive loading of the digital outputs. I_{OVDD} specifications apply for 10pF load on each digital output.
7. See Nap /Sleep Mode description on page 17 for more details.
8. The DLL Range setting must be changed for low speed operation. See “Serial Peripheral Interface” on page 20 for more detail.
9. AC Specifications apply after internal calibration of the ADC is invoked at the given sample rate and temperature. Refer to “Power-On Calibration” on page 14 and “User-Initiated Reset” on page 15 for more details.

Digital Specifications

PARAMETER	SYMBOL	CONDITIONS	MIN	TYP	MAX	UNITS
INPUTS						
Input Current High (SDIO, RESETN)	I_{IH}	V_{IN} = 1.8V		1		µA
Input Current Low (SDIO, RESETN)	I_{IL}	V_{IN} = 0V		-12		µA
Input Voltage High (SDIO, RESETN)	V_{IH}			1.8		V
Input Voltage Low (SDIO, RESETN)	V_{IL}			0		V
Input Current High (OUTMODE, NAPSLP, CLKDIV, OUTFMT) (Note 10)	I_{IH}			25		µA
Input Current Low (OUTMODE, NAPSLP, CLKDIV, OUTFMT)	I_{IL}			25		µA
Input Capacitance	C_{DI}			3		pF
LVDS OUTPUTS						
Differential Output Voltage	V_T	3mA Mode		620		mV_{P-P}
Output Offset Voltage	V_{OS}	3mA Mode		965		mV
Output Rise Time	t_R			500		ps
Output Fall Time	t_F			500		ps
CMOS OUTPUTS						
Voltage Output High	V_{OH}	I_{OH} = -500µA		OVDD - 0.1		V
Voltage Output Low	V_{OL}	I_{OL} = 1mA		0.1		V
Output Rise Time	t_R			1.8		ns
Output Fall Time	t_F			1.4		ns

Timing Diagrams

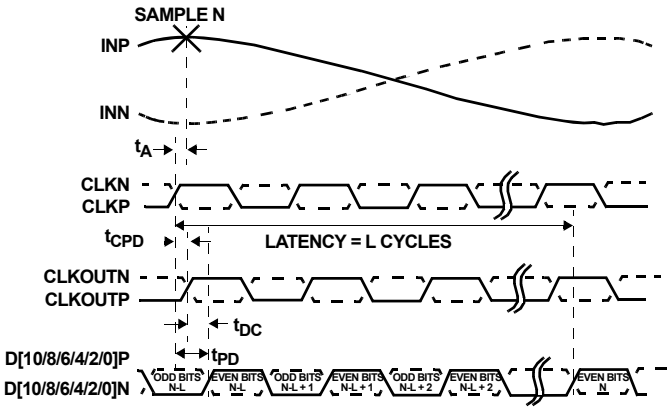

FIGURE 1A. DDR

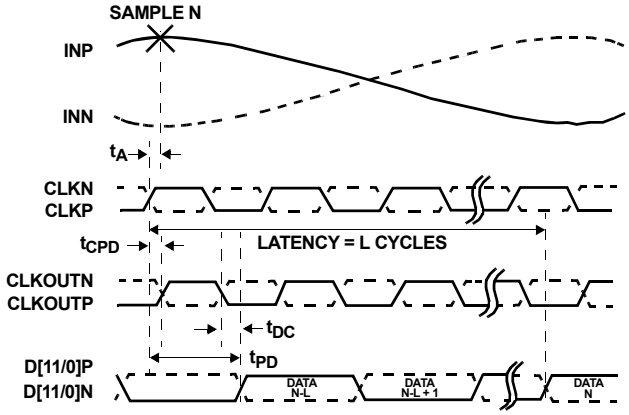

FIGURE 1B. SDR

FIGURE 1. LVDS TIMING DIAGRAMS (See “Digital Outputs” on page 17)

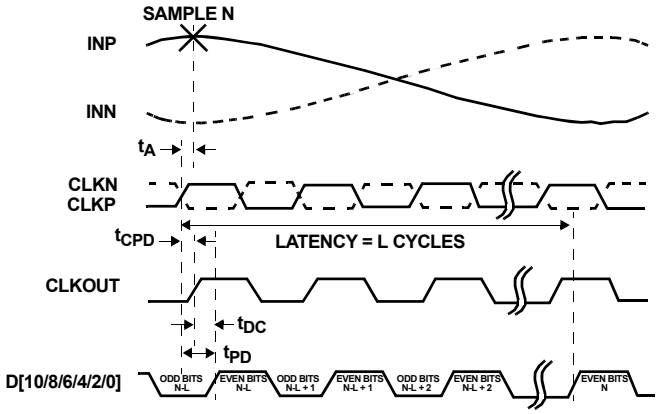

FIGURE 2A. DDRx

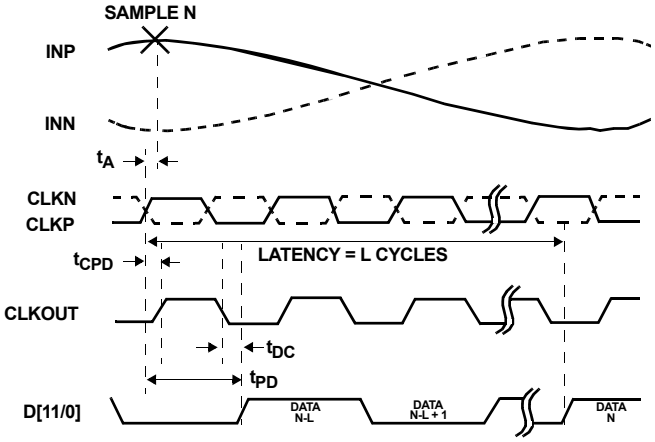

FIGURE 2B. SDR

FIGURE 2. CMOS TIMING DIAGRAM (See “Digital Outputs” on page 17)

Switching Specifications

PARAMETER	CONDITION	SYMBOL	MIN	TYP	MAX	UNITS
ADC OUTPUT						
Aperture Delay		t_A		375		ps
RMS Aperture Jitter		j_A		60		fs
Output Clock to Data Propagation Delay, LVDS Mode (Note 11)	DDR Rising Edge	t_{DC}		-50		ps
	DDR Falling Edge	t_{DC}		10		ps
	SDR Falling Edge	t_{DC}		-40		ps
Output Clock to Data Propagation Delay, CMOS Mode (Note 11)	DDR Rising Edge	t_{DC}		-10		ps
	DDR Falling Edge	t_{DC}		-90		ps
	SDR Falling Edge	t_{DC}		-50		ps

Switching Specifications (Continued)

PARAMETER	CONDITION	SYMBOL	MIN	TYP	MAX	UNITS
Latency (Pipeline Delay)		L		7.5		cycles
Over Voltage Recovery		t_{OVR}		1		cycles
SPI INTERFACE (Notes 12, 13)						
SCLK Period	Write Operation	t_{CLK}	Note 15			cycles (Note 12)
	Read Operation	t_{CLK}	Note 15			cycles
SCLK Duty Cycle (t_{HI}/t_{CLK} or t_{LO}/t_{CLK})	Read or Write		Note 15	50	Note 15	%
CSB↓ to SCLK↑ Setup Time	Read or Write	t_S	Note 15			cycles
CSB↑ after SCLK↑ Hold Time	Read or Write	t_H	Note 15			cycles
Data Valid to SCLK↑ Setup Time	Write	t_{DSW}	Note 15			cycles
Data Valid after SCLK↑ Hold Time	Write	t_{DHW}	Note 15			cycles
Data Valid after SCLK↓ Time	Read	t_{DVR}			Note 15	cycles
Data Invalid after SCLK↑ Time	Read	t_{DHR}	Note 15			cycles
Sleep Mode CSB↓ to SCLK↑ Setup Time (Note 14)	Read or Write in Sleep Mode	t_S	Note 15			µs

NOTES:

10. The Tri-Level Inputs internal switching thresholds are approximately 0.43V and 1.34V. It is advised to float the inputs, tie to ground or AVDD depending on desired function.
11. The input clock to output clock delay is a function of sample rate, using the output clock to latch the data simplifies data capture for most applications. Contact factory for more info if needed..
12. SPI Interface timing is directly proportional to the ADC sample period (4ns at 250MSPS).
13. The SPI may operate asynchronously with respect to the ADC sample clock.
14. The CSB setup time increases in sleep mode due to the reduced power state, CSB setup time in Nap mode is equal to normal mode CSB setup time (4ns min).
15. Refer to DSCC drawing number V62/10609 for min/max parameters.

Typical Performance Curves

All Typical Performance Characteristics apply under the following conditions unless otherwise noted: AVDD = OVDD = 1.8V, T_A = +25°C, A_{IN} = -1dBFS, f_{IN} = 105MHz, f_{SAMPLE} = Maximum Conversion Rate (per speed grade).

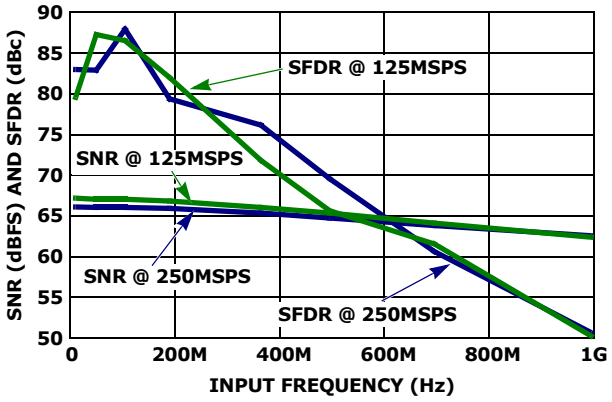

FIGURE 3. SNR AND SFDR vs f_{IN}

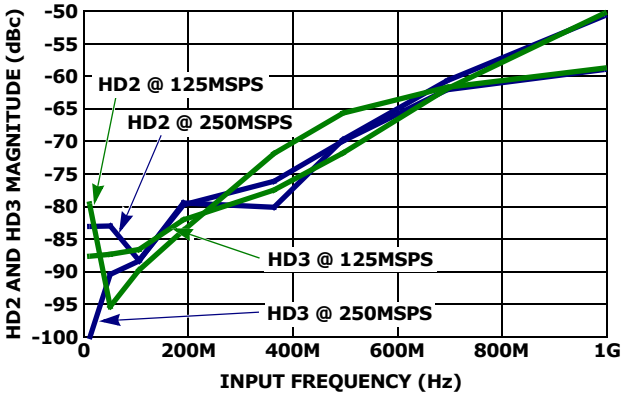

FIGURE 4. HD2 AND HD3 vs f_{IN}

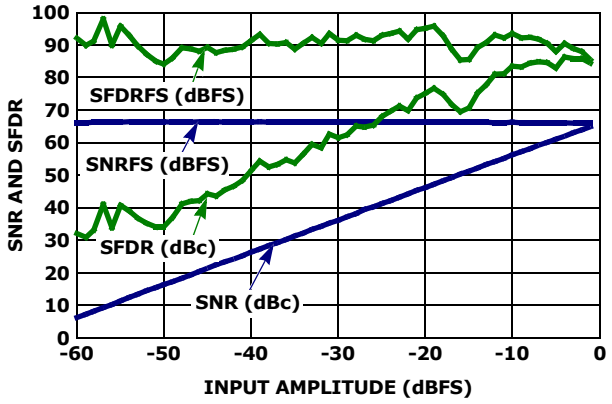

FIGURE 5. SNR AND SFDR vs A_{IN}

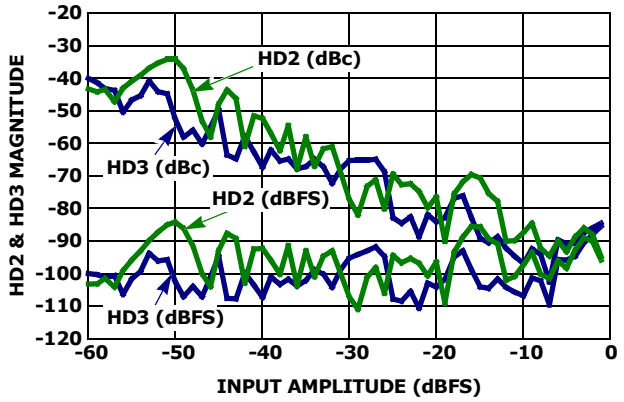

FIGURE 6. HD2 AND HD3 vs A_{IN}

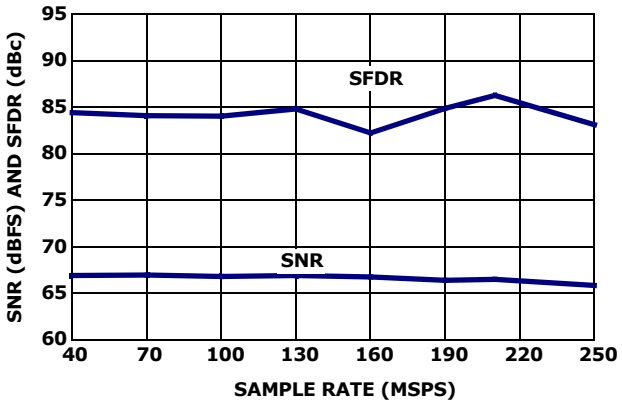

FIGURE 7. SNR AND SFDR vs f_{SAMPLE}

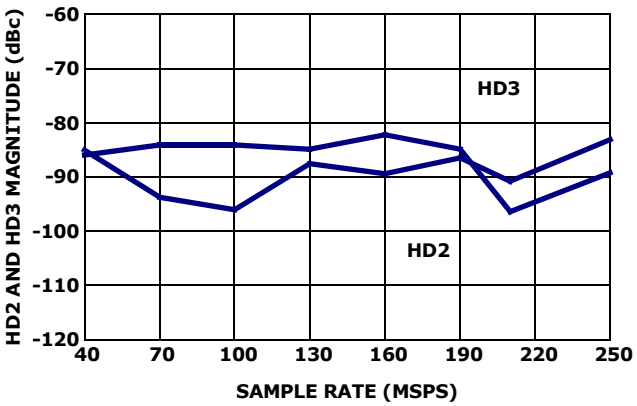

FIGURE 8. HD2 AND HD3 vs f_{SAMPLE}

Typical Performance Curves

All Typical Performance Characteristics apply under the following conditions unless otherwise noted: AVDD = OVDD = 1.8V, T_A = +25°C, A_{IN} = -1dBFS, f_{IN} = 105MHz, f_{SAMPLE} = Maximum Conversion Rate (per speed grade). **(Continued)**

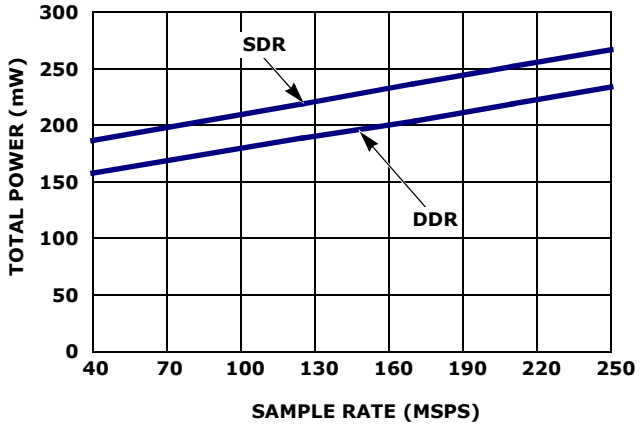

FIGURE 9. POWER vs f_{SAMPLE} IN 3mA LVDS MODE

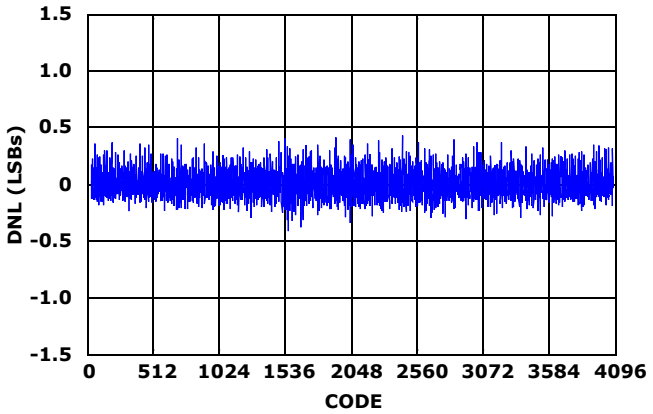

FIGURE 10. DIFFERENTIAL NONLINEARITY

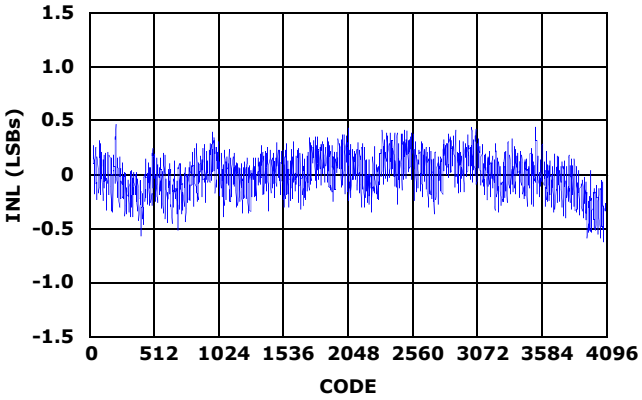

FIGURE 11. INTEGRAL NONLINEARITY

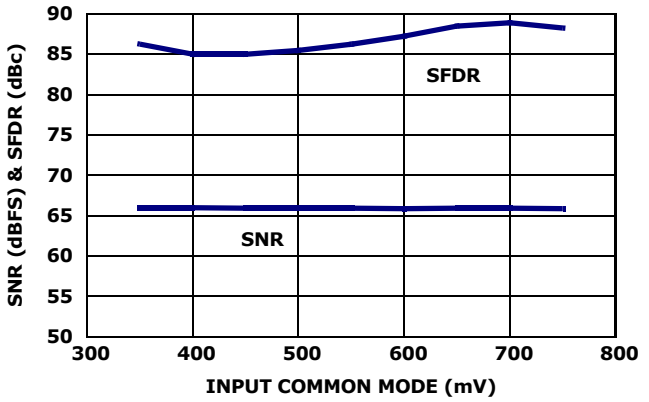

FIGURE 12. SNR AND SFDR vs VCM

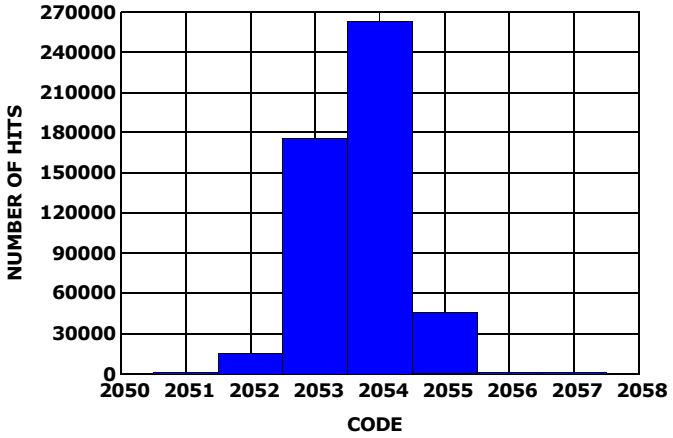

FIGURE 13. NOISE HISTOGRAM

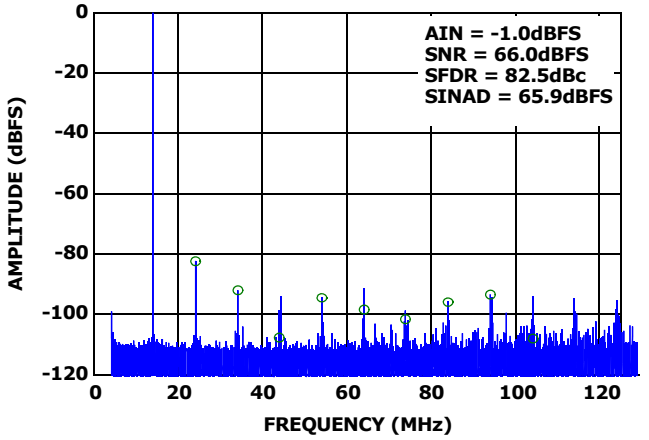

FIGURE 14. SINGLE-TONE SPECTRUM @ 10MHz

Typical Performance Curves

All Typical Performance Characteristics apply under the following conditions unless otherwise noted: AVDD = OVDD = 1.8V, T_A = +25°C, A_{IN} = -1dBFS, f_{IN} = 105MHz, f_{SAMPLE} = Maximum Conversion Rate (per speed grade). **(Continued)**

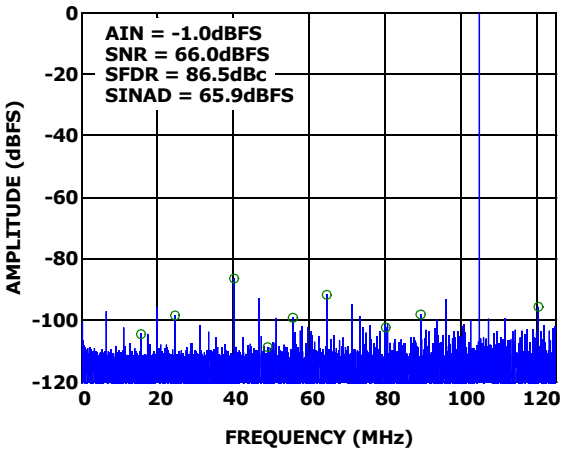

FIGURE 15. SINGLE-TONE SPECTRUM @ 105MHz

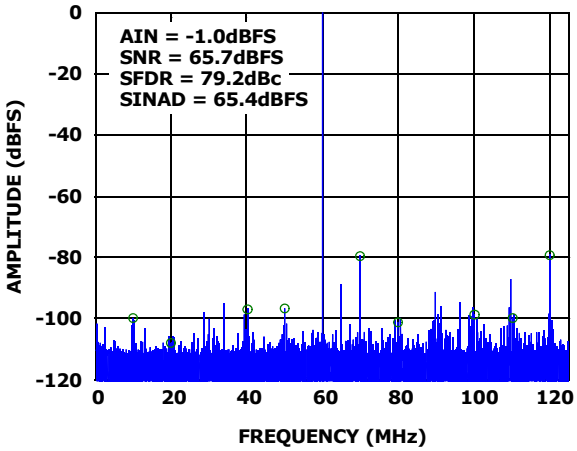

FIGURE 16. SINGLE-TONE SPECTRUM @ 190MHz

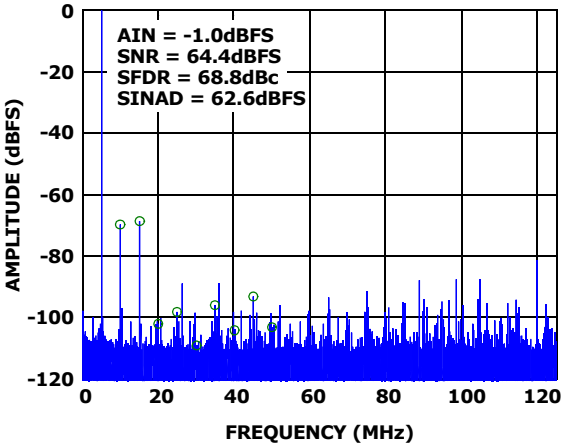

FIGURE 17. SINGLE-TONE SPECTRUM @ 495MHz

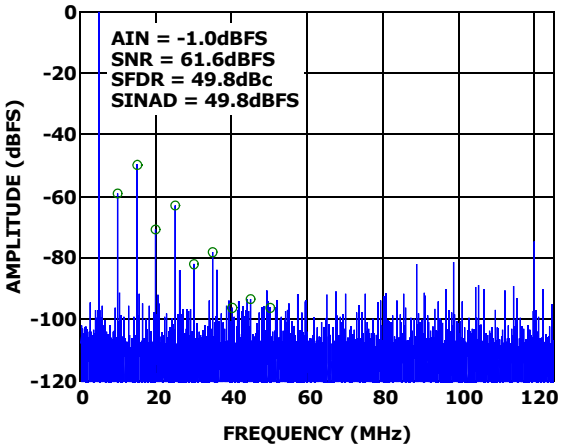

FIGURE 18. SINGLE-TONE SPECTRUM @ 995MHz

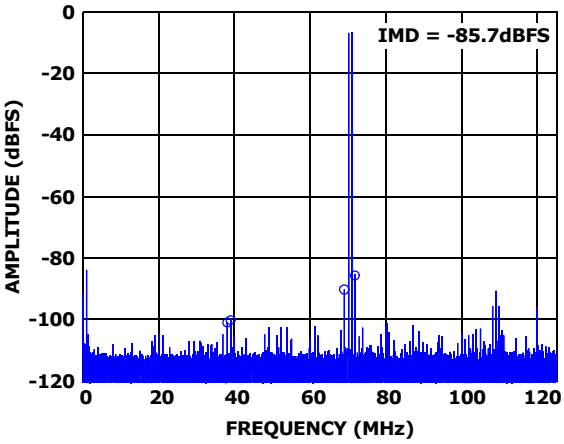

FIGURE 19. TWO-TONE SPECTRUM @ 70MHz

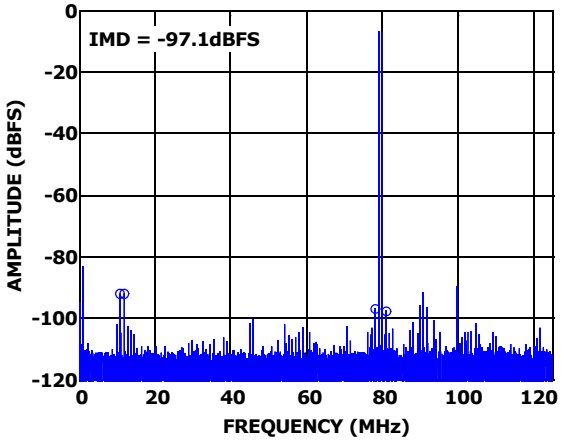

FIGURE 20. TWO-TONE SPECTRUM @ 170MHz

Theory of Operation

Functional Description

The ISLA112P25MREP is based upon a 12-bit, 250MSPS A/D converter core that utilizes a pipelined successive approximation architecture (Figure 21). The input voltage is captured by a Sample-Hold Amplifier (SHA) and converted to a unit of charge. Proprietary charge-domain techniques are used to successively compare the input to a series of reference charges. Decisions made during the successive approximation operations determine the digital code for each input value. The converter pipeline requires six samples to produce a result. Digital error correction is also applied, resulting in a total latency of seven and one half clock cycles. This is evident to the user as a time lag between the start of a conversion and the data being available on the digital outputs.

Power-On Calibration

The ADC performs a self-calibration at start-up. An internal power-on-reset (POR) circuit detects the supply voltage ramps and initiates the calibration when the analog and digital supply voltages are above a threshold. The following conditions must be adhered to for the power-on calibration to execute successfully:

- A frequency-stable conversion clock must be applied to the CLKP/CLKN pins
- DNC pins (especially 3, 4 and 18) must not be pulled up or down
- SDO (pin 66) must be high
- RESETN (pin 25) must begin low
- SPI communications must not be attempted

A user-initiated reset can subsequently be invoked in the event that the previously mentioned conditions cannot be met at power-up.

The SDO pin requires an external 4.7kΩ pull-up to OVDD. If the SDO pin is pulled low externally during power-up, calibration will not be executed properly.

After the power supply has stabilized, the internal POR releases RESETN and an internal pull-up pulls it high, which starts the calibration sequence. If a subsequent user-initiated reset is required, the RESETN pin should be connected to an open-drain driver with a drive strength of less than 0.5mA.

The calibration sequence is initiated on the rising edge of RESETN, as shown in Figure 22. The over-range output (OR) is set high once RESETN is pulled low, and remains in that state until calibration is complete. The OR output returns to normal operation at that time, so it is important that the analog input be within the converter's full-scale range to observe the transition. If the input is in an over-range condition, the OR pin will stay high, and it will not be possible to detect the end of the calibration cycle.

While RESETN is low, the output clock (CLKOUTP/CLKOUTN) is set low. Normal operation of the output clock resumes at the next input clock edge (CLKP/CLKN) after RESETN is deasserted. At 250MSPS the nominal calibration time is 200ms, while the maximum calibration time is 550ms.

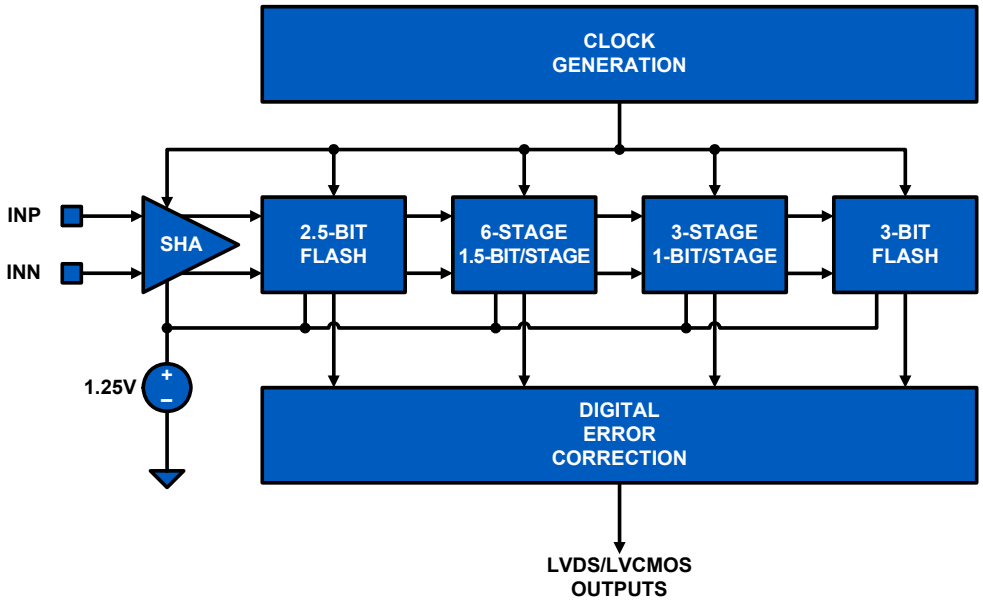

FIGURE 21. ADC CORE BLOCK DIAGRAM

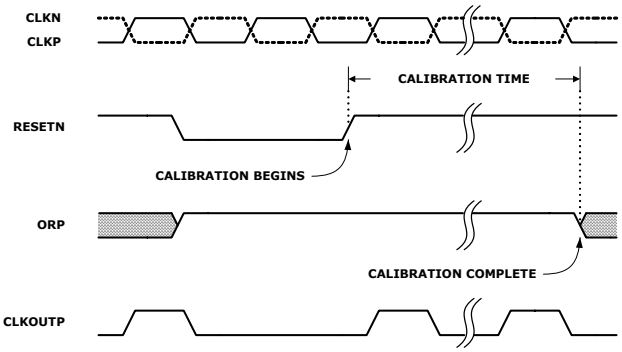

FIGURE 22. CALIBRATION TIMING

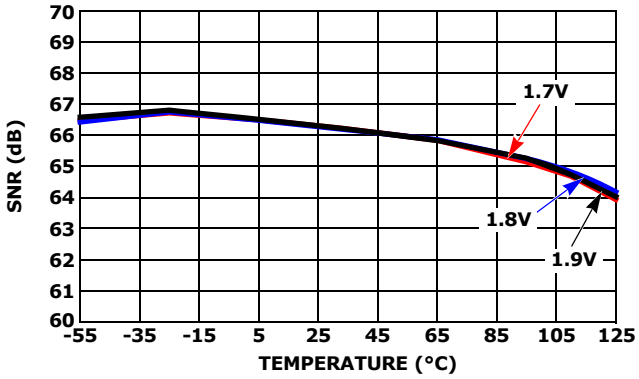

FIGURE 23. SNR PERFORMANCE vs TEMPERATURE (CAL DONE AT +25°C)

User-Initiated Reset

Recalibration of the ADC can be initiated at any time by driving the RESETN pin low for a minimum of one clock cycle. An open-drain driver with a drive strength of less than 0.5mA is recommended, RESETN has an internal high impedance pull-up to OVDD. As is the case during power-on reset, the SDO, RESETN and DNC pins must be in the proper state for the calibration to successfully execute.

The performance of the ISLA112P25MREP changes with variations in temperature, supply voltage or sample rate. The extent of these changes may necessitate recalibration, depending on system performance requirements. Best performance will be achieved by recalibrating the ADC under the environmental conditions at which it will operate. Note: To ensure device accuracy the measurement temperature is to be within 60°C of the calibration temperature.

A supply voltage variation of less than 100mV will generally result in an SNR change of less than 0.5dBFS and SFDR change of less than 3dBc.

In situations where the sample rate is not constant, best results will be obtained if the device is calibrated at the highest sample rate. Reducing the sample rate by less than 75MSPS will typically result in an SNR change of less than 0.5dBFS and an SFDR change of less than 3dBc.

Figures 23 and 24 show the effect of temperature on SNR and SFDR performance without recalibration. In each plot, the ADC is calibrated at +25°C and temperature is varied over the operating range without recalibrating. The average change in SNR/SFDR is shown, relative to the +25°C value.

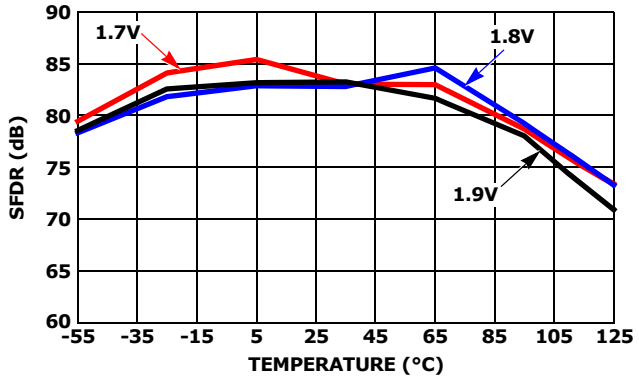

FIGURE 24. SFDR PERFORMANCE vs TEMPERATURE (CAL DONE AT +25°C)

Analog Input

The ADC core contains a fully differential input (VINP/VINN) to the sample and hold amplifier (SHA). The ideal full-scale input voltage is 1.45V, centered at the VCM voltage of 0.535V as shown in Figure 25.

Best performance is obtained when the analog inputs are driven differentially. The common-mode output voltage, VCM, should be used to properly bias the inputs as shown in Figures 26 through 28. An RF transformer will give the best noise and distortion performance for wideband and/or high intermediate frequency (IF) inputs. Two different transformer input schemes are shown in Figures 26 and 27.

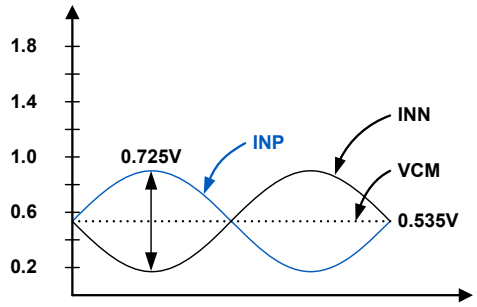

FIGURE 25. ANALOG INPUT RANGE

This dual transformer scheme is used to improve common-mode rejection, which keeps the common-mode level of the input matched to VCM. The value of the shunt resistor should be determined based on the desired load impedance. The differential input resistance of the ISLA112P25MREP is 1000Ω.

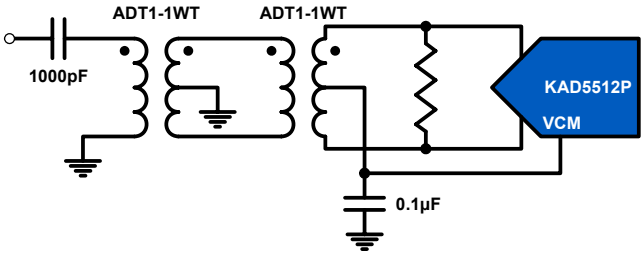

FIGURE 26. TRANSFORMER INPUT FOR GENERAL PURPOSE APPLICATIONS

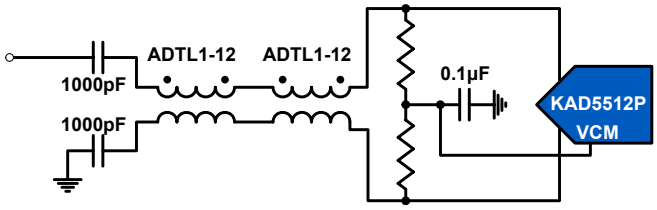

FIGURE 27. TRANSMISSION-LINE TRANSFORMER INPUT FOR HIGH IF APPLICATIONS

The SHA design uses a switched capacitor input stage (see Figure 41), which creates current spikes when the sampling capacitance is reconnected to the input voltage. This causes a disturbance at the input which must settle before the next sampling point. Lower source impedance will result in faster settling and improved performance. Therefore a 1:1 transformer and low shunt resistance are recommended for optimal performance.

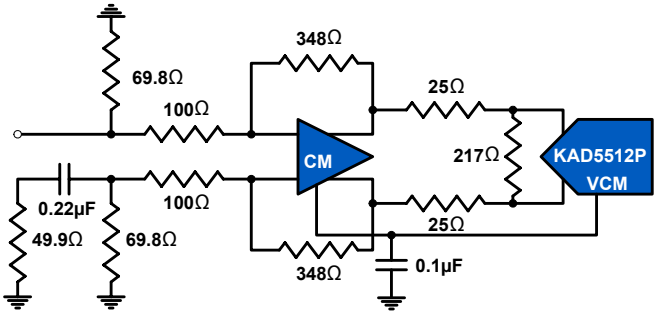

FIGURE 28. DIFFERENTIAL AMPLIFIER INPUT

A differential amplifier, as shown in Figure 28, can be used in applications that require DC-coupling. In this configuration, the amplifier will typically dominate the achievable SNR and distortion performance.

Clock Input

The clock input circuit is a differential pair (see Figure 42). Driving these inputs with a high level (up to 1.8V_{PP} on each input) sine or square wave will provide the lowest jitter performance. A transformer with 4:1 impedance ratio will provide increased drive levels.

The recommended drive circuit is shown in Figure 29. A duty range of 40% to 60% is acceptable. The clock can be driven single-ended, but this will reduce the edge rate and may impact SNR performance. The clock inputs are internally self-biased to AVDD/2 to facilitate AC coupling.

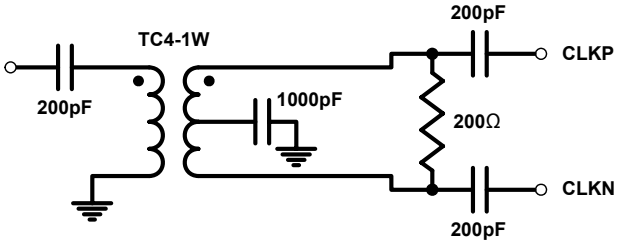

FIGURE 29. RECOMMENDED CLOCK DRIVE

A selectable 2x frequency divider is provided in series with the clock input. The divider can be used in the 2x mode with a sample clock equal to twice the desired sample rate. This allows the use of the Phase Slip feature, which enables synchronization of multiple ADCs.

TABLE 1. CLKDIV PIN SETTINGS

CLKDIV PIN	DIVIDE RATIO
AVSS	2
Float	1
AVDD	4

The clock divider can also be controlled through the SPI port, which overrides the CLKDIV pin setting. Details on this are contained in “Serial Peripheral Interface” on page 20.

A delay-locked loop (DLL) generates internal clock signals for various stages within the charge pipeline. If the frequency of the input clock changes, the DLL may take up to 52µs to regain lock at 250MSPS. The lock time is inversely proportional to the sample rate.

Jitter

In a sampled data system, clock jitter directly impacts the achievable SNR performance. The theoretical relationship between clock jitter (t_J) and SNR is shown in Equation 1 and is illustrated in Figure 30.

$$SNR = 20 \log_{10}\left(\frac{1}{2\pi f_{IN} t_J}\right) \quad \text{(EQ. 1)}$$

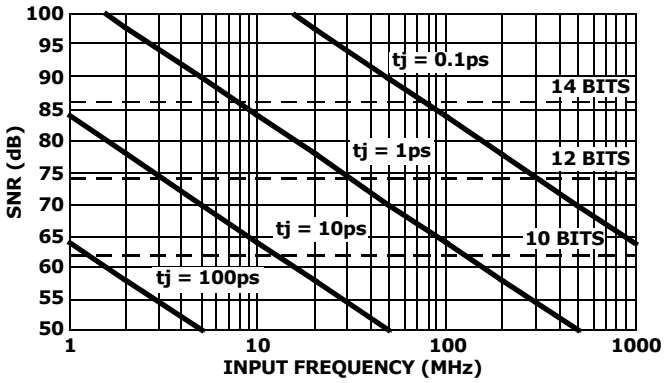

FIGURE 30. SNR vs CLOCK JITTER

This relationship shows the SNR that would be achieved if clock jitter were the only non-ideal factor. In reality, achievable SNR is limited by internal factors such as linearity, aperture jitter and thermal noise. Internal aperture jitter is the uncertainty in the sampling instant shown in Figure 1. The internal aperture jitter combines with the input clock jitter in a root-sum-square fashion, since they are not statistically correlated, and this determines the total jitter in the system. The total jitter, combined with other noise sources, then determines the achievable SNR.

Voltage Reference

A temperature compensated voltage reference provides the reference charges used in the successive approximation operations. The full-scale range of each A/D is proportional to the reference voltage. The voltage reference is internally bypassed and is not accessible to the user.

Digital Outputs

Output data is available as a parallel bus in LVDS-compatible or CMOS modes. Additionally, the data can be presented in either double data rate (DDR) or single data rate (SDR) formats. The even numbered data output pins are active in DDR mode. When CLKOUT is low the MSB and all odd logical bits are output, while on the high phase the LSB and all even logical bits are presented. Figures 1 and 2 show the timing relationships for LVDS/CMOS and DDR/SDR modes.

Additionally, the drive current for LVDS mode can be set to a nominal 3mA or a power-saving 2mA. The lower current setting can be used in designs where the receiver is in close physical proximity to the ADC. The applicability of this setting is dependent upon the PCB layout, therefore the user should experiment to determine if performance degradation is observed.

The output mode and LVDS drive current are selected via the OUTMODE pin as shown in Table 2.

TABLE 2. OUTMODE PIN SETTINGS

OUTMODE PIN	MODE
AVSS	LVCMOS
Float	LVDS, 3mA
AVDD	LVDS, 2mA

The output mode can also be controlled through the SPI port, which overrides the OUTMODE pin setting. Details on this are contained in “Serial Peripheral Interface” on page 20.

An external resistor creates the bias for the LVDS drivers. A 10kΩ, 1% resistor must be connected from the RLVDS pin to OVSS.

Over Range Indicator

The over range (OR) bit is asserted when the output code reaches positive full-scale (e.g. 0xFFF in offset binary mode). The output code does not wrap around during an over-range condition. The OR bit is updated at the sample rate.

Power Dissipation

The power dissipated by the ISLA112P25MREP is primarily dependent on the sample rate and the output modes: LVDS vs CMOS and DDR vs SDR. There is a static bias in the analog supply, while the remaining power dissipation is linearly related to the sample rate. The output supply dissipation is approximately constant in LVDS mode, but linearly related to the clock frequency in CMOS mode. Figures 34 and 35 illustrate these relationships.

Nap/Sleep

Portions of the device may be shut down to save power during times when operation of the ADC is not required. Two power saving modes are available: Nap, and Sleep. Nap mode reduces power dissipation to less than 95mW and recovers to normal operation in approximately 1µs. Sleep mode reduces power dissipation to less than 6mW but requires approximately 1ms to recover from a sleep command.

Wake-up time from sleep mode is dependent on the state of CSB; in a typical application CSB would be held high during sleep, requiring a user to wait 150µs max after CSB is asserted (brought low) prior to writing ‘001x’ to SPI Register 25. The device would be fully powered up, in normal mode 1ms after this command is written.

Wake-up from Sleep Mode Sequence (CSB high)

- Pull CSB Low
- Wait 150µs
- Write '001x' to Register 25
- Wait 1ms until ADC fully powered on

In an application where CSB was kept low in sleep mode, the 150µs CSB setup time is not required as the SPI registers are powered on when CSB is low, the chip power dissipation increases by ~ 15mW in this case. The 1ms wake-up time after the write of a '001x' to register 25 still applies. It is generally recommended to keep CSB high in sleep mode to avoid any unintentional SPI activity on the ADC.

All digital outputs (Data, CLKOUT and OR) are placed in a high impedance state during Nap or Sleep. The input clock should remain running and at a fixed frequency during Nap or Sleep, and CSB should be high. Recovery time from Nap mode will increase if the clock is stopped, since the internal DLL can take up to 52µs to regain lock at 250MSPS

By default after the device is powered on, the operational state is controlled by the NAPSLP pin as shown in Table 3.

TABLE 3. NAPSLP PIN SETTINGS

NAPSLP PIN	MODE
AVSS	Normal
Float	Sleep
AVDD	Nap

The power-down mode can also be controlled through the SPI port, which overrides the NAPSLP pin setting. Details on this are contained in "Serial Peripheral Interface" on page 20. This is an indexed function when controlled from the SPI, but a global function when driven from the pin.

Data Format

Output data can be presented in three formats: two's complement, Gray code and offset binary. The data format is selected via the OUTFMT pin as shown in Table 4.

TABLE 4. OUTFMT PIN SETTINGS

OUTFMT PIN	MODE
AVSS	Offset Binary
Float	Two's Complement
AVDD	Gray Code

The data format can also be controlled through the SPI port, which overrides the OUTFMT pin setting. Details on this are contained in "Serial Peripheral Interface" on page 20.

Offset binary coding maps the most negative input voltage to code 0x000 (all zeros) and the most positive input to 0xFFF (all ones). Two's complement coding simply complements the MSB of the offset binary representation.

When calculating Gray code the MSB is unchanged. The remaining bits are computed as the XOR of the current bit position and the next most significant bit. Figure 31 shows this operation.

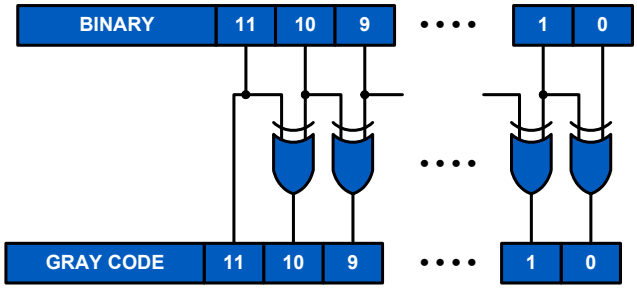

FIGURE 31. BINARY TO GRAY CODE CONVERSION

Converting back to offset binary from Gray code must be done recursively, using the result of each bit for the next lower bit as shown in Figure 32.

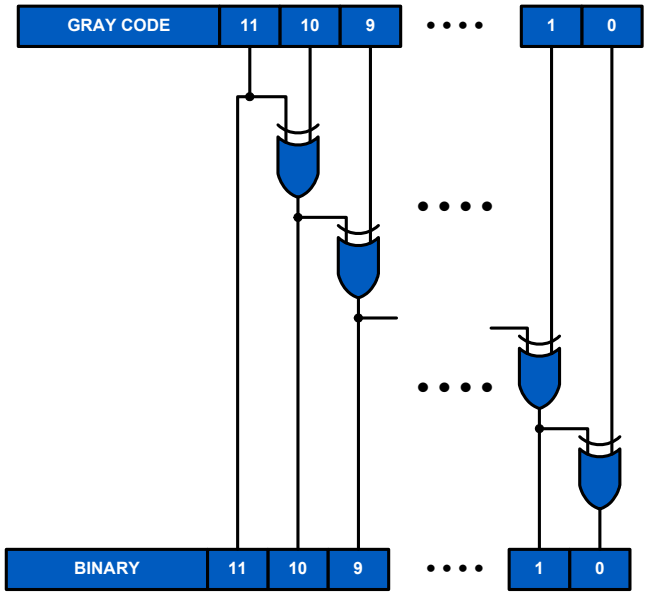

FIGURE 32. GRAY CODE TO BINARY CONVERSION

Mapping of the input voltage to the various data formats is shown in Table 5.

TABLE 5. INPUT VOLTAGE TO OUTPUT CODE MAPPING

INPUT VOLTAGE	OFFSET BINARY	TWO'S COMPLEMENT	GRAY CODE
–Full Scale	000 00 000 00 00	100 00 000 00 00	000 00 000 00 00
–Full Scale + 1LSB	000 00 000 00 01	100 00 000 00 01	000 00 000 00 01
Mid–Scale	100 00 000 00 00	000 00 000 00 00	110 00 000 00 00
+Full Scale – 1LSB	111 11 111 11 10	011 11 111 11 10	100 00 000 00 01
+Full Scale	111 11 111 11 11	011 11 111 111 1	100 00 000 00 00

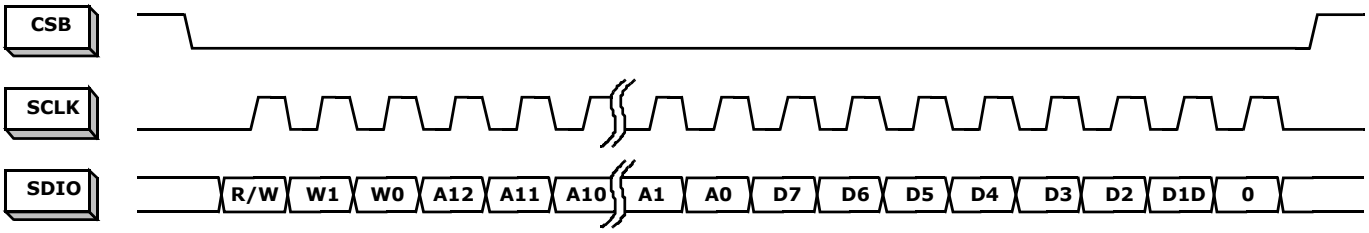

FIGURE 33. MSB-FIRST ADDRESSING

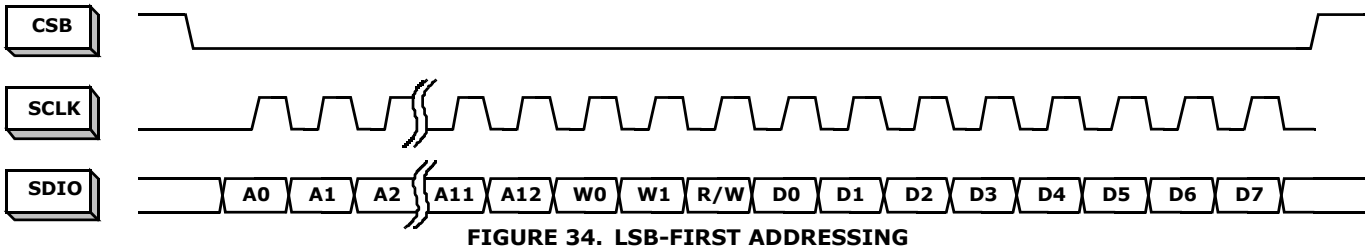

FIGURE 34. LSB-FIRST ADDRESSING

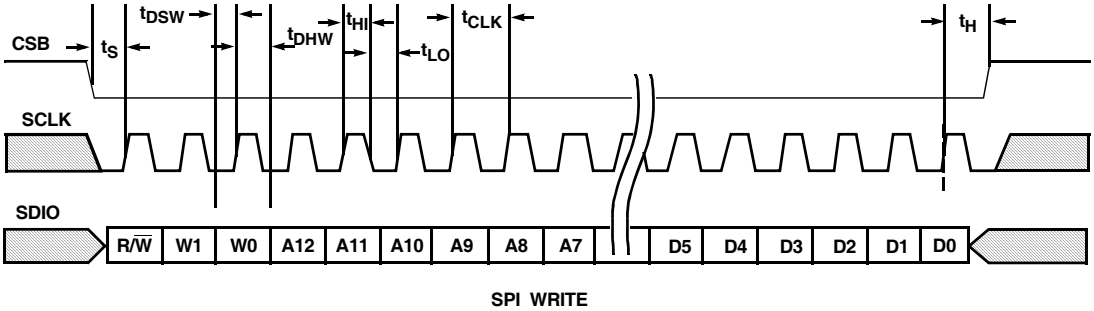

FIGURE 35. SPI WRITE

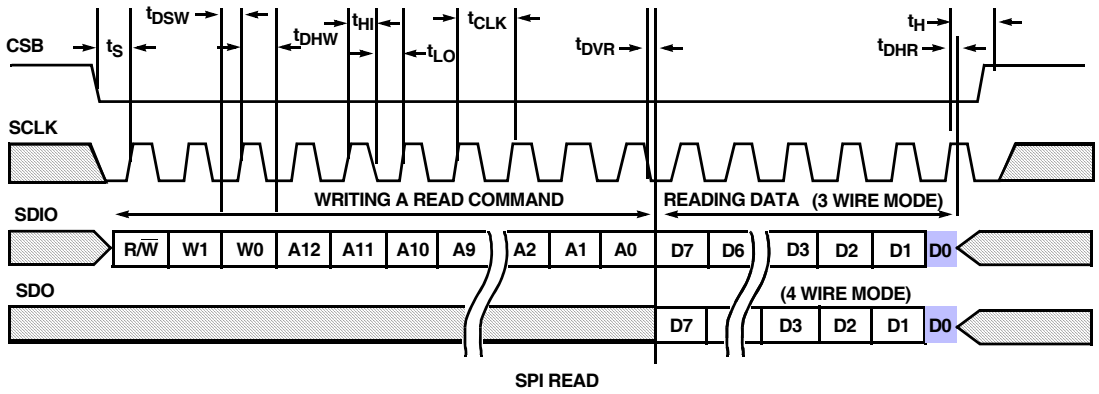

FIGURE 36. SPI READ

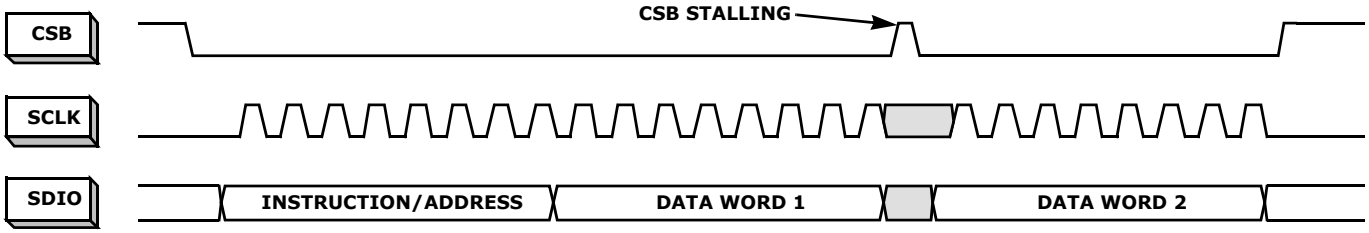

FIGURE 37. 2-BYTE TRANSFER

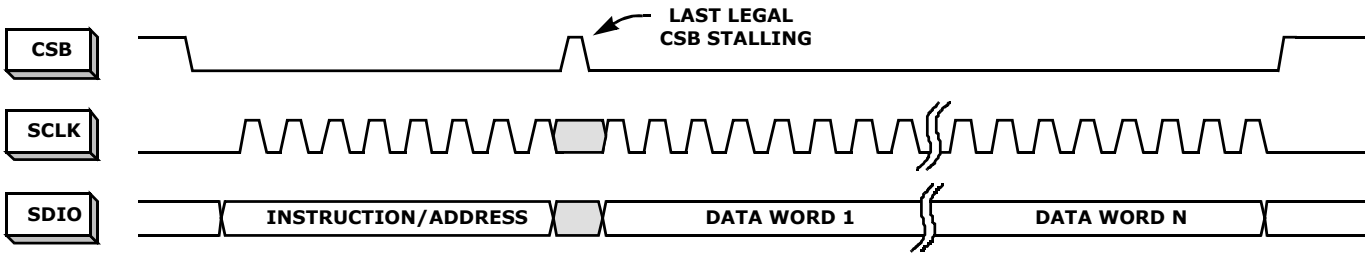

FIGURE 38. N-BYTE TRANSFER

Serial Peripheral Interface

A serial peripheral interface (SPI) bus is used to facilitate configuration of the device and to optimize performance. The SPI bus consists of chip select (CSB), serial clock (SCLK) serial data output (SDO), and serial data input/output (SDIO). The maximum SCLK rate is equal to the ADC sample rate (f_{SAMPLE}) divided by 16 for write operations and f_{SAMPLE} divided by 66 for reads. At f_{SAMPLE} = 250MHz, maximum SCLK is 15.63MHz for writing and 3.79MHz for read operations. There is no minimum SCLK rate.

The following sections describe various registers that are used to configure the SPI or adjust performance or functional parameters. Many registers in the available address space (0x00 to 0xFF) are not defined in this document. Additionally, within a defined register there may be certain bits or bit combinations that are reserved. Undefined registers and undefined values within defined registers are reserved and should not be selected. Setting any reserved register or value may produce indeterminate results.

SPI Physical Interface

The serial clock pin (SCLK) provides synchronization for the data transfer. By default, all data is presented on the serial data input/output (SDIO) pin in three-wire mode. The state of the SDIO pin is set automatically in the communication protocol (described below). A dedicated serial data output pin (SDO) can be activated by setting 0x00[7] high to allow operation in four-wire mode.

The SPI port operates in a half duplex master/slave configuration, with the ISLA112P25MREP functioning as a slave. Multiple slave devices can interface to a single master in three-wire mode only, since the SDO output of an unaddressed device is asserted in four-wire mode.

The chip-select bar (CSB) pin determines when a slave device is being addressed. Multiple slave devices can be written to concurrently, but only one slave device can be

read from at a given time (again, only in three-wire mode). If multiple slave devices are selected for reading at the same time, the results will be indeterminate.

The communication protocol begins with an instruction/address phase. The first rising SCLK edge following a high to low transition on CSB determines the beginning of the two-byte instruction/address command; SCLK must be static low before the CSB transition. Data can be presented in MSB-first order or LSB-first order. The default is MSB-first, but this can be changed by setting 0x00[6] high. Figures 33 and 34 show the appropriate bit ordering for the MSB-first and LSB-first modes, respectively. In MSB-first mode the address is incremented for multi-byte transfers, while in LSB-first mode it's decremented.

In the default mode the MSB is R/W, which determines if the data is to be read (active high) or written. The next two bits, W1 and W0, determine the number of data bytes to be read or written (see Table 6). The lower 13 bits contain the first address for the data transfer. This relationship is illustrated in Figure 35, and timing values are given in "Switching Specifications" on page 9.

After the instruction/address bytes have been read, the appropriate number of data bytes are written to or read from the ADC (based on the R/W bit status). The data transfer will continue as long as CSB remains low and SCLK is active. Stalling of the CSB pin is allowed at any byte boundary (instruction/address or data) if the number of bytes being transferred is three or less. For transfers of four bytes or more, CSB is allowed stall in the middle of the instruction/address bytes or before the first data byte. If CSB transitions to a high state after that point the state machine will reset and terminate the data transfer.

TABLE 6. BYTE TRANSFER SELECTION

[W1:W0]	BYTES TRANSFERRED
00	1
01	2
10	3
11	4 or more

Figures 37 and 38 illustrate the timing relationships for 2-byte and N-byte transfers, respectively. The operation for a 3-byte transfer can be inferred from these diagrams.

SPI Configuration

ADDRESS 0X00: CHIP_PORT_CONFIG

Bit ordering and SPI reset are controlled by this register. Bit order can be selected as MSB to LSB (MSB first) or LSB to MSB (LSB first) to accommodate various microcontrollers.

Bit 7 SDO Active

Bit 6 LSB First

Setting this bit high configures the SPI to interpret serial data as arriving in LSB to MSB order.

Bit 5 Soft Reset

Setting this bit high resets all SPI registers to default values.

Bit 4 Reserved

This bit should always be set high.

Bits 3:0 These bits should always mirror bits 4:7 to avoid ambiguity in bit ordering.

ADDRESS 0X02: BURST_END

If a series of sequential registers are to be set, burst mode can improve throughput by eliminating redundant addressing. In 3-wire SPI mode the burst is ended by pulling the CSB pin high. If the device is operated in 2-wire mode the CSB pin is not available. In that case, setting the burst_end address determines the end of the transfer. During a write operation, the user must be cautious to transmit the correct number of bytes based on the starting and ending addresses.

Bits 7:0 Burst End Address

This register value determines the ending address of the burst data.

Device Information

ADDRESS 0X08: CHIP_ID

ADDRESS 0X09: CHIP_VERSION

The generic die identifier and a revision number, respectively, can be read from these two registers.

Indexed Device Configuration/Control

ADDRESS 0X10: DEVICE_INDEX_A

A common SPI map, which can accommodate single-channel or multi-channel devices, is used for all Intersil ADC products. Certain configuration commands (identified as Indexed in the SPI map) can be executed on a per-converter basis. This register determines which converter is being addressed for an Indexed command. It is important to note that only a single converter can be addressed at a time.

This register defaults to 00h, indicating that no ADC is addressed. Therefore Bit 0 must be set high in order to execute any Indexed commands. Error code 'AD' is returned if any indexed register is read from without properly setting device_index_A.

ADDRESS 0X20: OFFSET_COARSE AND

ADDRESS 0X21: OFFSET_FINE

The input offset of the ADC core can be adjusted in fine and coarse steps. Both adjustments are made via an 8-bit word as detailed in Table 7.

The default value of each register will be the result of the self-calibration after initial power-up. If a register is to be

incremented or decremented, the user should first read the register value then write the incremented or decremented value back to the same register.

TABLE 7. OFFSET ADJUSTMENTS

PARAMETER	0x20[7:0] COARSE OFFSET	0x21[7:0] FINE OFFSET
Steps	255	255
–Full Scale (0x00)	-133LSB (-47mV)	-5LSB (-1.75mV)
Mid–Scale (0x80)	0.0LSB (0.0mV)	0.0LSB
+Full Scale (0xFF)	+133LSB (+47mV)	+5LSB (+1.75mV)
Nominal Step Size	1.04LSB (0.37mV)	0.04LSB (0.014mV)

ADDRESS 0X22: GAIN_COARSE

ADDRESS 0X23: GAIN_MEDIUM

ADDRESS 0X24: GAIN_FINE

Gain of the ADC core can be adjusted in coarse, medium and fine steps. Coarse gain is a 4-bit adjustment while medium and fine are 8-bit. Multiple Coarse Gain Bits can be set for a total adjustment range of +/- 4.2%. ('0011' =~ -4.2% and '1100' =~ +4.2%) It is recommended to use one of the coarse gain settings (-4.2%, -2.8%, -1.4%, 0, 1.4%, 2.8%, 4.2%) and fine-tune the gain using the registers at 23h and 24h.

The default value of each register will be the result of the self-calibration after initial power-up. If a register is to be incremented or decremented, the user should first read the register value then write the incremented or decremented value back to the same register.

TABLE 8. COARSE GAIN ADJUSTMENT

0x22[3:0]	NOMINAL COARSE GAIN ADJUST (%)
Bit3	+2.8
Bit2	+1.4
Bit1	-2.8
Bit0	-1.4

TABLE 9. MEDIUM AND FINE GAIN ADJUSTMENTS

PARAMETER	0x23[7:0] MEDIUM GAIN	0x24[7:0] FINE GAIN
Steps	256	256
–Full Scale (0x00)	-2%	-0.20%
Mid–Scale (0x80)	0.00%	0.00%
+Full Scale (0xFF)	+2%	+0.2%
Nominal Step Size	0.016%	0.0016%

ADDRESS 0X25: MODES

Two distinct reduced power modes can be selected. By default, the tri-level NAPSLP pin can select normal operation or sleep modes (refer to "Nap/Sleep" on page 17). This functionality can be overridden and controlled through the SPI. This is an indexed function when controlled from the SPI, but a global function when driven from the pin. This register is not changed by a Soft Reset.

TABLE 10. POWER-DOWN CONTROL

VALUE	0x25[2:0] POWER-DOWN MODE
000	Pin Control
001	Normal Operation
010	Nap Mode
100	Sleep Mode

Nap mode must be entered by executing the following sequence:

SEQUENCE	REGISTER	VALUE
1	0x10	0x01
2	0x25	0x02
3	0x10	0x02
4	0x25	0x02

Return to Normal operation as follows:

SEQUENCE	REGISTER	VALUE
1	0x10	0x01
2	0x25	0x01
3	0x10	0x02
4	0x25	0x01

Global Device Configuration/Control

ADDRESS 0X71: PHASE_SLIP

When using the clock divider, it's not possible to determine the synchronization of the incoming and divided clock phases. This is particularly important when multiple ADCs are used in a time-interleaved system. The phase slip feature allows the rising edge of the divided clock to be advanced by one input clock cycle when in CLK/4 mode, as shown in Figure 39. Execution of a phase_slip command is accomplished by first writing a '0' to bit 0 at address 71h followed by writing a '1' to bit 0 at address 71h (32 sclk cycles).

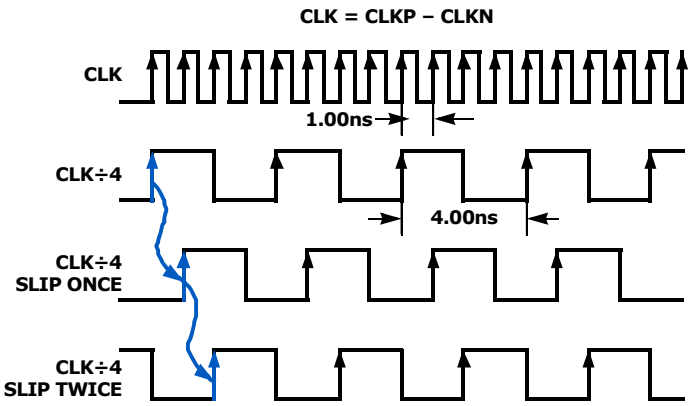

FIGURE 39. PHASE SLIP: CLK÷4 MODE, f_{CLOCK} = 1000MHz

ADDRESS 0X72: CLOCK_DIVIDE

The ISLA112P25MREP has a selectable clock divider that can be set to divide by four, two or one (no division). By default, the tri-level CLKDIV pin selects the divisor (refer to "Clock Input" on page 16). This functionality can be overridden and controlled through the SPI, as shown in Table 11. This register is not changed by a Soft Reset.

TABLE 11. CLOCK DIVIDER SELECTION

VALUE	0x72[2:0] CLOCK DIVIDER
000	Pin Control
001	Divide by 1
010	Divide by 2
100	Divide by 4

ADDRESS 0X73: OUTPUT_MODE_A

The output_mode_A register controls the physical output format of the data, as well as the logical coding. The ISLA112P25MREP can present output data in two physical formats: LVDS or LVCMOS. Additionally, the drive strength in LVDS mode can be set high (3mA) or low (2mA). By default, the tri-level OUTMODE pin selects the mode and drive level (refer to "Digital Outputs" on page 17). This functionality can be overridden and controlled through the SPI, as shown in Table 12.

Data can be coded in three possible formats: two's complement, Gray code or offset binary. By default, the tri-level OUTFMT pin selects the data format (refer to "Data Format" on page 18). This functionality can be overridden and controlled through the SPI, as shown in Table 13.

This register is not changed by a Soft Reset.

TABLE 12. OUTPUT MODE CONTROL

VALUE	0x93[7:5]
000	Pin Control
001	LVDS 2mA
010	LVDS 3mA
100	LVCMOS

TABLE 13. OUTPUT FORMAT CONTROL

VALUE	0x93[2:0] OUTPUT FORMAT
000	Pin Control
001	Two's Complement
010	Gray Code
100	Offset Binary

ADDRESS 0X74: OUTPUT_MODE_B

ADDRESS 0X75: CONFIG_STATUS

Bit 6 DLL Range

This bit sets the DLL operating range to fast (default) or slow.

Internal clock signals are generated by a delay-locked loop (DLL), which has a finite operating range. Table 14 shows the allowable sample rate ranges for the slow and fast settings.

TABLE 14. DLL RANGES

DLL RANGE	MIN	MAX	UNIT
Slow	40	100	MSPS
Fast	80	f_S MAX	MSPS

The output_mode_B and config_status registers are used in conjunction to enable DDR mode and select the frequency range of the DLL clock generator. The method of setting these options is different from the other registers.

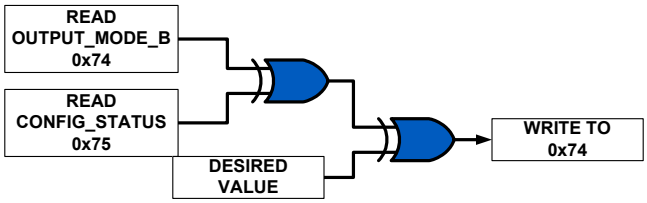

FIGURE 40. SETTING OUTPUT_MODE_B REGISTER

The procedure for setting output_mode_B is shown in Figure 40. Read the contents of output_mode_B and config_status and XOR them. Then XOR this result with the desired value for output_mode_B and write that XOR result to the register.

Device Test

The ISLA112P25MREP can produce preset or user defined patterns on the digital outputs to facilitate in-site

testing. A static word can be placed on the output bus, or two different words can alternate. In the alternate mode, the values defined as Word 1 and Word 2 (as shown in Table 15) are set on the output bus on alternating clock phases. The test mode is enabled asynchronously to the sample clock, therefore several sample clock cycles may elapse before the data is present on the output bus.

ADDRESS 0XC0: TEST_IO

Bits 7:6 User Test Mode

These bits set the test mode to static (0x00) or alternate (0x01) mode. Other values are reserved.

The four LSBs in this register (Output Test Mode) determine the test pattern in combination with registers 0xC2 through 0xC5. Refer to Table 16.

TABLE 15. OUTPUT TEST MODES

VALUE	0xC0[3:0] OUTPUT TEST MODE	WORD 1	WORD 2
0000	Off		
0001	Midscale	0x8000	N/A
0010	Positive Full-Scale	0xFFFF	N/A
0011	Negative Full-Scale	0x0000	N/A
0100	Checkerboard	0xAAAA	0x5555
0101	Reserved	N/A	N/A
0110	Reserved	N/A	N/A
0111	One/Zero	0xFFFF	0x0000
1000	User Pattern	user_patt1	user_patt2

ADDRESS 0XC2: USER_PATT1_LSB AND

ADDRESS 0XC3: USER_PATT1_MSB

These registers define the lower and upper eight bits, respectively, of the first user-defined test word.

ADDRESS 0XC4: USER_PATT2_LSB AND

ADDRESS 0XC5: USER_PATT2_MSB

These registers define the lower and upper eight bits, respectively, of the second user-defined test word.

For additional products, see www.intersil.com/product_tree

Intersil products are manufactured, assembled and tested utilizing ISO9000 quality systems as noted in the quality certifications found at www.intersil.com/design/quality

Intersil products are sold by description only. Intersil Corporation reserves the right to make changes in circuit design, software and/or specifications at any time without notice. Accordingly, the reader is cautioned to verify that data sheets are current before placing orders. Information furnished by Intersil is believed to be accurate and reliable. However, no responsibility is assumed by Intersil or its subsidiaries for its use; nor for any infringements of patents or other rights of third parties which may result from its use. No license is granted by implication or otherwise under any patent or patent rights of Intersil or its subsidiaries.

For information regarding Intersil Corporation and its products, see www.intersil.com

SPI Memory Map

TABLE 16. SPI MEMORY MAP

	ADDR (Hex)	PARAMETER NAME	BIT 7 (MSB)	BIT 6	BIT 5	BIT 4	BIT 3	BIT 2	BIT 1	Bit 0 (LSB)	DEF. VALUE (Hex)	INDEXED/ GLOBAL
SPI Config	00	port_config	SDO Active	LSB First	Soft Reset			Mirror (bit5)	Mirror (bit6)	Mirror (bit7)	00h	G
	01	reserved	Reserved									
	02	burst_end	Burst end address [7:0]								00h	G
	03-07	reserved	Reserved									
Info	08	chip_id	Chip ID #								Read only	G
	09	chip_version	Chip Version #								Read only	G
Indexed Device Config/Control	10	device_index_A	Reserved							ADC00	00h	I
	11-1F	reserved	Reserved									
	20	offset_coarse	Coarse Offset								cal. value	I
	21	offset_fine	Fine Offset								cal. value	I
	22	gain_coarse	Reserved				Coarse Gain				cal. value	I
	23	gain_medium	Medium Gain								cal. value	I
	24	gain_fine	Fine Gain								cal. value	I
	25	modes	Reserved					**Power-Down Mode [2:0]** **000 = Pin Control** **001 = Normal Operation** **010 = Nap** **100 = Sleep** **other codes = reserved**			00h NOT affected by Soft Reset	I
	26-5F	reserved	Reserved									
	60-6F	reserved	Reserved									
Global Device Config/Control	70	reserved	Reserved									
	71	phase_slip	Reserved							Next Clock Edge	00h	G
	72	clock_divide						**Clock Divide [2:0]** **000 = Pin Control** **001 = divide by 1** **010 = divide by 2** **100 = divide by 4** **other codes = reserved**			00h NOT affected by Soft Reset	G
	73	output_mode_A	**Output Mode [2:0]** **000 = Pin Control** **001 = LVDS 2mA** **010 = LVDS 3mA** **100 = LVCMOS** **other codes = reserved**					**Output Format [2:0]** **000 = Pin Control** **001 = Twos Complement** **010 = Gray Code** **100 = Offset Binary** **other codes = reserved**			00h NOT affected by Soft Reset	G
	74	output_mode_B		**DLL Range** 0 = fast 1 = slow		DDR Enable (Note 16)					00h NOT affected by Soft Reset	G
	75	config_status		XOR Result		XOR Result					Read Only	G
	76-BF	reserved	Reserved									

TABLE 16. SPI MEMORY MAP (Continued)

	ADDR (Hex)	PARAMETER NAME	BIT 7 (MSB)	BIT 6	BIT 5	BIT 4	BIT 3	BIT 2	BIT 1	Bit 0 (LSB)	DEF. VALUE (Hex)	INDEXED/ GLOBAL
Device Test	C0	test_io	**User Test Mode [1:0]** 00 = Single 01 = Alternate 10 = Reserved 11 = Reserved				**Output Test Mode [3:0]** 0 = Off 1 = Midscale Short 2 = +FS Short 3 = -FS Short 4 = Checker Board 5 = Reserved 6 = Reserved		7 = One/Zero Word Toggle 8 = User Input 9-15 = Reserved		00h	G
	C1	Reserved	Reserved								00h	G
	C2	user_patt1_lsb	B7	B6	B5	B4	B3	B2	B1	B0	00h	G
	C3	user_patt1_msb	B15	B14	B13	B12	B11	B10	B9	B8	00h	G
	C4	user_patt2_lsb	B7	B6	B5	B4	B3	B2	B1	B0	00h	G
	C5	user_patt2_msb	B15	B14	B13	B12	B11	B10	B9	B8	00h	G
	C6-FF	Reserved	Reserved									

NOTE:
16. At power-up, the DDR Enable bit is at a logic '0' for the 72 pin package and set to a logic '1' internally for the 48 pin package by an internal pull-up.

Equivalent Circuits

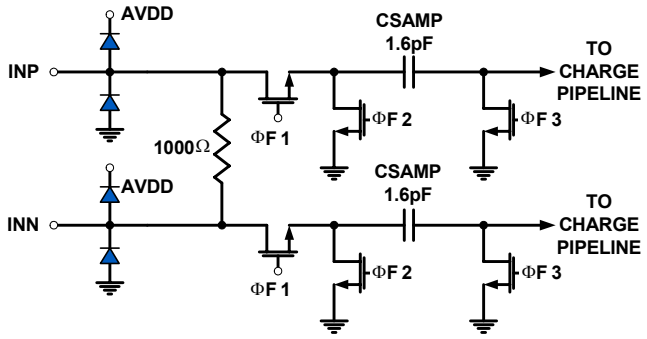

FIGURE 41. ANALOG INPUTS

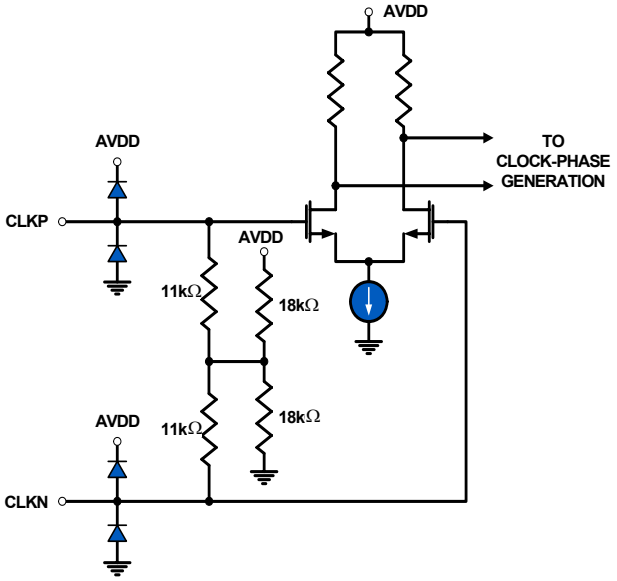

FIGURE 42. CLOCK INPUTS

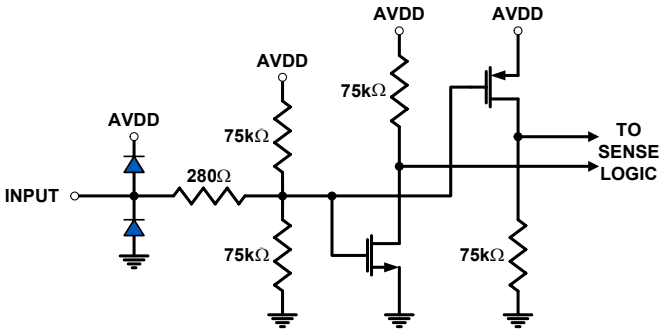

FIGURE 43. TRI-LEVEL DIGITAL INPUTS

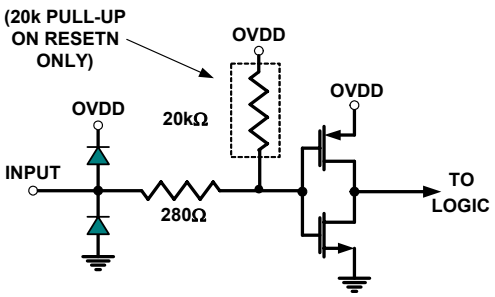

FIGURE 44. DIGITAL INPUTS

Equivalent Circuits (Continued)

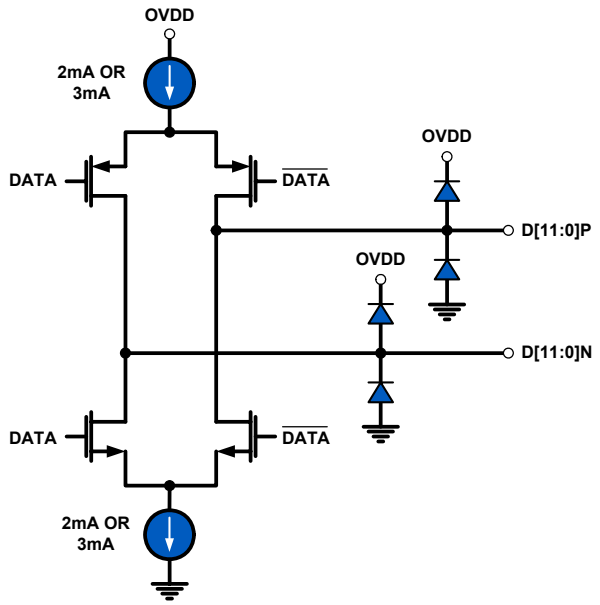

FIGURE 45. LVDS OUTPUTS

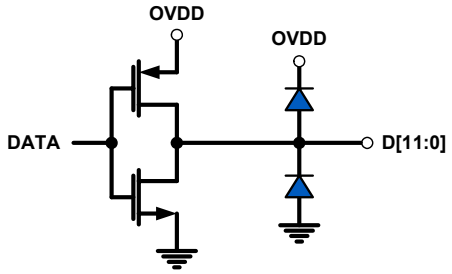

FIGURE 46. CMOS OUTPUTS

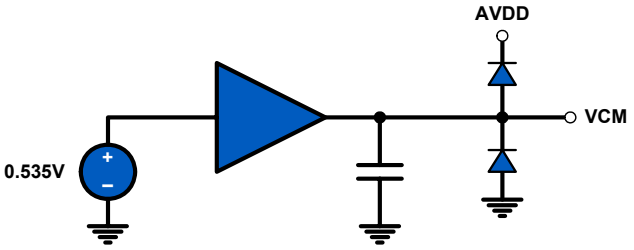

FIGURE 47. VCM_OUT OUTPUT

ADC Evaluation Platform

Intersil offers an ADC Evaluation platform which can be used to evaluate the KADxxxxx ADC family. The platform consists of a FPGA based data capture motherboard and a family of ADC daughter cards. This USB based platform allows a user to quickly evaluate the functioning of the ISLA112P25MREP at room temperature with the KAD5512P-25Q72 based daughter card at a user's specific application frequency requirements. More information is available at:
http://www.intersil.com/converters/adc_eval_platform/

Layout Considerations

Split Ground and Power Planes

Data converters operating at high sampling frequencies require extra care in PC board layout. Many complex board designs benefit from isolating the analog and digital sections. Analog supply and ground planes should be laid out under signal and clock inputs. Locate the digital planes under outputs and logic pins. Grounds should be joined under the chip.

Clock Input Considerations

Use matched transmission lines to the transformer inputs for the analog input and clock signals. Locate transformers and terminations as close to the chip as possible.

Exposed Paddle

The exposed paddle must be electrically connected to analog ground (AVSS) and should be connected to a large copper plane using numerous vias for optimal thermal performance.

Bypass and Filtering

Bulk capacitors should have low equivalent series resistance. Tantalum is a good choice. For best performance, keep ceramic bypass capacitors very close to device pins. Longer traces will increase inductance, resulting in diminished dynamic performance and accuracy. Make sure that connections to ground are direct and low impedance. Avoid forming ground loops.

LVDS Outputs

Output traces and connections must be designed for 50Ω (100Ω differential) characteristic impedance. Keep traces

direct and minimize bends where possible. Avoid crossing ground and power-plane breaks with signal traces.

LVCMOS Outputs

Output traces and connections must be designed for 50Ω characteristic impedance.

Unused Inputs

Standard logic inputs (RESETN, CSB, SCLK, SDIO, SDO) which will not be operated do not require connection to ensure optimal ADC performance. These inputs can be left floating if they are not used. Tri-level inputs (NAPSLP, OUTMODE, OUTFMT, CLKDIV) accept a floating input as a valid state, and therefore should be biased according to the desired functionality.

Definitions

Analog Input Bandwidth is the analog input frequency at which the spectral output power at the fundamental frequency (as determined by FFT analysis) is reduced by 3dB from its full-scale low-frequency value. This is also referred to as Full Power Bandwidth.

Aperture Delay or Sampling Delay is the time required after the rise of the clock input for the sampling switch to open, at which time the signal is held for conversion.

Aperture Jitter is the RMS variation in aperture delay for a set of samples.

Clock Duty Cycle is the ratio of the time the clock wave is at logic high to the total time of one clock period.

Differential Non-Linearity (DNL) is the deviation of any code width from an ideal 1 LSB step.

Effective Number of Bits (ENOB) is an alternate method of specifying Signal to Noise-and-Distortion Ratio (SINAD). In dB, it is calculated as:
ENOB = (SINAD - 1.76)/6.02

Gain Error is the ratio of the difference between the voltages that cause the lowest and highest code transitions to the full-scale voltage less 2 LSB. It is typically expressed in percent.

Integral Non-Linearity (INL) is the maximum deviation of the ADC's transfer function from a best fit line determined by a least squares curve fit of that transfer function, measured in units of LSBs.

Least Significant Bit (LSB) is the bit that has the smallest value or weight in a digital word. Its value in terms of input voltage is $V_{FS}/(2^N-1)$ where N is the resolution in bits.

Missing Codes are output codes that are skipped and will never appear at the ADC output. These codes cannot be reached with any input value.

Most Significant Bit (MSB) is the bit that has the largest value or weight.

Pipeline Delay is the number of clock cycles between the initiation of a conversion and the appearance at the output pins of the data.

Power Supply Rejection Ratio (PSRR) is the ratio of the observed magnitude of a spur in the ADC FFT, caused by an AC signal superimposed on the power supply voltage.

Signal to Noise-and-Distortion (SINAD) is the ratio of the RMS signal amplitude to the RMS sum of all other spectral components below one half the clock frequency, including harmonics but excluding DC.

Signal-to-Noise Ratio (without Harmonics) is the ratio of the RMS signal amplitude to the RMS sum of all other spectral components below one-half the sampling frequency, excluding harmonics and DC.

SNR and SINAD are either given in units of dB when the power of the fundamental is used as the reference, or dBFS (dB to full scale) when the converter's full-scale input power is used as the reference.

Spurious-Free-Dynamic Range (SFDR) is the ratio of the RMS signal amplitude to the RMS value of the largest spurious spectral component. The largest spurious spectral component may or may not be a harmonic.

Revision History

The revision history provided is for informational purposes only and is believed to be accurate, but not warranted. Please go to web to make sure you have the latest Rev.

DATE	REVISION	CHANGE
6/25/10	FN7646.0	Initial Release

Products

Intersil Corporation is a leader in the design and manufacture of high-performance analog semiconductors. The Company's products address some of the industry's fastest growing markets, such as, flat panel displays, cell phones, handheld products, and notebooks. Intersil's product families address power management and analog signal processing functions. Go to www.intersil.com/products for a complete list of Intersil product families.

For a complete listing of Applications, Related Documentation and Related Parts, please see the respective device information page on intersil.com: ISLA112P25MREP

To report errors or suggestions for this datasheet, please go to www.intersil.com/askourstaff

FITs are available from our website at http://rel.intersil.com/reports/search.php

Package Outline Drawing

L72.10x10D

72 LEAD QUAD FLAT NO-LEAD PLASTIC PACKAGE
Rev 1, 11/08

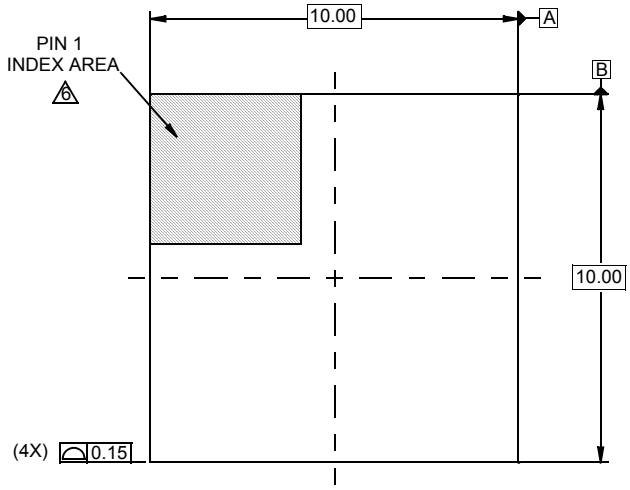

TOP VIEW

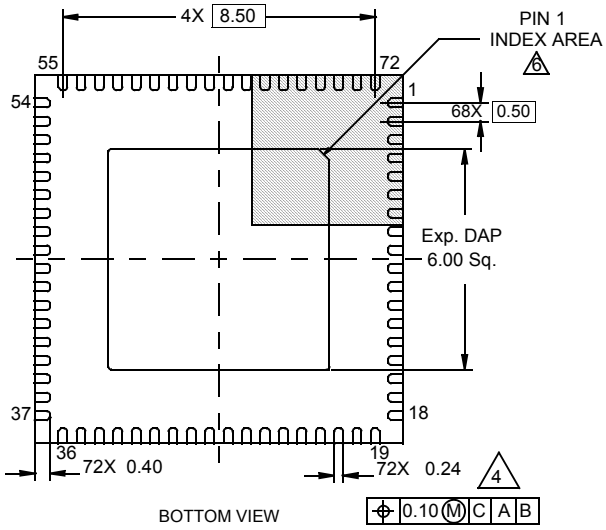

BOTTOM VIEW

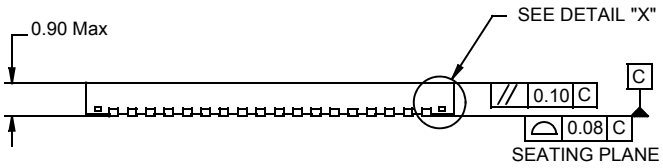

SIDE VIEW

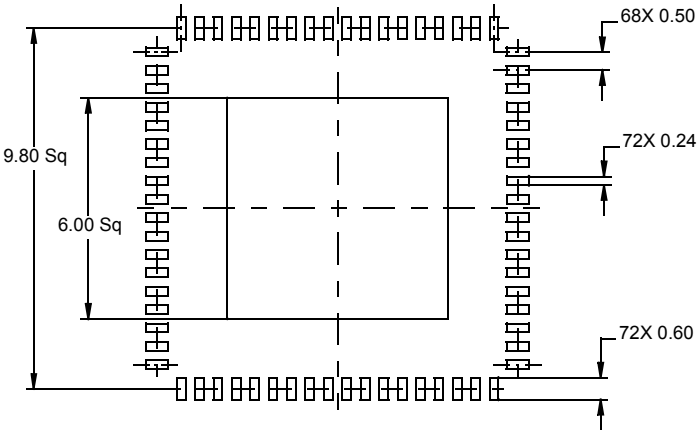

TYPICAL RECOMMENDED LAND PATTERN

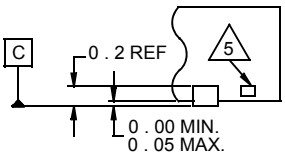

DETAIL "X"

NOTES:

1. Dimensions are in millimeters.
   Dimensions in ( ) for Reference Only.
2. Dimensioning and tolerancing conform to AMSEY14.5m-1994.
3. Unless otherwise specified, tolerance : Decimal ± 0.05
4. Dimension b applies to the metallized terminal and is measured between 0.15mm and 0.30mm from the terminal tip.
5. Tiebar shown (if present) is a non-functional feature.
6. The configuration of the pin #1 identifier is optional, but must be located within the zone indicated. The pin #1 identifier may be either a mold or mark feature.