LinkCom Manufacturing Co., Ltd

Model NO.	LCCE-025■122	Model Name	Constant Current Power Supply
Part NO.	PLCCE0025■122	SIZE	134 * 42 * 33.1 mm【5.28 * 1.65 * 1.3 inch】

FEATURES

- ◆ AC Input 90~305Vac
- ◆ Protection: SCP / OVP / OCP
- ◆ High Operating ambient Temp: -20℃ ~ +60℃
- ◆ Power Factor:>0.95@115Vac;>0.9@230Vac;@full load
- ◆ Safety: UL / TUV / CB / PSE / CQC
- ◆ EMC: CE / FCC
- ◆ Comply with Indoor/Outdoor Waterproof (IP 67)
- ◆ Dimension (L*W*H): 134 * 42 * 33.1 mm
- ◆ Dimension (L*W*H): 5.28 * 1.65 * 1.3 inch
- ◆ ROHS Compliant

Module : LCCE-025■122 ***,# =SEE NOTES BELOW**

*8	MODEL / SPECIFICATION	LCCE-025■122		
		min.	norm.	max.
	DC OUTPUT VOLTAGE (V)	15		21
*	PRESET ACCURACY (%) *(7)		1	
*	OUTPUT CURRENT(A) *(5)		1.2	
*	O/P NOISE (P-P, V) *(3)			4
*	LINE REGULATION (%) *(6)		1	
	LOAD REGULATION (%)		1	
	DC OUTPUT POWER	25.2 W		
	EFFICIENCY(typ @Full Load)	80%		
	INPUT VOLTAGE RANGE	90-305VAC, 127-431VDC, Normal：100-277VAC		
	INPUT FREQUENCY	Range:47-63Hz, Normal：50-60Hz		
	ACTIVE POWER FACTOR	PF>0.95@115VAC , PF>0.9 @230VAC at full load and rated output voltage		
	INRUSH CURRENT (typ)	COLD START 10A @ 230VAC		
	AC CURRENT	0.4A/115VAC 0.2A/230VAC		
	LEAKAGE CURRENT	<0.7mA/240VAC		
	SHORT CIRCUIT PROTECTION	short circuit protection will restart automatically after the fault condition is removed		
	OVER CURRENT PROTECTION	Constant Current		
	OVER V, PROTECTION	Shut down and latch off o/p voltage , re-power on to recover		
*	OPERATING TEMP.*(4)	-20 to +60℃@full load		
	STORAGE TEMPERATURE	-40 to +80℃		
	RELATIVE HUMIDITY	10 to +90%, non-cond.		
	TEMP. COEFFICIENT	0.03% / ℃ (0-50℃, typ)		
	SAFETY	UL 60950-1 / TUV EN61347-2-13 / CB / PSE / CQC		
	EMI	CE EN55015 / FCC part 18		
	DIMENSIONS(L*W*H)	134 * 42 * 33.1 mm【5.28 * 1.65 * 1.3 inch】		

NOTES：(1)All parameters not specially mentioned are measured 230VAC input.
(2)All specifications Typical @25℃, unless otherwise noted, at normal line and load.
(3)Ripple and Noise measured directly at pins/terminals at nom. load, 0.1uF bypass and 47uF electrolytic, pk-pk @20MHz bandwidth.
(4)Specified for free-air convection cooling.
(5)Minimum load is NOT required for proper operation .
(7)Line regulation measured from 100VAC to 277VAC.
(8)Preset accuracy measured at normal load, 120VAC input.
(9)100% Production Tested.

Model NO.	LCCE-025■122	Model Name	Constant Current Power Supply
Part NO.	PLCCE0025■122	SIZE	134 * 42 * 33.1 mm【5.28 * 1.65 * 1.3 inch】

Dimensions

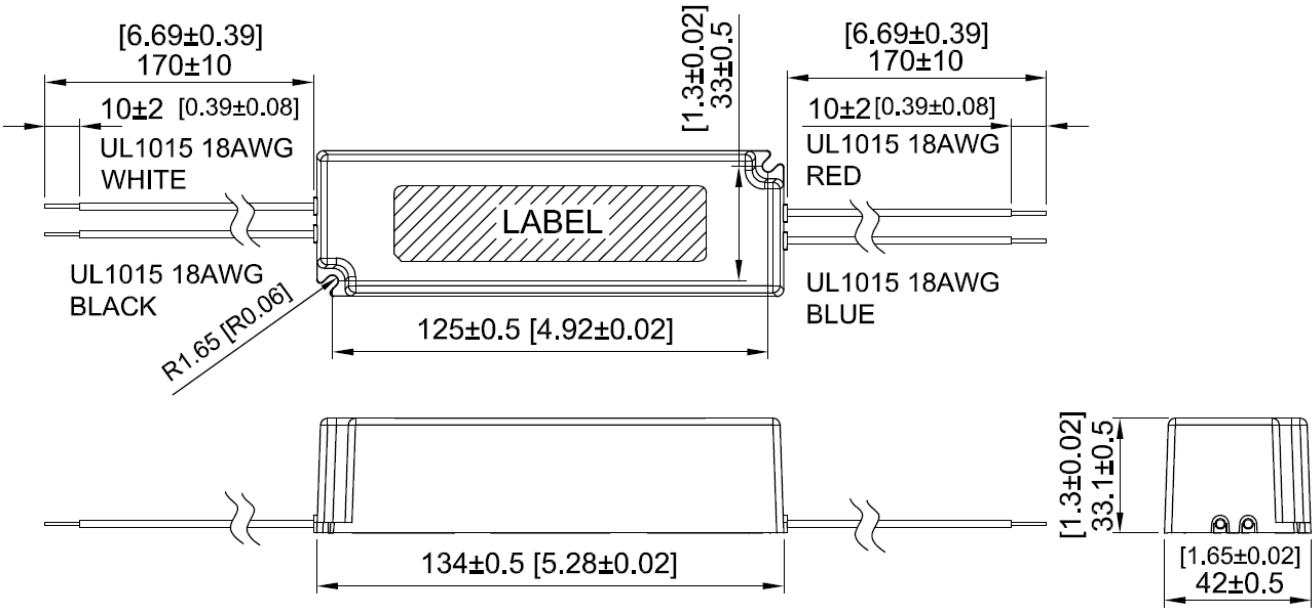

Unit：mm【inch】

※Reference