RECTRON
SEMICONDUCTOR
TECHNICAL SPECIFICATION

FM320 THRU FM3100

SURFACE MOUNT SCHOTTKY BARRIER RECTIFIER

VOLTAGE RANGE 20 to 100 Volts CURRENT 3.0 Amperes

FEATURES

* Ideal for surface mounted applications
* Low leakage current
* Metallurgically bonded construction
* Mounting position: Any
* Weight: 0.24 gram

MECHANICAL DATA

* Epoxy: Device has UL flammability classification 94V-O

DO-214AB

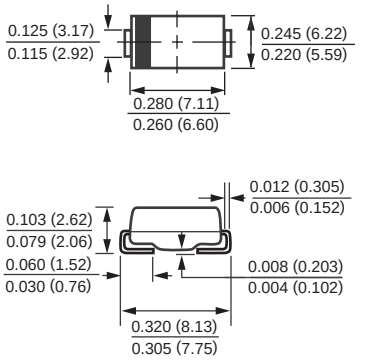

Dimensions in inches and (millimeters)

MAXIMUM RATINGS AND ELECTRICAL CHARACTERISTICS

Ratings at 25 °C ambient temperature unless otherwise specified.
Single phase, half wave, 60 Hz, resistive or inductive load.
For capacitive load, derate current by 20%.

MAXIMUM RATINGS (At T_A = 25°C unless otherwise noted)

RATINGS	SYMBOL	FM320	FM330	FM340	FM350	FM360	FM380	FM3100	UNITS
Maximum Recurrent Peak Reverse Voltage	V_{RRM}	20	30	40	50	60	80	100	Volts
Maximum RMS Voltage	V_{RMS}	14	21	28	35	42	56	70	Volts
Maximum DC Blocking Voltage	V_{DC}	20	30	40	50	60	80	100	Volts
Maximum Average Forward Rectified Current at Derating Lead Temperature	I_O	3.0							Amps
Peak Forward Surge Current 8.3 ms single half sine-wave superimposed on rated load (JEDEC method)	I_{FSM}	80							Amps
Typical Thermal Resistance (Note 1)	$R_{\theta JA}$	25							°C/W
Typical Junction Capacitance (Note 2)	C_J	200							pF
Operating Temperature Range	T_J	-55 to + 125			-55 to + 150				°C
Storage Temperature Range	T_{STG}	-55 to + 150							°C

ELECTRICAL CHARACTERISTICS (At T_A = 25°C unless otherwise noted)

CHARACTERISTICS		SYMBOL	FM320	FM330	FM340	FM350	FM360	FM380	FM3100	UNITS
Maximum Instantaneous Forward Voltage at 3.0A DC		V_F	.55			.75		.85		Volts
Maximum Average Reverse Current	@T_A = 25°C	I_R	2.0							mAmps
at Rated DC Blocking Voltage	@T_A = 100°C		20							mAmps

NOTES : 1. Thermal Resistance (Junction to Ambient).
2. Measured at 1 MHz and applied reverse voltage of 4.0 volts.
3. P.C.B Monuted with 0.4X0.4" (10.0X10.0mm²) copper pad area.

RATING AND CHARACTERISTIC CURVES (FM320 THRU FM3100)

FIG. 1 - TYPICAL FORWARD CURRENT DERATING CURVE

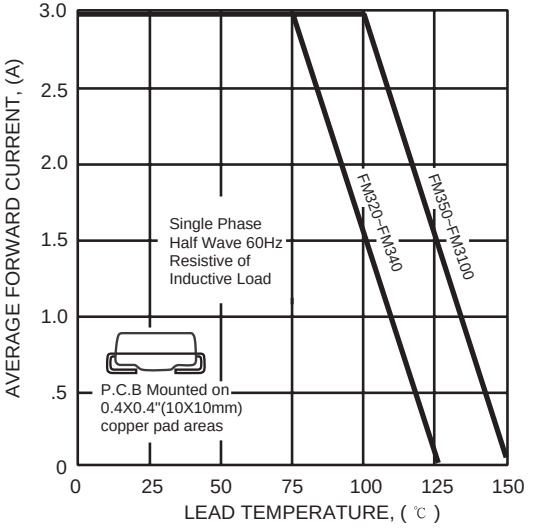

FIG. 2 - TYPICAL REVERSE CHARACTERISTICS

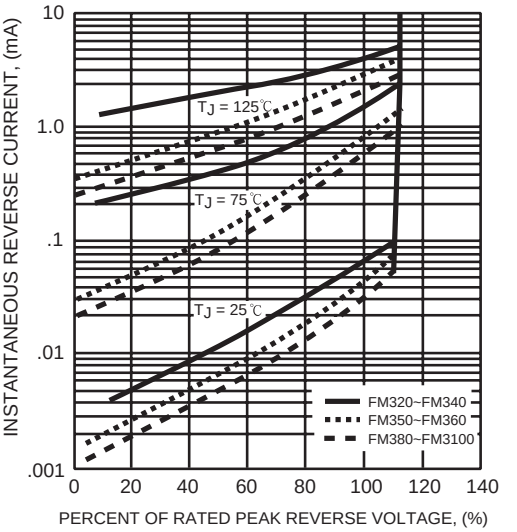

FIG. 3 - TYPICAL INSTANTANEOUS FORWARD CHARACTERISTICS

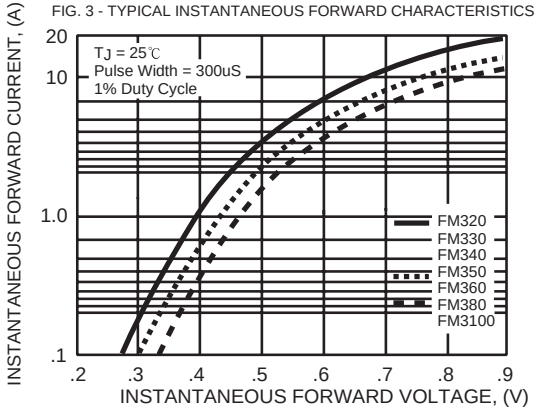

FIG. 4 - TYPICAL JUNCTION CAPACITANCE

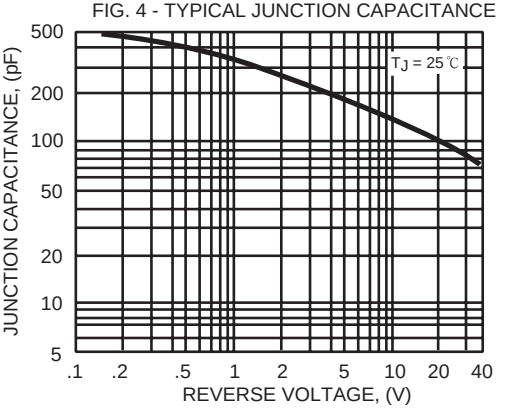
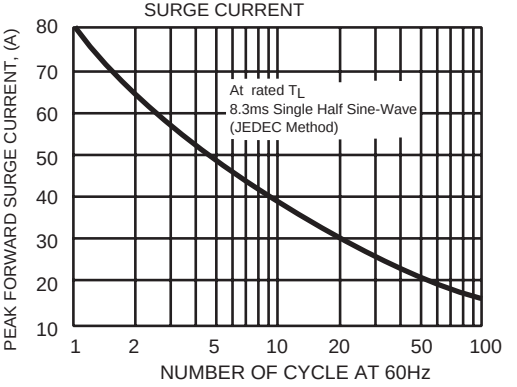
FIG. 5 - MAXIMUM NON-REPETITIVE FORWARD SURGE CURRENT