SONY

ICX249AL

Diagonal 8mm (Type 1/2) CCD Image Sensor for CCIR Black-and-White Video Cameras

Description

The ICX249AL is an interline CCD solid-state image sensor suitable for CCIR black-and-white video cameras with a diagonal 8mm (Type 1/2) system. Sensitivity, smear, D-range, S/N and other characteristics from visible light area to near infrared light area, have been greatly improved compared with the ICX039DLA through the adoption of EXview HAD CCD™ technology.

This chip features a field period readout system and an electronic shutter with variable charge-storage time.

This chip is compatible with and can replace the ICX039DLA.

20 pin DIP (Cer-DIP)

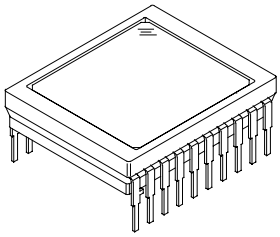

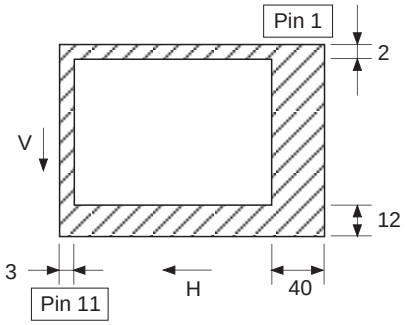

Optical black position (Top View)

Features

- Sensitivity in the near infrared light area (+12dB compared with the ICX039DLA, λ = 945nm)
- High sensitivity (+9dB compared with the ICX039DLA, without IR cut filter)
- Low smear (–15dB compared with the ICX039DLA)
- High D range (+2dB compared with the ICX039DLA)
- High S/N
- High resolution and low dark current
- Excellent antiblooming characteristics
- Continuous variable-speed shutter
- Substrate bias: Adjustment free (external adjustment also possible with 6 to 14V)
- Reset gate pulse: 5Vp-p adjustment free (drive also possible with 0 to 9V)
- Horizontal register: 5V drive

Device Structure

- Interline CCD image sensor
- Image size: Diagonal 8mm (Type 1/2)
- Number of effective pixels: 752 (H) × 582 (V) approx. 440K pixels
- Total number of pixels: 795 (H) × 596 (V) approx. 470K pixels
- Chip size: 7.95mm (H) × 6.45mm (V)
- Unit cell size: 8.6µm (H) × 8.3µm (V)
- Optical black: Horizontal (H) direction: Front 3 pixels, rear 40 pixels
  Vertical (V) direction: Front 12 pixels, rear 2 pixels
- Number of dummy bits: Horizontal 22
  Vertical 1 (even fields only)
- Substrate material: Silicon

EXview HAD CCD™

* EXview HAD CCD is a trademark of Sony Corporation EXview HAD CCD is a CCD that drastically improves light efficiency by including near infrared light region as a basic structure of HAD (Hole-Accnmulation Diode) sensor.

Sony reserves the right to change products and specifications without prior notice. This information does not convey any license by any implication or otherwise under any patents or other right. Application circuits shown, if any, are typical examples illustrating the operation of the devices. Sony cannot assume responsibility for any problems arising out of the use of these circuits.

Block Diagram and Pin Configuration

(Top View)

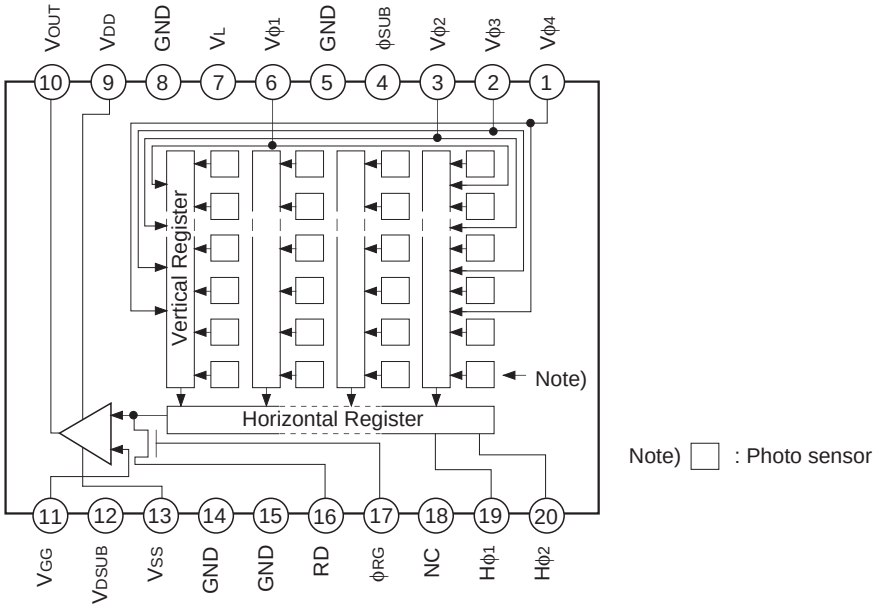

Pin Description

Pin No.	Symbol	Description	Pin No.	Symbol	Description
1	$V\phi_4$	Vertical register transfer clock	11	V_{GG}	Output circuit gate bias
2	$V\phi_3$	Vertical register transfer clock	12	V_{DSUB}	Substrate bias circuit supply voltage
3	$V\phi_2$	Vertical register transfer clock	13	V_{SS}	Output circuit source
4	ϕ_{SUB}	Substrate clock	14	GND	GND
5	GND	GND	15	GND	GND
6	$V\phi_1$	Vertical register transfer clock	16	RD	Reset drain bias
7	V_L	Protective transistor bias	17	ϕ_{RG}	Reset gate clock
8	GND	GND	18	NC	
9	V_{DD}	Output circuit supply voltage	19	$H\phi_1$	Horizontal register transfer clock
10	V_{OUT}	Signal output	20	$H\phi_2$	Horizontal register transfer clock

Absolute Maximum Ratings

Item		Ratings	Unit	Remarks
Substrate clock ϕ_{SUB} – GND		–0.3 to +50	V	
Supply voltage	V_{DD}, V_{RD}, V_{DSUB}, V_{OUT}, V_{SS} – GND	–0.3 to +18	V	
	V_{DD}, V_{RD}, V_{DSUB}, V_{OUT}, V_{SS} – ϕ_{SUB}	–55 to +10	V	
Clock input voltage	$V\phi_1$, $V\phi_2$, $V\phi_3$, $V\phi_4$ – GND	–15 to +20	V	
	$V\phi_1$, $V\phi_2$, $V\phi_3$, $V\phi_4$ – ϕ_{SUB}	to +10	V	
Voltage difference between vertical clock input pins		to +15	V	*1
Voltage difference between horizontal clock input pins		to +17	V	
$H\phi_1$, $H\phi_2$ – $V\phi_4$		–17 to +17	V	
ϕ_{RG}, V_{GG} – GND		–10 to +15	V	
ϕ_{RG}, V_{GG} – ϕ_{SUB}		–55 to +10	V	
V_L – ϕ_{SUB}		–65 to +0.3	V	
Pins other than GND and ϕ_{SUB} – V_L		–0.3 to +30	V	
Storage temperature		–30 to +80	°C	
Operating temperature		–10 to +60	°C	

*1 +27V (Max.) when clock width < 10µs, clock duty factor < 0.1%.

Bias Conditions 1 [when used in substrate bias internal generation mode]

Item	Symbol	Min.	Typ.	Max.	Unit	Remarks
Output circuit supply voltage	V_{DD}	14.55	15.0	15.45	V	
Reset drain voltage	V_{RD}	14.55	15.0	15.45	V	$V_{RD} = V_{DD}$
Output circuit gate voltage	V_{GG}	1.75	2.0	2.25	V	
Output circuit source	V_{SS}	Grounded with 390Ω resistor				
Protective transistor bias	V_L	*1				
Substrate bias circuit supply voltage	V_{DSUB}	14.55	15.0	15.45	V	
Substrate clock	ϕ_{SUB}	*2				

*1 V_L setting is the V_{VL} voltage of the vertical transfer clock waveform, or the same power supply as the V_L power supply for the V driver should be used. (When CXD1267AN is used.)

*2 Do not apply a DC bias to the substrate clock pin, because a DC bias is generated within the CCD.

Bias Conditions 2 [when used in substrate bias external adjustment mode]

Item	Symbol	Min.	Typ.	Max.	Unit	Remarks
Output circuit supply voltage	V_{DD}	14.55	15.0	15.45	V	
Reset drain voltage	V_{RD}	14.55	15.0	15.45	V	$V_{RD} = V_{DD}$
Output circuit gate voltage	V_{GG}	1.75	2.0	2.25	V	
Output circuit source	V_{SS}	Grounded with 390Ω resistor				
Protective transistor bias	V_L	*3				
Substrate bias circuit supply voltage	V_{DSUB}	*4				
Substrate voltage adjustment range	V_{SUB}	6.0		14.0	V	*5
Substrate voltage adjustment precision	ΔV_{SUB}	–3		+3	%	*5

*3 V_L setting is the V_{VL} voltage of the vertical transfer clock waveform, or the same power supply as the V_L power supply for the V driver should be used. (When CXD1267AN is used.)

*4 Connect to GND or leave open.

*5 The setting value of the substrate voltage (V_{SUB}) is indicated on the back of the image sensor by a special code. When adjusting the substrate voltage externally, adjust the substrate voltage to the indicated voltage. The adjustment precision is ±3%. However, this setting value has not significance when used in substrate bias internal generation mode.

V_{SUB} code — one character indication

Code and optimal setting correspond to each other as follows.

V_{SUB} code	E	f	G	h	J	K	L	m	N	P	Q	R	S	T	U	V	W
Optimal setting	6.0	6.5	7.0	7.5	8.0	8.5	9.0	9.5	10.0	10.5	11.0	11.5	12.0	12.5	13.0	13.5	14.0

<Example> "L" → V_{SUB} = 9.0V

DC Characteristics

Item	Symbol	Min.	Typ.	Max.	Unit	Remarks
Output circuit supply current	I_{DD}		5.0	10.0	mA	

Clock Voltage Conditions

Item	Symbol	Min.	Typ.	Max.	Unit	Waveform diagram	Remarks
Readout clock voltage	V_{VT}	14.55	15.0	15.45	V	1	
Vertical transfer clock voltage	V_{VH1}, V_{VH2}	–0.05	0	0.05	V	2	$V_{VH} = (V_{VH1} + V_{VH2})/2$
	V_{VH3}, V_{VH4}	–0.2	0	0.05	V	2	
	V_{VL1}, V_{VL2}, V_{VL3}, V_{VL4}	–9.6	–9.0	–8.5	V	2	$V_{VL} = (V_{VL3} + V_{VL4})/2$
	$V_{\phi V}$	8.3	9.0	9.65	Vp-p	2	$V_{\phi V} = V_{VHn} - V_{VLn}$ (n = 1 to 4)
	$\lvert V_{VH1} - V_{VH2} \rvert$			0.1	V	2	
	$V_{VH3} - V_{VH}$	–0.25		0.1	V	2	
	$V_{VH4} - V_{VH}$	–0.25		0.1	V	2	
	V_{VHH}			0.5	V	2	High-level coupling
	V_{VHL}			0.5	V	2	High-level coupling
	V_{VLH}			0.5	V	2	Low-level coupling
	V_{VLL}			0.5	V	2	Low-level coupling
Horizontal transfer clock voltage	$V_{\phi H}$	4.75	5.0	5.25	Vp-p	3	
	V_{HL}	–0.05	0	0.05	V	3	
Reset gate clock voltage*1	V_{RGL}		*1		V	4	
	$V_{\phi RG}$	4.5	5.0	5.5	Vp-p	4	
	$V_{RGLH} - V_{RGLL}$			0.8	V	4	Low-level coupling
Substrate clock voltage	$V_{\phi SUB}$	23.0	24.0	25.0	Vp-p	5	

*1 Input the reset gate clock without applying a DC bias. In addition, the reset gate clock can also be driven with the following specifications.

Item	Symbol	Min.	Typ.	Max.	Unit	Waveform diagram	Remarks
Reset gate clock voltage	V_{RGL}	–0.2	0	0.2	V	4	
	$V_{\phi RG}$	8.5	9.0	9.5	Vp-p	4	

Clock Equivalent Circuit Constant

Item	Symbol	Min.	Typ.	Max.	Unit	Remarks
Capacitance between vertical transfer clock and GND	$C_{\phi V1}$, $C_{\phi V3}$		1800		pF	
	$C_{\phi V2}$, $C_{\phi V4}$		2200		pF	
Capacitance between vertical transfer clocks	$C_{\phi V12}$, $C_{\phi V34}$		450		pF	
	$C_{\phi V23}$, $C_{\phi V41}$		270		pF	
Capacitance between horizontal transfer clock and GND	$C_{\phi H1}$		64		pF	
	$C_{\phi H2}$		62		pF	
Capacitance between horizontal transfer clocks	$C_{\phi HH}$		47		pF	
Capacitance between reset gate clock and GND	$C_{\phi RG}$		8		pF	
Capacitance between substrate clock and GND	$C_{\phi SUB}$		400		pF	
Vertical transfer clock series resistor	R_1, R_2, R_3, R_4		68		Ω	
Vertical transfer clock ground resistor	R_{GND}		15		Ω	

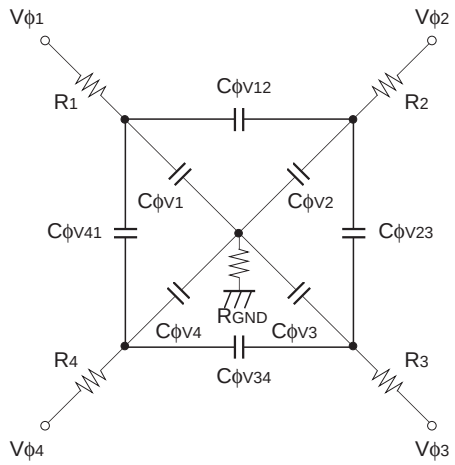

Vertical transfer clock equivalent circuit

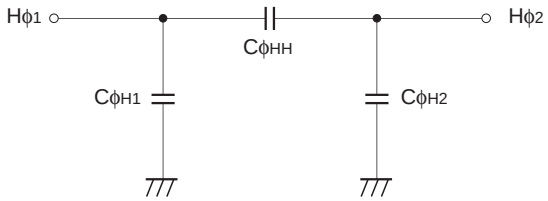

Horizontal transfer clock equivalent circuit

Drive Clock Waveform Conditions

(1) Readout clock waveform

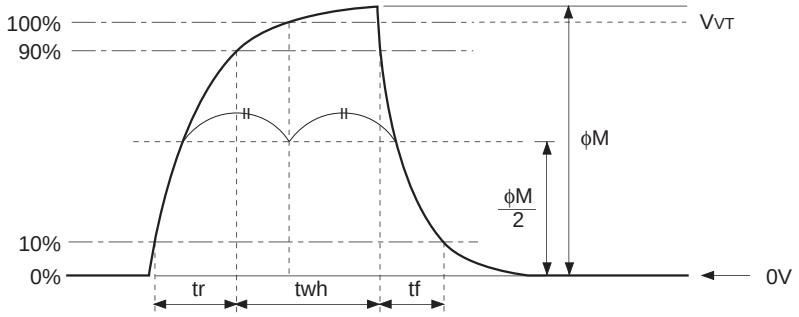

(2) Vertical transfer clock waveform

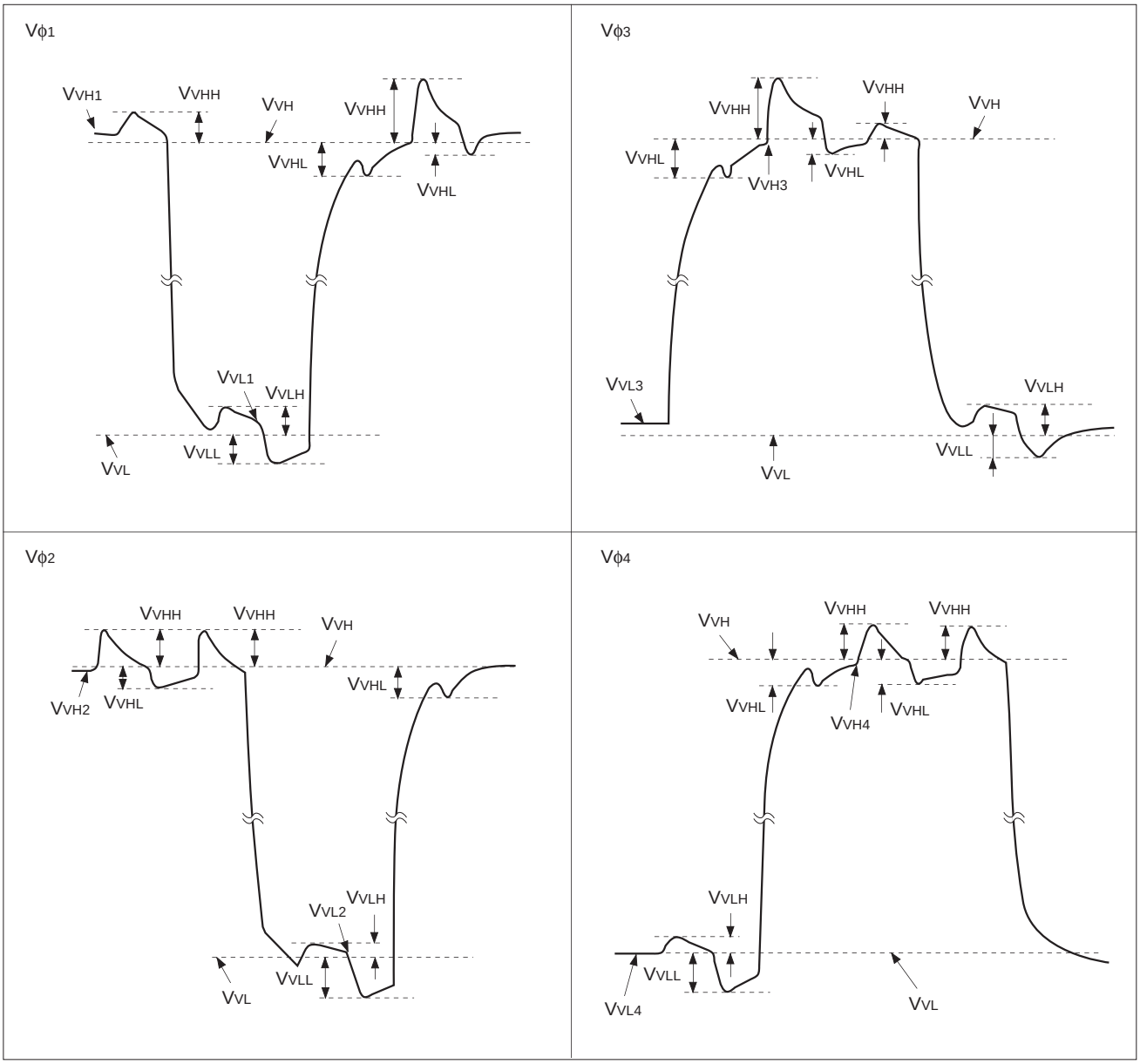

$V_{VH} = (V_{VH1} + V_{VH2})/2$

$V_{VL} = (V_{VL3} + V_{VL4})/2$

$V_{\phi V} = V_{VHn} - V_{VLn}$ (n = 1 to 4)

(3) Horizontal transfer clock waveform

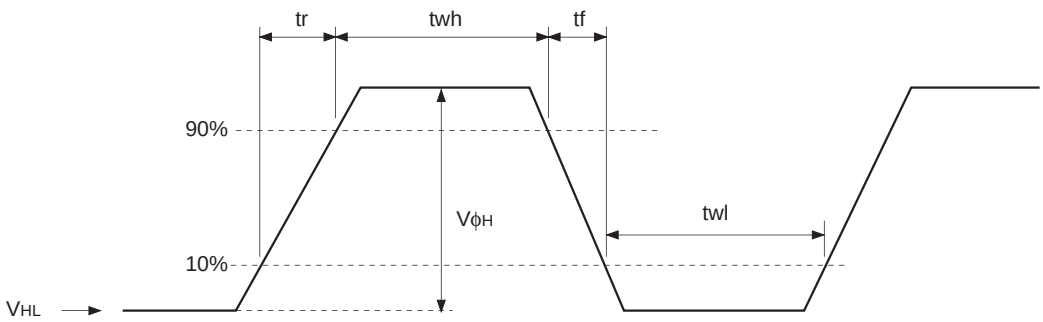

(4) Reset gate clock waveform

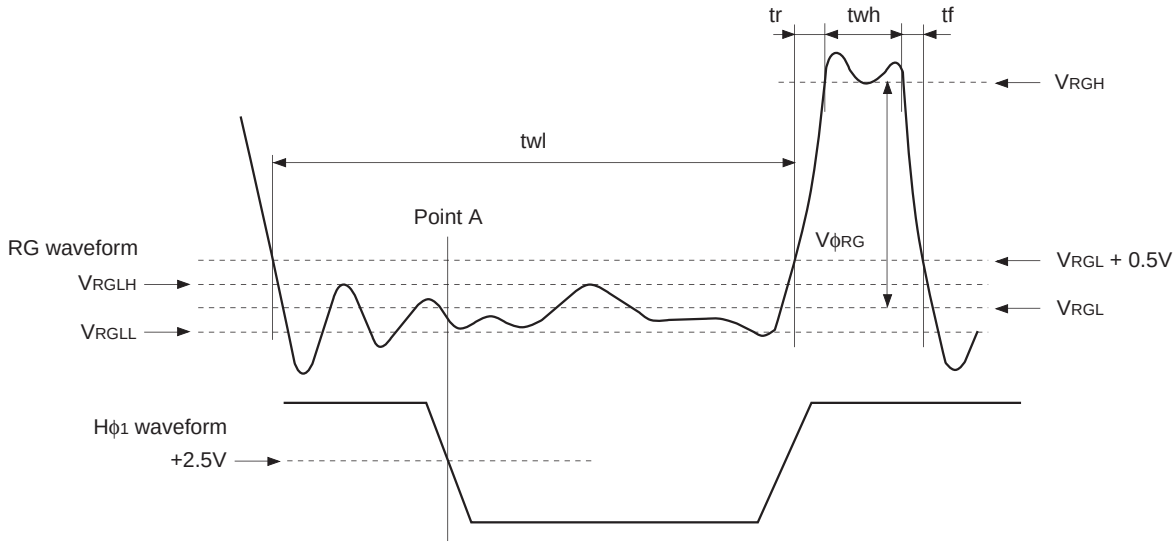

V_{RGLH} is the maximum value and V_{RGLL} is the minimum value of the coupling waveform during the period from Point A in the above diagram until the rising edge of RG. In addition, V_{RGL} is the average value of V_{RGLH} and V_{RGLL}.

$$V_{RGL} = (V_{RGLH} + V_{RGLL})/2$$

Assuming V_{RGH} is the minimum value during the interval twh, then:

$$V_{\phi RG} = V_{RGH} - V_{RGL}$$

(5) Substrate clock waveform

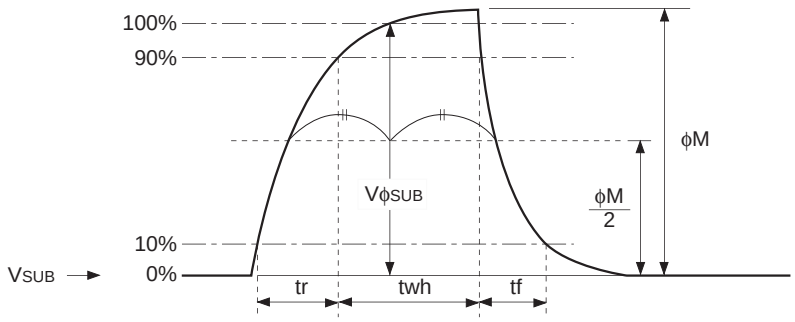

Clock Switching Characteristics

Item		Symbol	twh			twl			tr			tf			Unit	Remarks
			Min.	Typ.	Max.	Min.	Typ.	Max.	Min.	Typ.	Max.	Min.	Typ.	Max.		
Readout clock		V_T	2.3	2.5					0.5			0.5			µs	During readout
Vertical transfer clock		$V\phi_1$, $V\phi_2$, $V\phi_3$, $V\phi_4$										15		250	ns	*1
Horizontal transfer clock	During imaging	$H\phi$		20			20			15	19		15	19	ns	*2
	During parallel-serial conversion	$H\phi_1$		5.38						0.01			0.01		µs	
		$H\phi_2$					5.38			0.01			0.01			
Reset gate clock		ϕ_{RG}	11	13			51			3			3		ns	
Substrate clock		ϕ_{SUB}	1.5	1.8							0.5			0.5	µs	During drain charge

*1 When vertical transfer clock driver CXD1267AN is used.

*2 tf ≥ tr – 2ns.

Item	Symbol	two			Unit	Remarks
		Min.	Typ.	Max.		
Horizontal transfer clock	$H\phi_1$, $H\phi_2$	16	20		ns	*3

*3 The overlap period for twh and twl of horizontal transfer clocks $H\phi_1$ and $H\phi_2$ is two.

Image Sensor Characteristics (Ta = 25°C)

Item	Symbol	Min.	Typ.	Max.	Unit	Measurement method	Remarks
Sensitivity	S	4500	5500		mV	1	*1
Saturation signal	Vsat	900			mV	2	Ta = 60°C
Smear	Sm		0.00005	0.00018	%	3	
Video signal shading	SH			20	%	4	Zone 0 and I
				25	%	4	Zone 0 to II'
Dark signal	Vdt			2	mV	5	Ta = 60°C
Dark signal shading	ΔVdt			1	mV	6	Ta = 60°C
Flicker	F			2	%	7	
Lag	Lag			0.5	%	8	

*1 Sensitivity data is the conversion value by Measurement method 1.

Zone Definition of Video Signal Shading

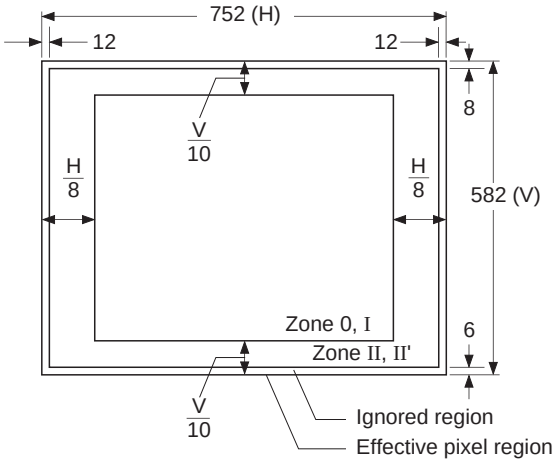

Image Sensor Characteristics Measurement Method

◎ Measurement conditions

1) In the following measurements, the device drive conditions are at the typical values of the bias and clock voltage conditions. (When used with substrate bias external adjustment, set the substrate voltage to the value indicated on the device and connect V_{DSUB} pin to GND or leare it open.)

2) In the following measurements, spot blemishes are excluded and, unless otherwise specified, the optical black (OB) level is used as the reference for the signal output, and the value measured at point [*A] in the drive circuit example is used.

◎ Definition of standard imaging conditions

1) Standard imaging condition I:
   Use a pattern box (luminance: 706cd/m^2, color temperature of 3200K halogen source) as a subject. (Pattern for evaluation is not applicable.) Use a testing standard lens and image at F8. The luminous intensity to the sensor receiving surface at this point is defined as the standard sensitivity testing luminous intensity. (IR cut filter is not applicable.)

2) Standard imaging condition II:
   Image a light source (color temperature of 3200K) with a uniformity of brightness within 2% at all angles. Use a testing standard lens and the luminous intensity is adjusted to the value indicated in each testing item by the lens diaphragm. (IR cut filter is not applicable.)

1. Sensitivity
   Set to standard imaging condition I. After selecting the electronic shutter mode with a shutter speed of 1/500s, measure the signal output (Vs) at the center of the screen and substitute the value into the following formula.

   $$S = Vs \times \frac{500}{50} \text{ [mV]}$$

2. Saturation signal
   Set to standard imaging condition II. After adjusting the luminous intensity to 10 times the intensity with the average value of the signal output, 200mV, measure the minimum value of the signal output.

3. Smear
   Set to standard imaging condition II. Adjust the luminous intensity to 500 times the intensity with the average value of the signal output, 200mV. When the readout clock is stopped and the charge drain is executed by the electronic shutter at the respective H blankings, measure the maximum value (VSm [mV]) of the signal output and substitute the value into the following formula.

   $$Sm = \frac{VSm}{200} \times \frac{1}{500} \times \frac{1}{10} \times 100 \text{ [\%] (1/10V method conversion value)}$$

4. Video signal shading
   Set to standard imaging condition II. Adjust the luminous intensity so that the average value of the signal output is 200mV. Then measure the maximum (Vmax [mV]) and minimum (Vmin [mV]) values of the signal output and substitute the values into the following formula.

   $$SH = (Vmax - Vmin)/200 \times 100 \text{ [\%]}$$

5. Dark signal
   Measure the average value of the signal output (Vdt [mV]) with the device ambient temperature 60°C and the device in the light-obstructed state, using the horizontal idle transfer level as a reference.

6. Dark signal shading
   After measuring 5, measure the maximum (Vdmax [mV]) and minimum (Vdmin [mV]) values of the dark signal output and substitute the values into the following formula.

   $\Delta Vdt = Vdmax - Vdmin$ [mV]

7. Flicker
   Set to standard imaging condition II. Adjust the luminous intensity so that the average value of the signal output is 200mV, and then measure the difference in the signal level between fields (ΔVf [mV]). Then substitute the value into the following formula.

   $F = (\Delta Vf/200) \times 100$ [%]

8. Lag
   Adjust the signal output value generated by strobe light to 200mV. After setting the strobe light so that it strobes with the following timing, measure the residual signal (Vlag). Substitute the value into the following formula.

   $Lag = (Vlag/200) \times 100$ [%]

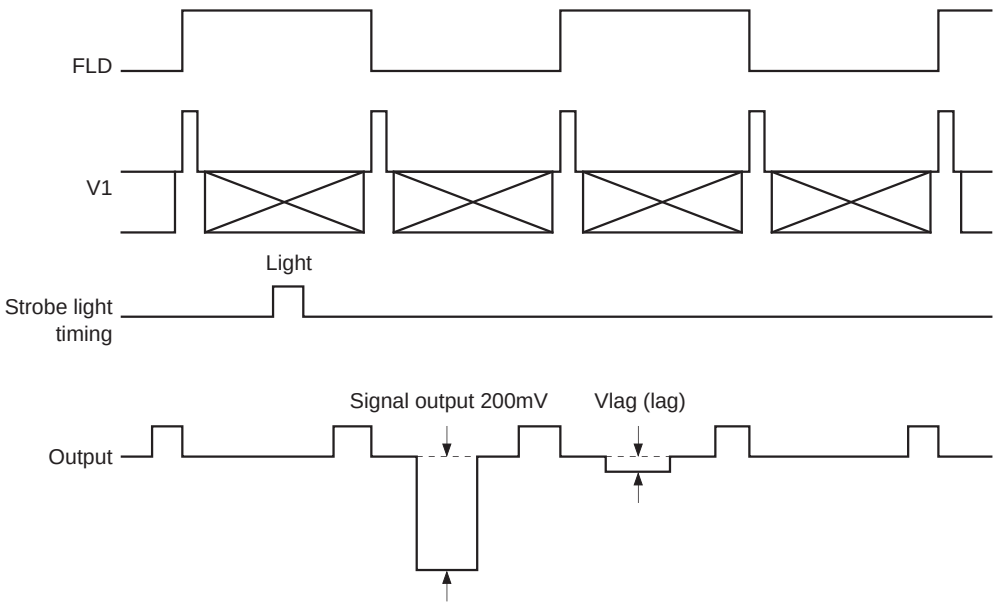

Drive Circuit 1 (substrate bias internal generation mode)

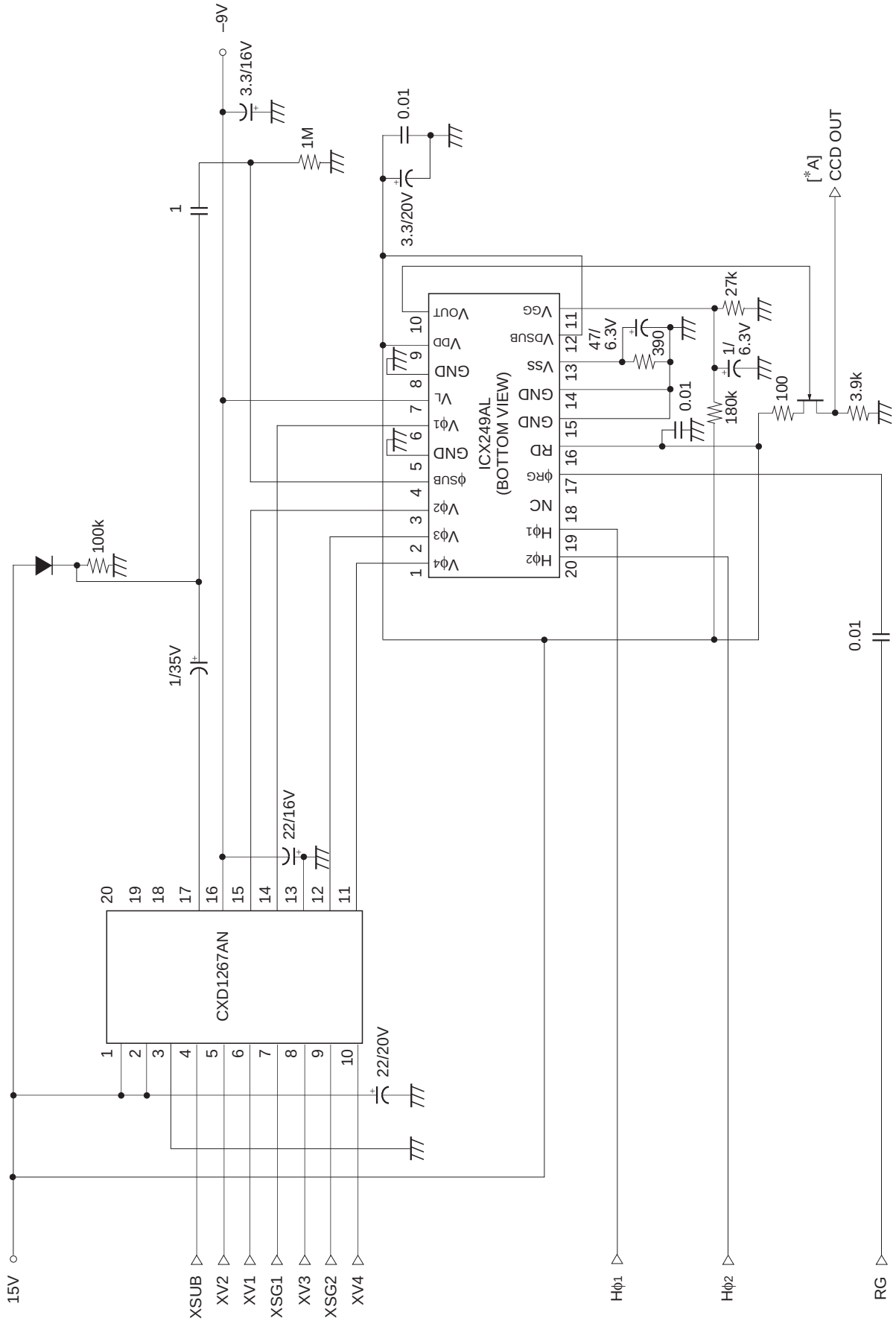

Drive Circuit 2 (substrate bias external adjustment mode)

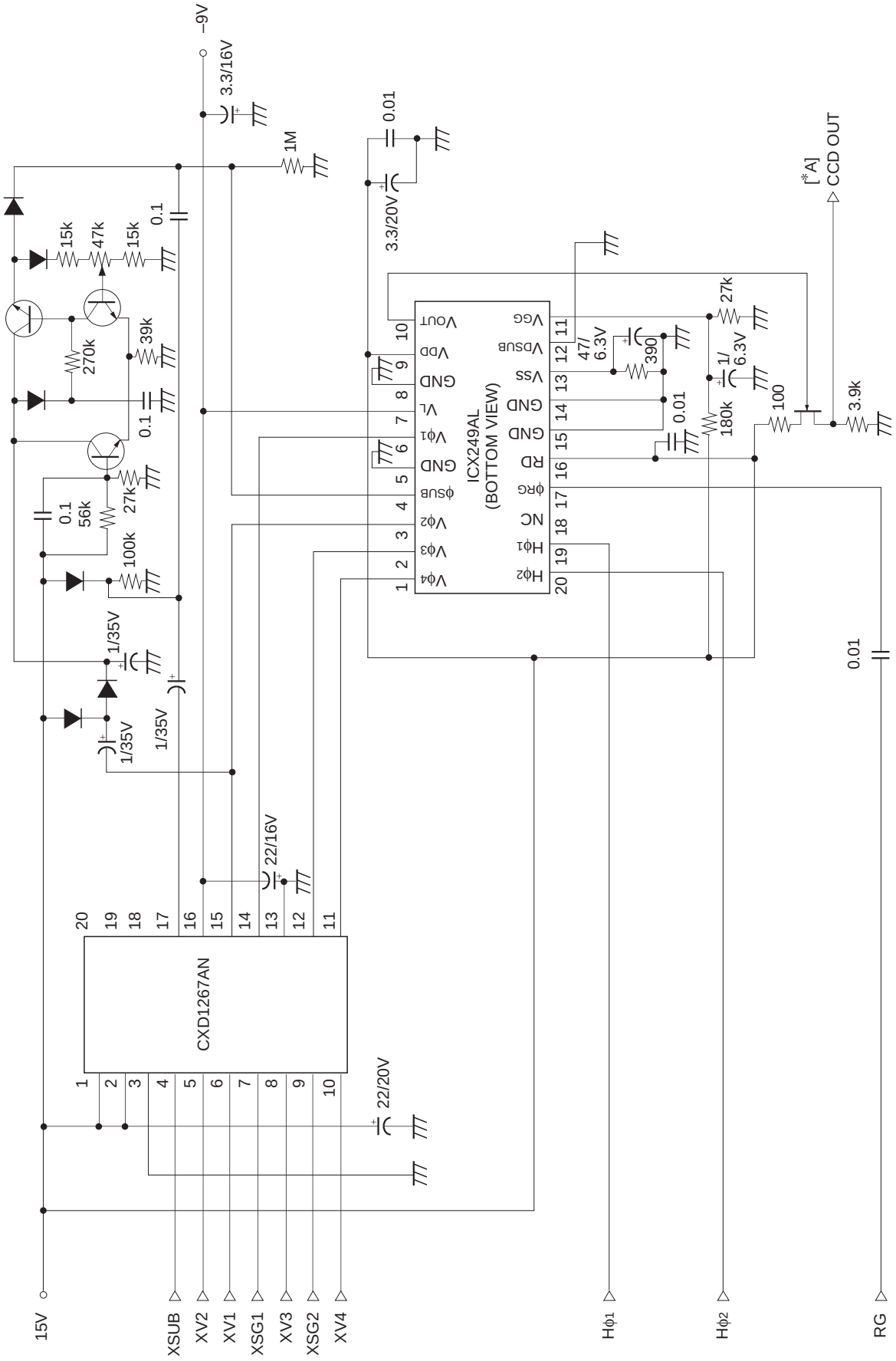

Spectral Sensitivity Characteristics
(Includes lens characteristics, excludes light source characteristics)

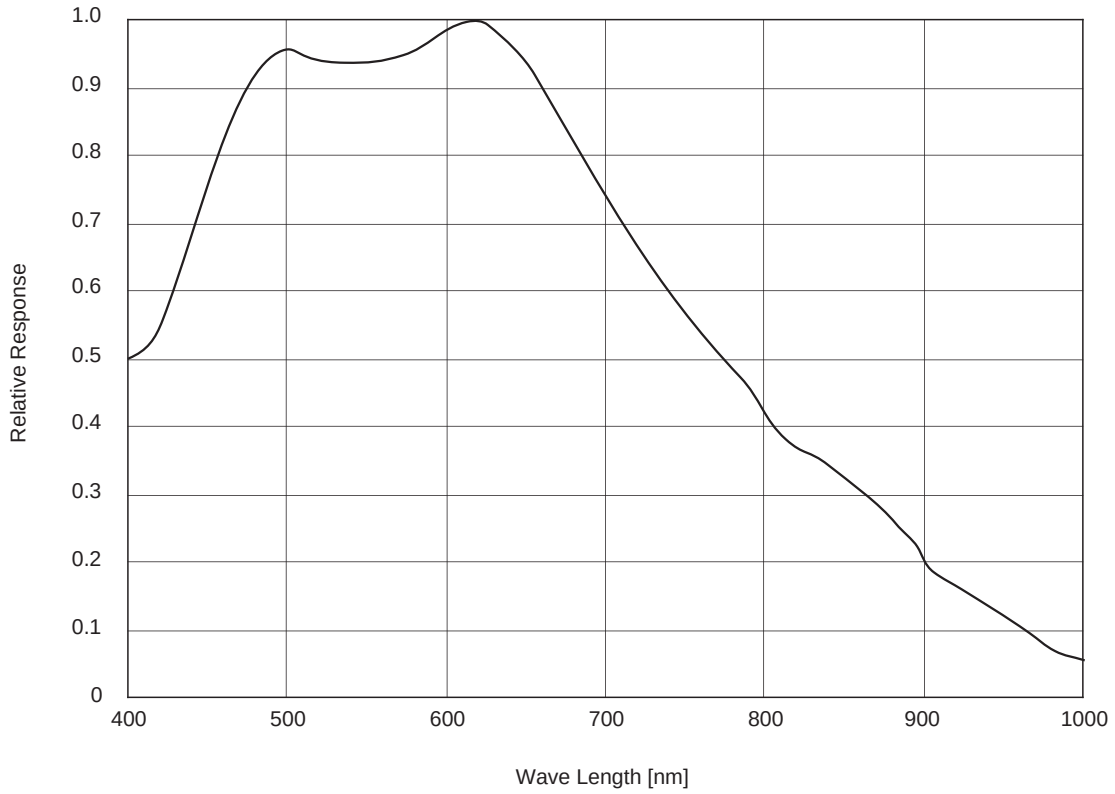

Sensor Readout Clock Timing Chart

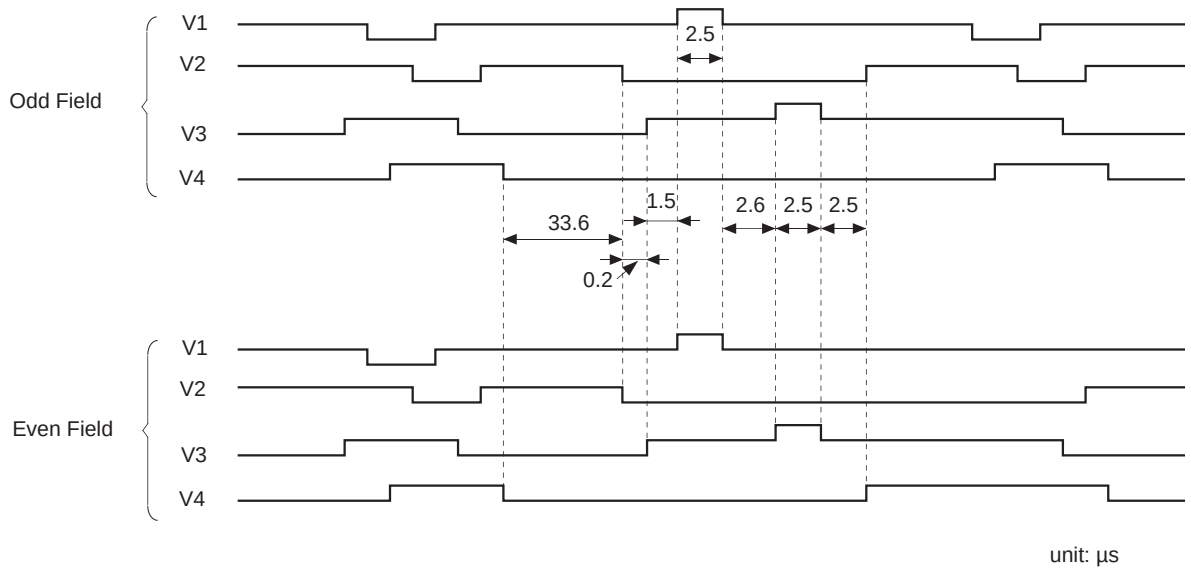

Drive Timing Chart (Vertical Sync)

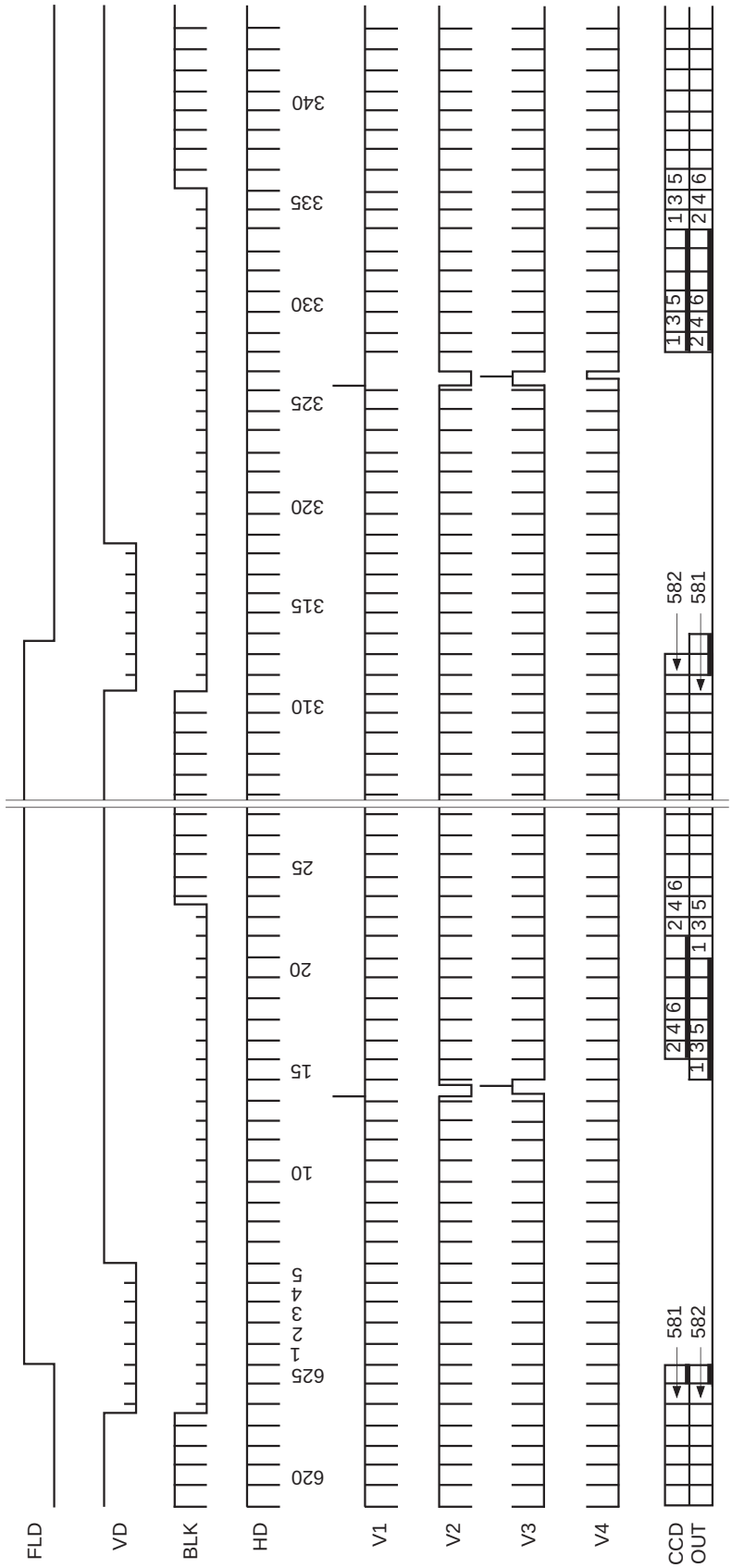

Drive Timing Chart (Horizontal Sync)

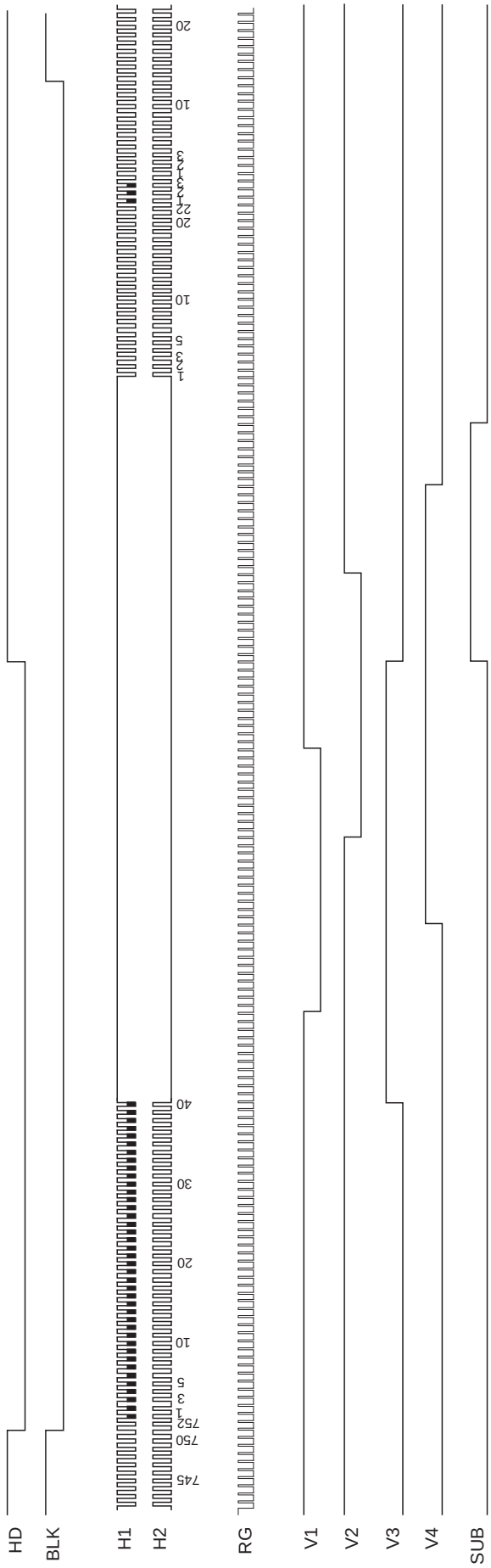

Notes on Handling

1) Static charge prevention

CCD image sensors are easily damaged by static discharge. Before handling be sure to take the following protective measures.

a) Either handle bare handed or use non-chargeable gloves, clothes or material.
Also use conductive shoes.

b) When handling directly use an earth band.

c) Install a conductive mat on the floor or working table to prevent the generation of static electricity.

d) Ionized air is recommended for discharge when handling CCD image sensor.

e) For the shipment of mounted substrates, use boxes treated for the prevention of static charges.

2) Soldering

a) Make sure the package temperature does not exceed 80°C.

b) Solder dipping in a mounting furnace causes damage to the glass and other defects. Use a ground 30W soldering iron and solder each pin in less than 2 seconds. For repairs and remount, cool sufficiently.

c) To dismount an image sensor, do not use a solder suction equipment. When using an electric desoldering tool, use a thermal controller of the zero cross On/Off type and connect it to ground.

3) Dust and dirt protection

Image sensors are packed and delivered by taking care of protecting its glass plates from harmful dust and dirt. Clean glass plates with the following operation as required, and use them.

a) Perform all assembly operations in a clean room (class 1000 or less).

b) Do not either touch glass plates by hand or have any object come in contact with glass surfaces. Should dirt stick to a glass surface, blow it off with an air blower. (For dirt stuck through static electricity ionized air is recommended.)

c) Clean with a cotton bud and ethyl alcohol if the grease stained. Be careful not to scratch the glass.

d) Keep in a case to protect from dust and dirt. To prevent dew condensation, preheat or precool when moving to a room with great temperature differences.

e) When a protective tape is applied before shipping, just before use remove the tape applied for electrostatic protection. Do not reuse the tape.

4) Installing (attaching)

a) Remain within the following limits when applying a static load to the package. Do not apply any load more than 0.7mm inside the outer perimeter of the glass portion, and do not apply any load or impact to limited portions. (This may cause cracks in the package.)

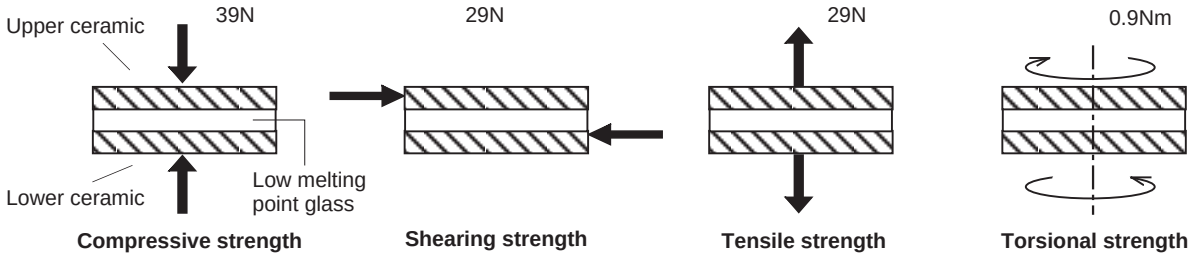

b) If a load is applied to the entire surface by a hard component, bending stress may be generated and the package may fracture, etc., depending on the flatness of the ceramic portions. Therefore, for installation, use either an elastic load, such as a spring plate, or an adhesive.

c) The adhesive may cause the marking on the rear surface to disappear, especially in case the regulated voltage value is indicated on the rear surface. Therefore, the adhesive should not be applied to this area, and indicated values should be transferred to other locations as a precaution.

d) The upper and lower ceramic are joined by low melting point glass. Therefore, care should be taken not to perform the following actions as this may cause cracks.
- Applying repeated bending stress to the outer leads.
- Heating the outer leads for an extended period with a soldering iron.
- Rapidly cooling or heating the package.
- Applying any load or impact to a limited portion of the low melting point glass using tweezers or other sharp tools.
- Prying at the upper or lower ceramic using the low melting point glass as a fulcrum.

Note that the same cautions also apply when removing soldered products from boards.

e) Acrylate anaerobic adhesives are generally used to attach CCD image sensors. In addition, cyano-acrylate instantaneous adhesives are sometimes used jointly with acrylate anaerobic adhesives. (reference)

5) Others

a) Do not expose to strong light (sun rays) for long periods. For continuous using under cruel condition exceeding the normal using condition, consult our company.

b) Exposure to high temperature or humidity will affect the characteristics. Accordingly avoid storage or usage in such conditions.

c) This CCD image sensor has sensitivity in the near infrared area. Its focus may not match in the same condition under visible light /near infrared light because of aberration.

Package Outline Unit: mm

20pin DIP (600mil)

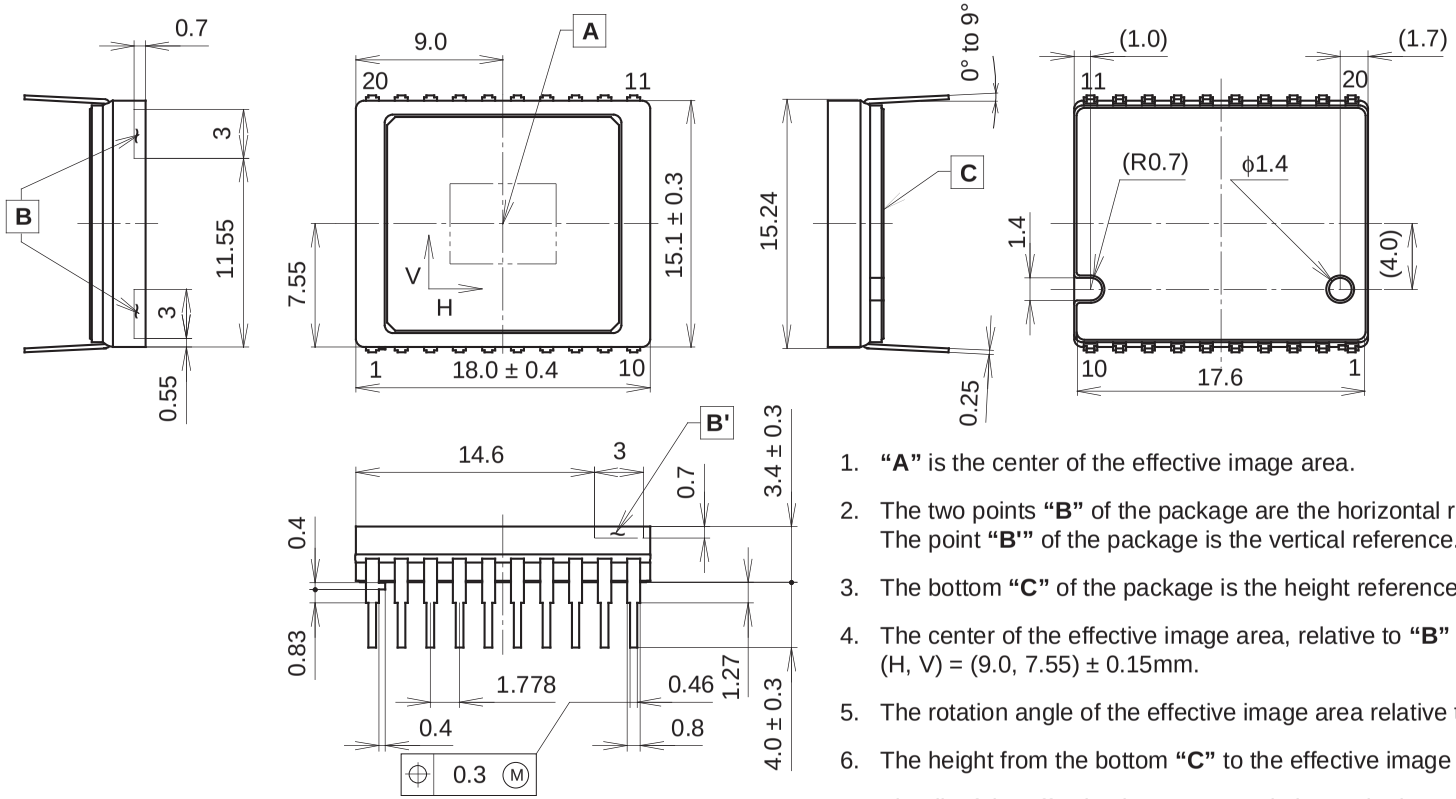

1. **"A"** is the center of the effective image area.
2. The two points **"B"** of the package are the horizontal reference. The point **"B'"** of the package is the vertical reference.
3. The bottom **"C"** of the package is the height reference.
4. The center of the effective image area, relative to **"B"** and **"B'"** is (H, V) = (9.0, 7.55) ± 0.15mm.
5. The rotation angle of the effective image area relative to H and V is ± 1°.
6. The height from the bottom **"C"** to the effective image area is 1.41 ± 0.15mm.
7. The tilt of the effective image area relative to the bottom **"C"** is less than 60µm.
8. The thickness of the cover glass is 0.75mm, and the refractive index is 1.5.
9. The notch and the hole on the bottom must not be used for reference of fixing.

PACKAGE STRUCTURE

PACKAGE MATERIAL	Cer-DIP
LEAD TREATMENT	TIN PLATING
LEAD MATERIAL	42 ALLOY
PACKAGE WEIGHT	2.6g