TOSHIBA CMOS Digital Integrated Circuit Silicon Monolithic

TC74AC393P,TC74AC393F,TC74AC393FN,TC74AC393FT

Dual Binary Counter

The TC74AC393 is an advanced high speed CMOS 4-BIT BINARY COUNTER fabricated with silicon gate and double-layer metal wiring C^2MOS technology.

It achieves the high speed operation similar to equivalent Bipolar Schottky TTL while maintaining the CMOS low power dissipation.

It contains two independent counter circuits in one package, so that counting or frequency division of eight binary bits can be achieved with one IC.

This device changes state on the negative going transition of the $\overline{\text{CLOCK}}$ pulse. The counter can be reset to "0" (QA to QD = "L") by a high at the CLEAR input regardless of other inputs.

All inputs are equipped with protection circuits against static discharge or transient excess voltage.

Features

- High speed: f_{max} = 180 MHz (typ.) at V_{CC} = 5 V
- Low power dissipation: I_{CC} = 8 μA (max) at Ta = 25°C
- High noise immunity: $V_{NIH} = V_{NIL}$ = 28% V_{CC} (min)
- Symmetrical output impedance: $|I_{OH}| = I_{OL}$ = 24 mA (min)
  Capability of driving 50 Ω transmission lines.
- Balanced propagation delays: $t_{pLH} \simeq t_{pHL}$
- Wide operating voltage range: $V_{CC\,(opr)}$ = 2 to 5.5 V
- Pin and function compatible with 74F393

Note: xxxFN (JEDEC SOP) is not available in Japan.

TC74AC393P

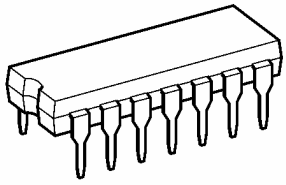

DIP14-P-300-2.54

TC74AC393F

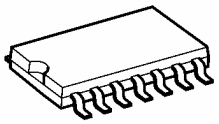

SOP14-P-300-1.27A

TC74AC393FN

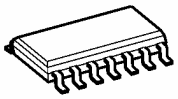

SOL14-P-150-1.27

TC74AC393FT

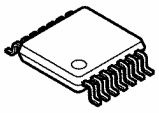

TSSOP14-P-0044-0.65A

Weight

DIP14-P-300-2.54	: 0.96 g (typ.)
SOP14-P-300-1.27A	: 0.18 g (typ.)
SOL14-P-150-1.27	: 0.12 g (typ.)
TSSOP14-P-0044-0.65A	: 0.06 g (typ.)

Pin Assignment

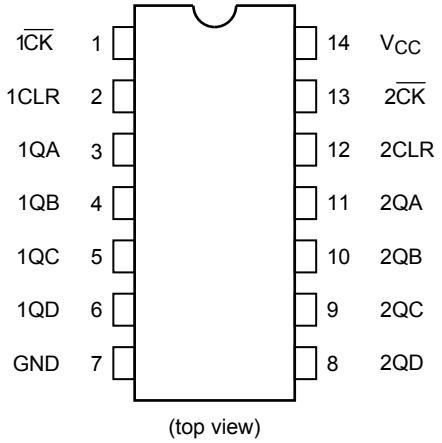

IEC Logic Symbol

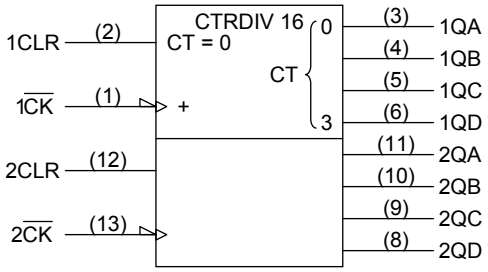

Truth Table

Inputs		Outputs			
$\overline{CK}$	CLR	QA	QB	QC	QD
X	H	L	L	L	L
↓	L	Count Up			
↑	L	No Change			

X: Don't care

Timing Chart

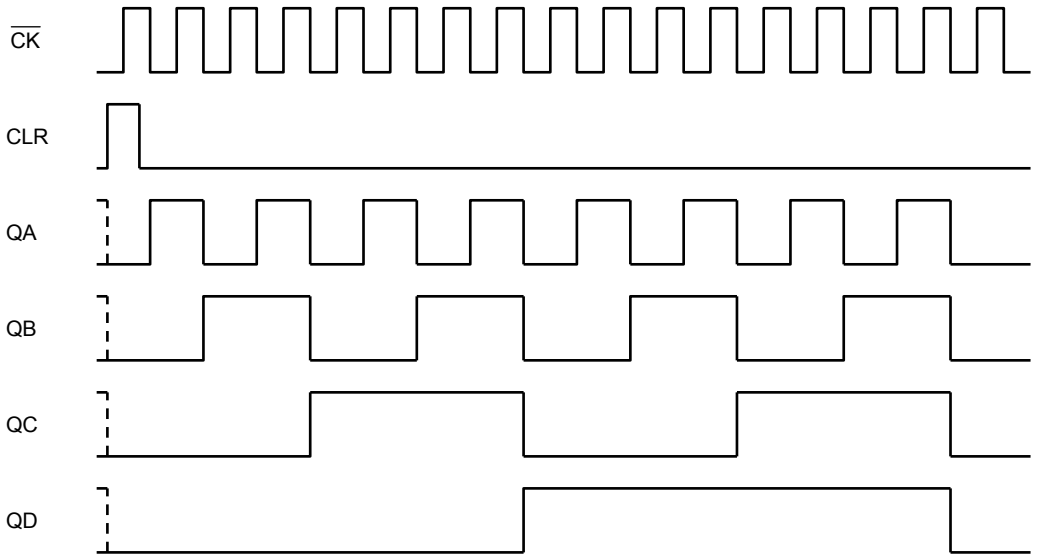

System Diagram

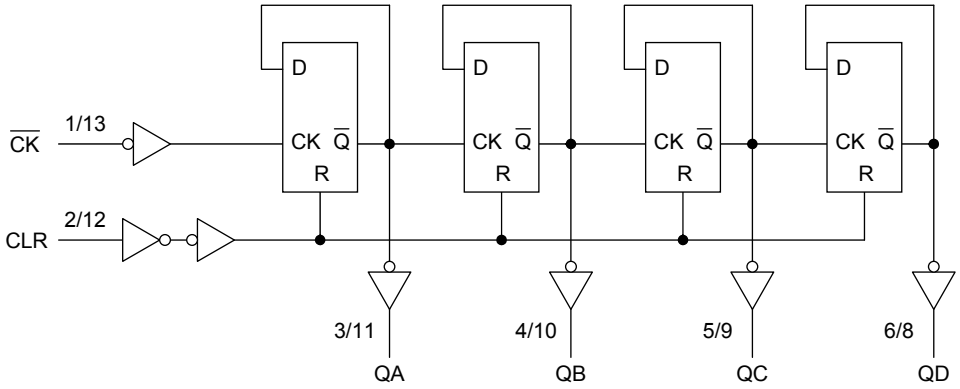

Absolute Maximum Ratings (Note 1)

Characteristics	Symbol	Rating	Unit
Supply voltage range	V_{CC}	−0.5 to 7.0	V
DC input voltage	V_{IN}	−0.5 to V_{CC} + 0.5	V
DC output voltage	V_{OUT}	−0.5 to V_{CC} + 0.5	V
Input diode current	I_{IK}	±20	mA
Output diode current	I_{OK}	±50	mA
DC output current	I_{OUT}	±50	mA
DC V_{CC}/ground current	I_{CC}	±200	mA
Power dissipation	P_D	500 (DIP) (Note 2)/180 (SOP/TSSOP)	mW
Storage temperature	T_{stg}	−65 to 150	°C

Note 1: Exceeding any of the absolute maximum ratings, even briefly, lead to deterioration in IC performance or even destruction.
Using continuously under heavy loads (e.g. the application of high temperature/current/voltage and the significant change in temperature, etc.) may cause this product to decrease in the reliability significantly even if the operating conditions (i.e. operating temperature/current/voltage, etc.) are within the absolute maximum ratings and the operating ranges.
Please design the appropriate reliability upon reviewing the Toshiba Semiconductor Reliability Handbook ("Handling Precautions"/Derating Concept and Methods) and individual reliability data (i.e. reliability test report and estimated failure rate, etc).

Note 2: 500 mW in the range of Ta = −40 to 65°C. From Ta = 65 to 85°C a derating factor of −10 mW/°C should be applied up to 300 mW.

Operating Ranges (Note)

Characteristics	Symbol	Rating	Unit
Supply voltage	V_{CC}	2.0 to 5.5	V
Input voltage	V_{IN}	0 to V_{CC}	V
Output voltage	V_{OUT}	0 to V_{CC}	V
Operating temperature	T_{opr}	−40 to 85	°C
Input rise and fall time	dt/dV	0 to 100 (V_{CC} = 3.3 ± 0.3 V) 0 to 20 (V_{CC} = 5 ± 0.5 V)	ns/V

Note: The operating ranges must be maintained to ensure the normal operation of the device.
Unused inputs must be tied to either VCC or GND.

Electrical Characteristics

DC Characteristics

Characteristics	Symbol	Test Condition		V_{CC} (V)	Ta = 25°C Min	Ta = 25°C Typ.	Ta = 25°C Max	Ta = −40 to 85°C Min	Ta = −40 to 85°C Max	Unit
High-level input voltage	V_{IH}	—		2.0	1.50	—	—	1.50	—	V
				3.0	2.10	—	—	2.10	—	
				5.5	3.85	—	—	3.85	—	
Low-level input voltage	V_{IL}	—		2.0	—	—	0.50	—	0.50	V
				3.0	—	—	0.90	—	0.90	
				5.5	—	—	1.65	—	1.65	
High-level output voltage	V_{OH}	V_{IN} = V_{IH} or V_{IL}	I_{OH} = −50 μA	2.0	1.9	2.0	—	1.9	—	V
				3.0	2.9	3.0	—	2.9	—	
				4.5	4.4	4.5	—	4.4	—	
			I_{OH} = −4 mA	3.0	2.58	—	—	2.48	—	
			I_{OH} = −24 mA	4.5	3.94	—	—	3.80	—	
			I_{OH} = −75 mA (Note)	5.5	—	—	—	3.85	—	
Low-level output voltage	V_{OL}	V_{IN} = V_{IH} or V_{IL}	I_{OL} = 50 μA	2.0	—	0.0	0.1	—	0.1	V
				3.0	—	0.0	0.1	—	0.1	
				4.5	—	0.0	0.1	—	0.1	
			I_{OL} = 12 mA	3.0	—	—	0.36	—	0.44	
			I_{OL} = 24 mA	4.5	—	—	0.36	—	0.44	
			I_{OL} = 75 mA (Note)	5.5	—	—	—	—	1.65	
Input leakage current	I_{IN}	V_{IN} = V_{CC} or GND		5.5	—	—	±0.1	—	±1.0	μA
Quiescent supply current	I_{CC}	V_{IN} = V_{CC} or GND		5.5	—	—	8.0	—	80.0	μA

Note: This spec indicates the capability of driving 50 Ω transmission lines.

One output should be tested at a time for a 10 ms maximum duration.

Timing Requirements (input: t_r = t_f = 3 ns)

Characteristics	Symbol	Test Condition	V_{CC} (V)	Ta = 25°C Limit	Ta = −40 to 85°C Limit	Unit
Minimum pulse width ($\overline{CK}$)	$t_{w(H)}$	—	3.3 ± 0.3	7.0	7.0	ns
	$t_{w(L)}$		5.0 ± 0.5	5.0	5.0	
Minimum pulse width (CLR)	$t_{w(H)}$	—	3.3 ± 0.3	7.0	7.0	ns
			5.0 ± 0.5	5.0	5.0	
Minimum removal time	t_{rem}	—	3.3 ± 0.3	6.0	6.0	ns
			5.0 ± 0.5	3.0	3.0	

AC Characteristics (C_L = 50 pF, R_L = 500 Ω, input: t_r = t_f = 3 ns)

Characteristics	Symbol	Test Condition		Ta = 25°C			Ta = −40 to 85°C		Unit
			V_{CC} (V)	Min	Typ.	Max	Min	Max	
Propagation delay time ($\overline{CK}$ - QA)	t_{pLH} t_{pHL}	—	3.3 ± 0.3 5.0 ± 0.5	— —	8.0 5.0	13.2 8.3	1.0 1.0	15.0 9.5	ns
Propagation delay time ($\overline{CK}$ - QB)	t_{pLH} t_{pHL}	—	3.3 ± 0.3 5.0 ± 0.5	— —	10.1 5.9	16.7 10.5	1.0 1.0	19.0 12.0	ns
Propagation delay time ($\overline{CK}$ - QC)	t_{pLH} t_{pHL}	—	3.3 ± 0.3 5.0 ± 0.5	— —	12.0 6.8	20.2 12.3	1.0 1.0	23.0 14.0	ns
Propagation delay time ($\overline{CK}$ - QD)	t_{pLH} t_{pHL}	—	3.3 ± 0.3 5.0 ± 0.5	— —	13.0 7.5	23.0 13.2	1.0 1.0	26.0 15.0	ns
Propagation delay time (CLR-Q_n)	t_{pHL}	—	3.3 ± 0.3 5.0 ± 0.5	— —	8.0 5.1	13.2 8.8	1.0 1.0	15.0 10.0	ns
Maximum clock frequency	f_{max}	—	3.3 ± 0.3 5.0 ± 0.5	65 100	125 160	— —	65 100	— —	MHz
Input capacitance	C_{IN}	—		—	5	10	—	10	pF
Power dissipation capacitance	C_{PD}		(Note)	—	36	—	—	—	pF

Note: C_{PD} is defined as the value of the internal equivalent capacitance which is calculated from the operating current consumption without load.

Average operating current can be obtained by the equation:

$$I_{CC\ (opr)} = C_{PD} \cdot V_{CC} \cdot f_{IN} + I_{CC}/2 \text{ (per counter)}$$

Package Dimensions

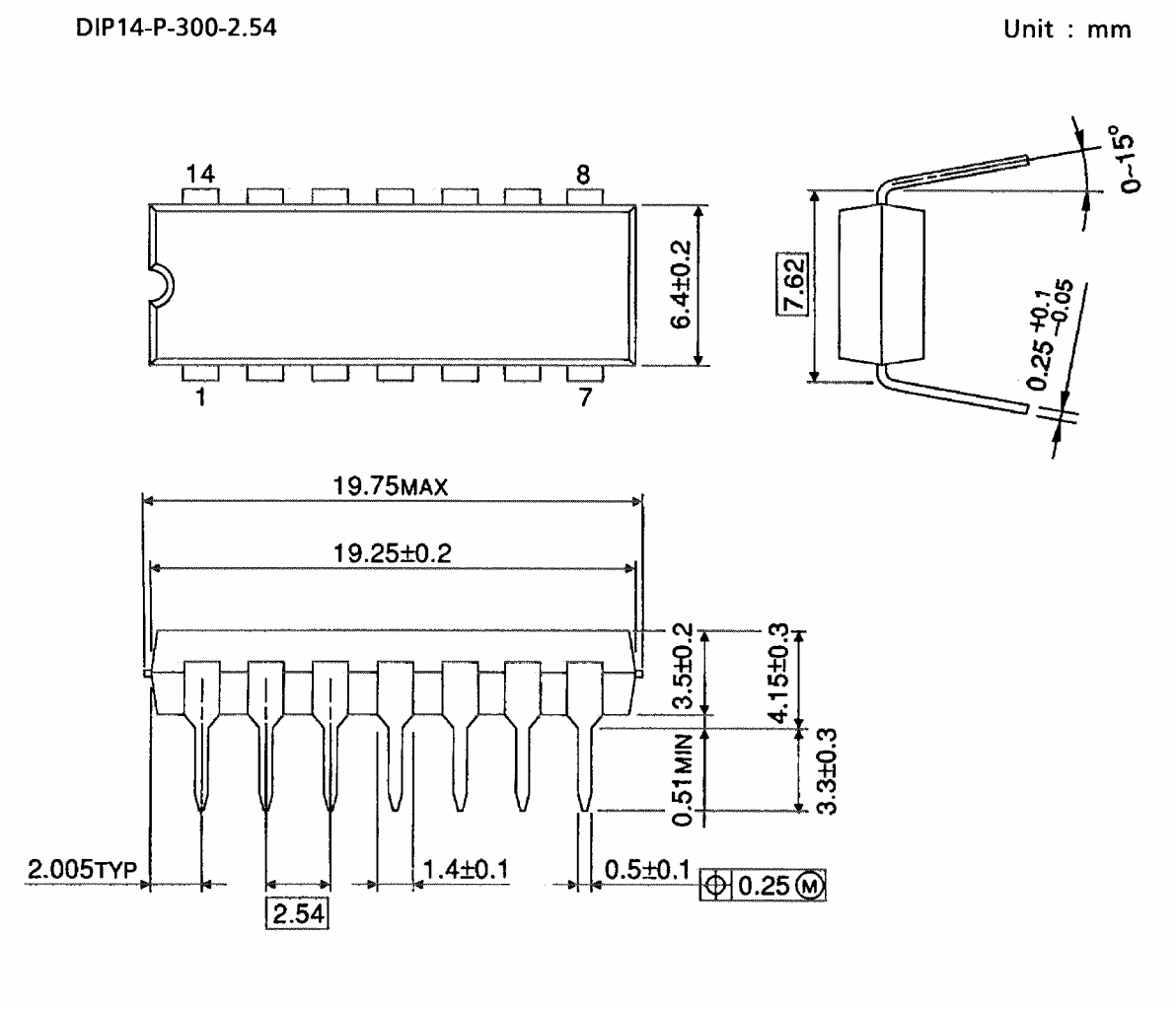

Weight: 0.96 g (typ.)

Package Dimensions

SOP14-P-300-1.27A Unit: mm

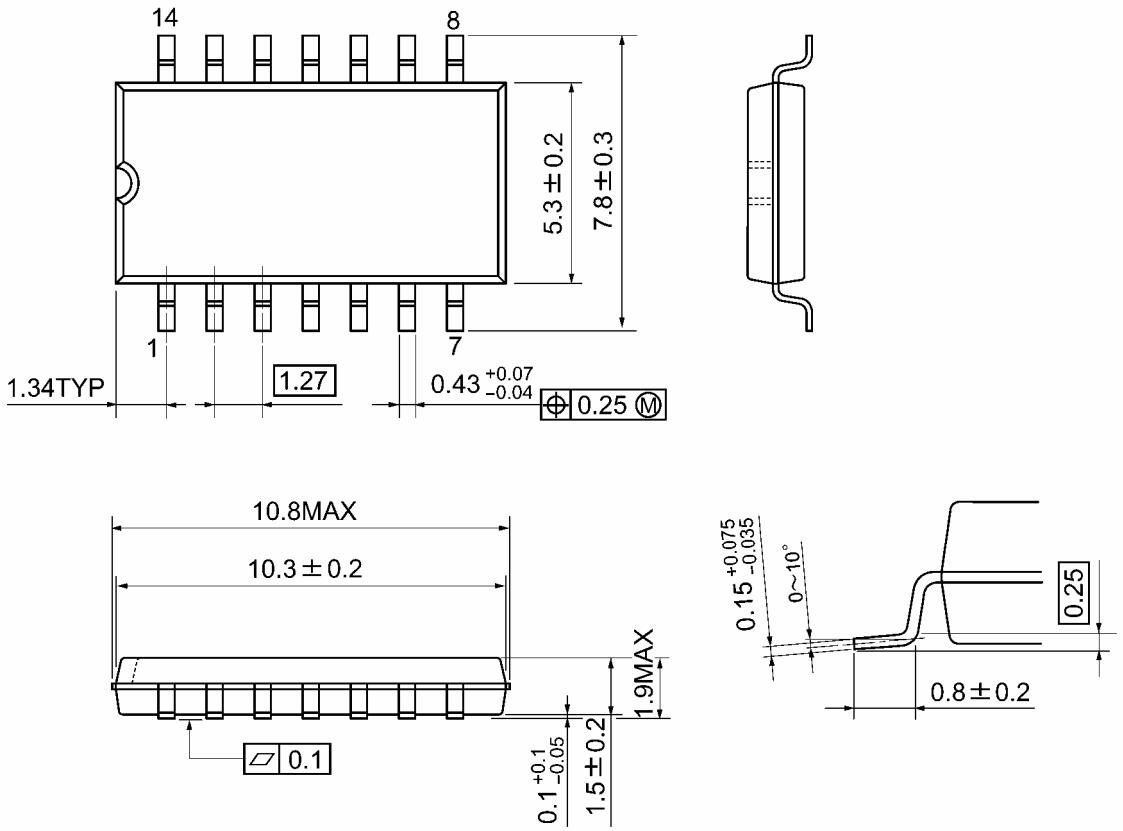

Weight: 0.18 g (typ.)

Package Dimensions (Note)

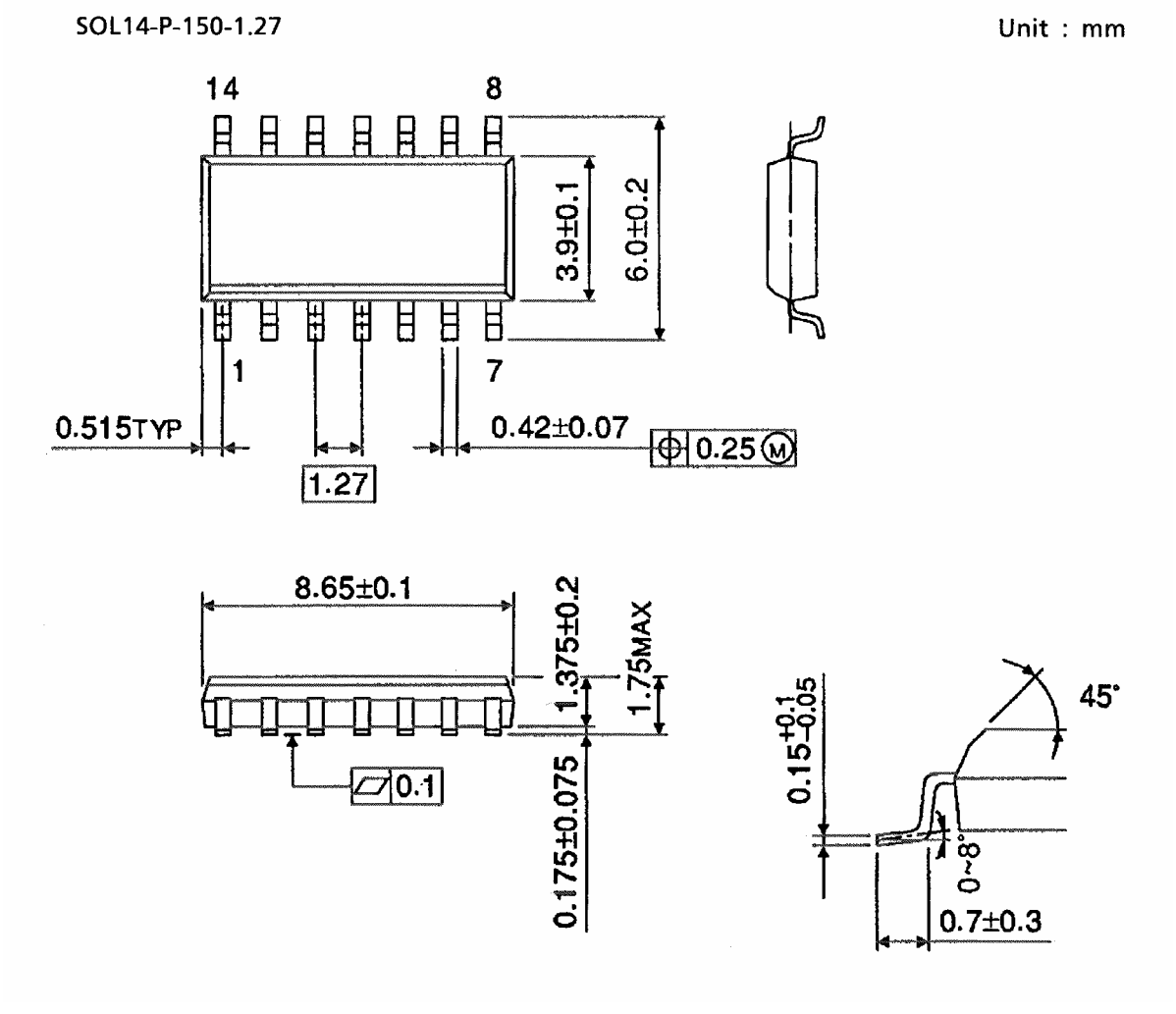

Note: This package is not available in Japan.

Weight: 0.12 g (typ.)

Package Dimensions

TSSOP14-P-0044-0.65A Unit: mm

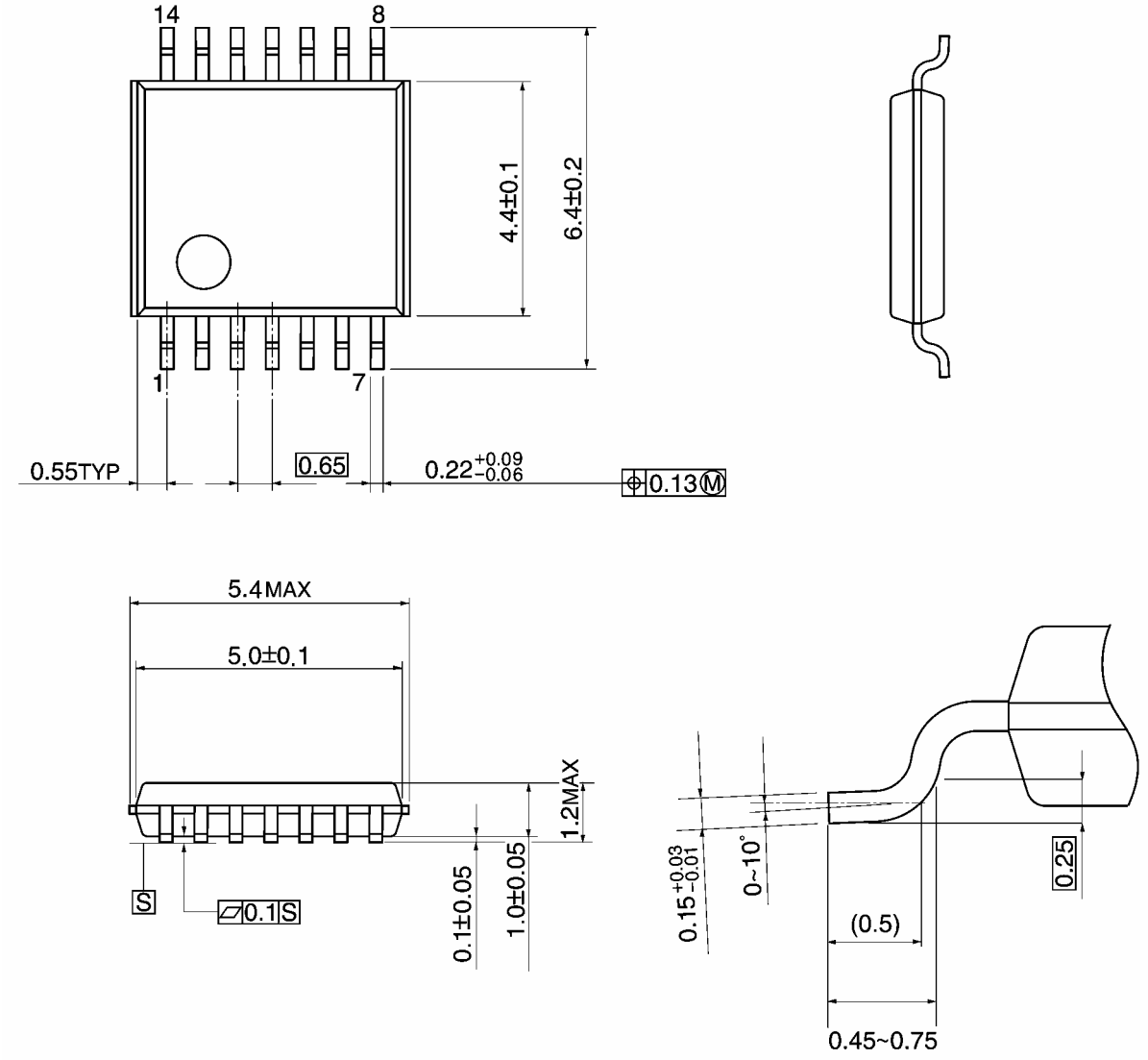

Weight: 0.06 g (typ.)

RESTRICTIONS ON PRODUCT USE

20070701-EN GENERAL

- The information contained herein is subject to change without notice.
- TOSHIBA is continually working to improve the quality and reliability of its products. Nevertheless, semiconductor devices in general can malfunction or fail due to their inherent electrical sensitivity and vulnerability to physical stress. It is the responsibility of the buyer, when utilizing TOSHIBA products, to comply with the standards of safety in making a safe design for the entire system, and to avoid situations in which a malfunction or failure of such TOSHIBA products could cause loss of human life, bodily injury or damage to property.
  In developing your designs, please ensure that TOSHIBA products are used within specified operating ranges as set forth in the most recent TOSHIBA products specifications. Also, please keep in mind the precautions and conditions set forth in the “Handling Guide for Semiconductor Devices,” or “TOSHIBA Semiconductor Reliability Handbook” etc.
- The TOSHIBA products listed in this document are intended for usage in general electronics applications (computer, personal equipment, office equipment, measuring equipment, industrial robotics, domestic appliances, etc.).These TOSHIBA products are neither intended nor warranted for usage in equipment that requires extraordinarily high quality and/or reliability or a malfunction or failure of which may cause loss of human life or bodily injury (“Unintended Usage”). Unintended Usage include atomic energy control instruments, airplane or spaceship instruments, transportation instruments, traffic signal instruments, combustion control instruments, medical instruments, all types of safety devices, etc.. Unintended Usage of TOSHIBA products listed in his document shall be made at the customer’s own risk.
- The products described in this document shall not be used or embedded to any downstream products of which manufacture, use and/or sale are prohibited under any applicable laws and regulations.
- The information contained herein is presented only as a guide for the applications of our products. No responsibility is assumed by TOSHIBA for any infringements of patents or other rights of the third parties which may result from its use. No license is granted by implication or otherwise under any patents or other rights of TOSHIBA or the third parties.
- Please contact your sales representative for product-by-product details in this document regarding RoHS compatibility. Please use these products in this document in compliance with all applicable laws and regulations that regulate the inclusion or use of controlled substances. Toshiba assumes no liability for damage or losses occurring as a result of noncompliance with applicable laws and regulations.