FAIRCHILD™

Is Now Part of

ON Semiconductor®

To learn more about ON Semiconductor, please visit our website at
www.onsemi.com

Please note: As part of the Fairchild Semiconductor integration, some of the Fairchild orderable part numbers will need to change in order to meet ON Semiconductor's system requirements. Since the ON Semiconductor product management systems do not have the ability to manage part nomenclature that utilizes an underscore (_), the underscore (_) in the Fairchild part numbers will be changed to a dash (-). This document may contain device numbers with an underscore (_). Please check the ON Semiconductor website to verify the updated device numbers. The most current and up-to-date ordering information can be found at www.onsemi.com. Please email any questions regarding the system integration to Fairchild_questions@onsemi.com.

ON Semiconductor and the ON Semiconductor logo are trademarks of Semiconductor Components Industries, LLC dba ON Semiconductor or its subsidiaries in the United States and/or other countries. ON Semiconductor owns the rights to a number of patents, trademarks, copyrights, trade secrets, and other intellectual property. A listing of ON Semiconductor's product/patent coverage may be accessed at www.onsemi.com/site/pdf/Patent-Marking.pdf. ON Semiconductor reserves the right to make changes without further notice to any products herein. ON Semiconductor makes no warranty, representation or guarantee regarding the suitability of its products for any particular purpose, nor does ON Semiconductor assume any liability arising out of the application or use of any product or circuit, and specifically disclaims any and all liability, including without limitation special, consequential or incidental damages. Buyer is responsible for its products and applications using ON Semiconductor products, including compliance with all laws, regulations and safety requirements or standards, regardless of any support or applications information provided by ON Semiconductor. "Typical" parameters which may be provided in ON Semiconductor data sheets and/or specifications can and do vary in different applications and actual performance may vary over time. All operating parameters, including "Typicals" must be validated for each customer application by customer's technical experts. ON Semiconductor does not convey any license under its patent rights nor the rights of others. ON Semiconductor products are not designed, intended, or authorized for use as a critical component in life support systems or any FDA Class 3 medical devices or medical devices with a same or similar classification in a foreign jurisdiction or any devices intended for implantation in the human body. Should Buyer purchase or use ON Semiconductor products for any such unintended or unauthorized application, Buyer shall indemnify and hold ON Semiconductor and its officers, employees, subsidiaries, affiliates, and distributors harmless against all claims, costs, damages, and expenses, and reasonable attorney fees arising out of, directly or indirectly, any claim of personal injury or death associated with such unintended or unauthorized use, even if such claim alleges that ON Semiconductor was negligent regarding the design or manufacture of the part. ON Semiconductor is an Equal Opportunity/Affirmative Action Employer. This literature is subject to all applicable copyright laws and is not for resale in any manner.

FAIRCHILD SEMICONDUCTOR®

June 2013

FLS0116
MOSFET Integrated Smart LED Lamp Driver IC with PFC Function

Features

- Built-in MOSFET(1 A / 550 V)
- Digitally Implemented Active-PFC Function
- No Additional Circuit for Achieving High PF
- Application Input Range: 80 V_{AC} ~ 308 V_{AC}
- Built-In HV Supplying Circuit: Self Biasing
- AOCP Function with Auto-Restart Mode
- Built-In Over-Temperature Protection (OTP)
- Cycle-by-Cycle Current Limit
- Current Sense Pin Open Protection
- Low Operating Current: 0.85 mA (Typical)
- Under-Voltage Lockout with 5 V Hysteresis
- Programmable Oscillation Frequency
- Programmable LED Current
- Analog Dimming Function
- Soft-Start Function
- Precise Internal Reference: ±3%

Applications

- LED Lamp for Decorative Lighting
- LED Lamp for Low-Power Lighting Fixture

Description

The FLS0116 LED lamp driver is a simple IC with integrated MOSFET and PFC function. The special "adopted digital" technique automatically detects input voltage condition and sends an internal reference signal to achieve high power factor. When AC input is applied to the IC, the PFC function is automatically enabled. When DC input is applied to the IC, the PFC function is automatically disabled. The FLS0116 does not need a bulk (electrolytic) capacitor for supply rail stability, which significantly improves LED lamp life.

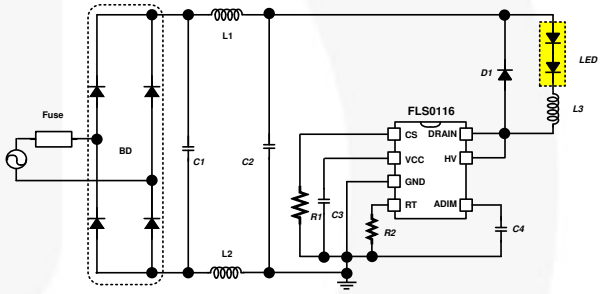

Figure 1. Typical Application

Ordering Information

Part Number	Operating Temperature Range	Package	Packing Method
FLS0116MX	-40°C to +125°C	7-Lead, Small-Outline Integrated Circuit (SOIC), JEDEC MS-012, .150-inch, Narrow Body	Tape & Reel

© 2012 Fairchild Semiconductor Corporation

Block Diagram

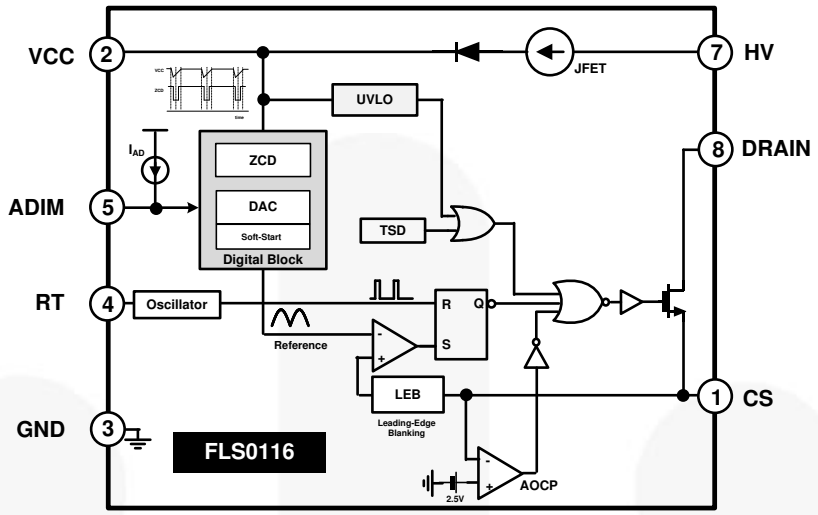

Figure 2. Block Diagram

Pin Configuration

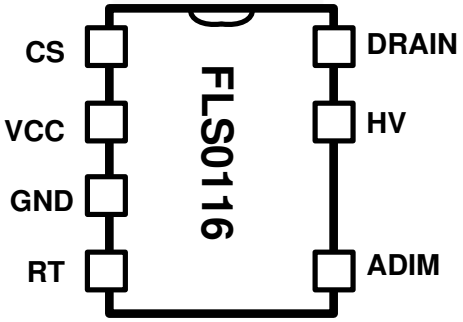

Figure 3. Pin Configuration

Pin Definitions

Pin #	Name	Description
1	CS	**Current Sense**. Limits output current, depending on the sensing resistor voltage. The CS pin is also used to set the LED current regulation.
2	VCC	**VCC**. Supply pin for stable IC operation; ZCD signal detection used for accurate PFC function.
3	GND	**GROUND**. Ground for the IC
4	RT	**RT**. Programmable operating frequency using an external resistor; the IC has pre-fixed frequency when this pin is open or floating.
5	ADIM	**Analog Dimming**. Connect to the internal current source. Use to change the output current using an external resistor. If ADIM is not used, connect a 0.1 µF bypass capacitor between the ADIM and GND.
7	HV	**High Voltage**. Connect to the high-voltage line and supply current to the IC.
8	DRAIN	**DRAIN**. The drain pin of internal MOSFET

Absolute Maximum Ratings

Stresses exceeding the absolute maximum ratings may damage the device. The device may not function or be operable above the recommended operating conditions and stressing the parts to these levels is not recommended. In addition, extended exposure to stresses above the recommended operating conditions may affect device reliability. The absolute maximum ratings are stress ratings only.

Symbol	Parameter		Min.	Max.	Unit
V_{CC}	IC Supply Voltage			20	V
HV	High Voltage Sensing			550	V
DRAIN	Internal Drain Voltage			550	V
V_{ADIM}	Analog Dimming			5	V
V_{RT}	RT Pin Voltage			5	V
V_{CS}	Allowable Current Sensing Detection Voltage			5	V
T_A	Operating Ambient Temperature Range		-40	+125	°C
T_J	Operating Junction Temperature		-40	+150	°C
T_{STG}	Storage Temperature Range		-65	+150	°C
θ_{JA}	Thermal Resistance Junction-Air[1,2]			135	°C/W
P_D	Power Dissipation			660	mW
ESD	Electrostatic Discharge Capability	Human Body Model, JESD22-A114		2000	V
		Charged Device Model, JESD22-C101		1000	

Notes:
1. Thermal resistance test board. Size: 76.2 mm x 114.3 mm x 1.6 mm (1S0P); JEDEC standard: JESD51-2, JESD51-3.
2. Assume no ambient airflow.

Electrical Characteristics

Typical values are at T_A = +25°C. Specifications to -40°C ~ 125°C are guaranteed by design based on final characterization results.

Symbol	Parameter	Condition	Min.	Typ.	Max.	Unit
V_{CC} Bias Section						
V_{CC}	V_{CC} Regulator Output Voltage	V_{HV}=100 V_{DC}	14.0	15.5	17.0	V
V_{CCST+}	UVLO Positive-Going Threshold	V_{CC} Increasing	12	13	14	V
V_{CCST-}	UVLO Negative-Going Threshold	V_{CC} Decreasing	7	8	9	V
V_{CCHYS}	UVLO Hysteresis		4	5	6	V
I_{HV}	HV Pin Current	V_{HV}=100 V_{DC}, RT=Open		0.85	1.20	mA
I_{ST}	Startup Current			120	150	µA
Switching Section						
f_{OSC}	Operating Frequency	R_T=5.95 kΩ	200	250	300	kHz
		R_T=87 kΩ	16	20	24	kHz
		R_T Open	40.5	45.0	49.5	kHz
t_{MIN}	Minimum On Time(3)			400		ns
D_{MAX}	Maximum Duty Cycle			50		%
t_{LEB}	Leading Edge Blanking Time(3)			350		ns
V_{RT}	Voltage Reference of RT Pin			1.5		V
Soft-Start Section						
t_{ss}	Soft-Start Time(3)	DC Mode	48	60	72	ms
		AC Mode		7		Periods
Reference Section						
V_{CS1}	Internal Reference Voltage of CS Pin	DC Mode	0.354	0.365	0.376	V
V_{CS2}		AC Mode(3)	0.485	0.500	0.515	
Protection Section						
OVP_{VCC}	Over-Voltage Protection on VCC Pin		17.7	18.7	19.7	V
V_{AOCP}	Abnormal OCP Level at CS Pin(3)			2.5		V
t_{AOCP}	Abnormal Detection Time(3)			70		ns
T_{TSDH}	Thermal Shutdown Threshold(3)		140	150		°C
T_{TSDHY}	Thermal Shutdown Threshold Hysteresis(3)			50		°C
Dimming Section						
$V_{ADIM(ST+)}$	Analog Dimming Positive Going Threshold(3)		3.15	3.50	3.85	V
$V_{ADIM(ST-)}$	Analog Dimming Negative Going Threshold(3)			0.50	0.75	V
I_{AD}	Internal Current Source for ADIM Pin		9	12	15	µA

Continued on the following page…

Electrical Characteristics (Continued)

Typical values are at T_A = +25°C. Specifications to -40°C ~ 125°C are guaranteed by design based on final characterization results.

Symbol	Parameter	Condition	Min.	Typ.	Max.	Unit
MOSFET Section						
BV_{DSS}	Breakdown Voltage	V_{CC}=0 V, I_D=250 µA	550			V
I_{LKMOS}	Internal MOSFET Leakage Current	V_{DS}=550 V_{DC}, V_{GS}=0 V			250	µA
$R_{ON(ON)}$	Drain-Source On Resistance(3)	V_{GS}=10 V, V_{DGS}=0 V, T_C=25°C		7.3	10.0	Ω
C_{ISS}	Input Capacitance(3)	V_{GS}=0 V,V_{DS}=25 V, f=1 MHz		135		pF
C_{OSS}	Output Capacitance(3)	V_{GS}=0 V,V_{DS}=25 V, f=1 MHz		21		pF
C_{RSS}	Reverse Transfer Capacitance(3)	V_{GS}=0 V,V_{DS}=25 V, f=1 MHz		3.2		pF
$t_{d(ON)}$	Turn-On Delay(3)	V_{DD}=350 V, I_D=1 A		10		ns
t_r	Rise Time(3)	V_{DD}=350 V, I_D=1 A		13.4		ns
$t_{d(OFF)}$	Turn-Off Delay(3)	V_{DD}=350 V, I_D=1 A		14.9		ns
t_f	Fall Time(3)	V_{DD}=350 V, I_D=1 A		36.8		ns

Note:

3. These parameters, although guaranteed, are not 100% tested in production.

Functional Description

The FLS0116 is a basic PWM controller for buck converter topology in Continuous Conduction Mode (CCM) with an intelligent PFC function that uses a digital control algorithm. An internal self-biasing circuit uses the high-voltage switching device. The IC does not need an auxiliary powering path to the VCC pin typical in flyback control ICs or PSR product family.

When the input voltage applied to the HV pin is within operating range (25 V to 500 V), the FLS0116 maintains a 15.5 V DC voltage at the VCC pin for stable operation. The UVLO block functions such that when the V_{CC} voltage rises higher than V_{CCST+}, the internal UVLO block releases and starts operation. Otherwise, the V_{CC} goes down to the V_{CCST-} and IC operation stops. Normally, the hysteresis function provides stable operation even if the input voltage is operating under very noisy or unstable circumstances.

The FLS0116 has a “smart” internal digital block for determining input condition: AC or DC. When an AC source with 50 Hz or 60 Hz is applied to the IC, the IC automatically changes its internal reference signal, which is similar to input signal, for creating high power factor. When a DC source connects to the IC, the internal reference immediately changes to DC.

Soft-Start Function

The FLS0116 has an internal soft-start function to reduce inrush current at startup. When the IC starts operation following an internal sequence, the internal reference slowly increases for a pre-determined fixed time. After this transient period, the internal reference goes to a steady-state level. In this time, the IC continually tries to find phase information from the VCC pin. If the IC succeeds in getting phase information, it automatically follows a similar shape reference made during the transient times, 7 periods. If not, the IC has a DC reference level.

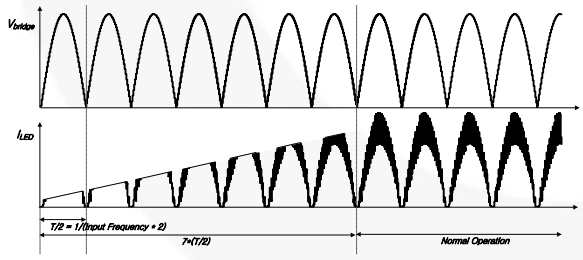

Figure 4. Soft-Start Function in AC Input Mode

Internal PFC Function: How to Achieve High Power Factor

The FLS0116 has a simple, “smart”, internal PFC function that does not require additional pins for detecting input phase information or an electrolytic capacitor for supply voltage stabilization. For achieving high PF, the FLS0116 does not use the rectification capacitor after the bridge diode. This is important because the IC instead uses fluctuation in the signal on the VCC pin. Basically, the VCC pin, which is supplies power for the IC, has voltage ripple as well as the rectification voltage after bridge, changing voltage level according to the V_{CC} capacitor value. Using this kind of voltage fluctuation on the VCC pin, the IC can detect the time reference and create the internal ZCD signal.

For precise and reliable internal reference for input voltage signal, the FLS0116 uses a digital technique (sigma/delta modulation) and creates a new internal signal (DAC_OUT) that has the same phase as the input voltage, as shown in Figure 5. This signal enters the final comparator and is compared with current information from the sensing resistor.

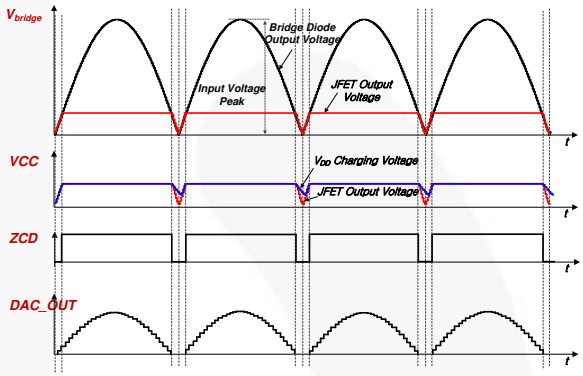

Figure 5. Internal PFC Function

Self-Biasing Function

The self-biasing function, using an HV device, can supply enough operating current to the IC and guarantee similar startup time across the whole input voltage range (80 V~308 V_{AC}). However, self-biasing has a weakness in high-voltage condition. Normally, the HV device acts as constant current source, so the internal HV device has power loss when high input voltage connects to the HV pin. This power loss is proportional to input voltage. To reduce this power loss, one of the possible solutions is an additional resistor between the input voltage source and the HV pin, as shown in Figure 6.

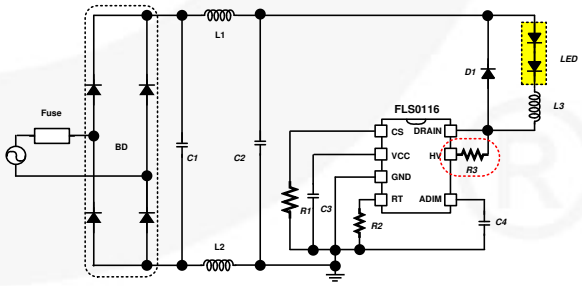

Figure 6. High-Voltage Application

Dimming Function

The FLS0116 uses the ADIM pin for analog or 0 V to 10 V dimming by using a resistive divider. The peak voltage of internal reference, which is DAC_OUT signal in Figure 5, is changed by the V_{ADIM} level, as shown in Figure 7, and has different peak level according to the operating mode.

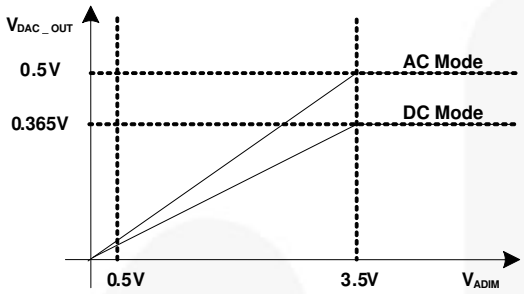

Figure 7. V_{ADIM} vs. $V_{DAC_OUT(peak)}$

Inductor Design

The fixed internal duty ratio range is below 50%, or around 400 ns, from a timing point of view. The range is dependent on the input voltage and number of LEDs in its string.

Minimum duty is calculated as:

$$D_{\min} = \frac{n \cdot V_f}{\eta \cdot V_{in(\max)}} \quad (1)$$

where:

η = efficiency of system;
$V_{IN(max)}$ = maximum input voltage;
V_f = forward drop voltage of LED; and
n = LED number in series connection.

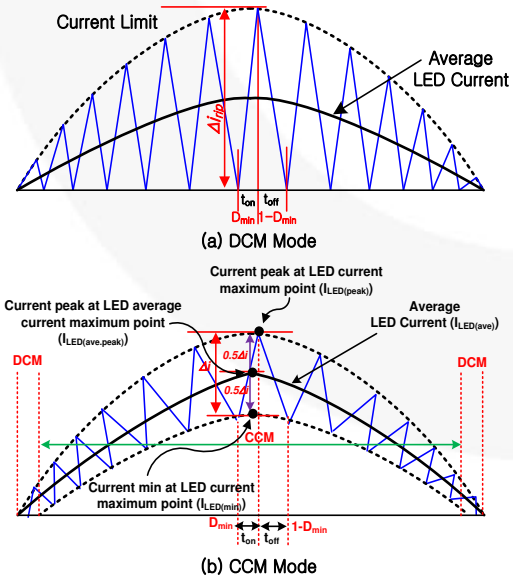

Figure 8. DCM and CCM Operation

In DCM Mode, inductance is:

$$L_m = \frac{n \cdot V_f \cdot (1 - D_{\min})}{f_s \cdot \Delta i_{rip}} \; [H] \quad (2)$$

If the peak current is fixed at 350 mApk, the formula for the peak current is:

$$I_{LED(ave.peak)} = \Delta i_{con} + \frac{\Delta i_{rip}}{2} \; [A] \quad (3)$$

In FL7701, the LED RMS current determines the inductance parameter. To drive for CCM Mode, define LED RMS current first, as:

$$I_{LED(rms)} = \frac{I_{LED(ave.peak)}}{\sqrt{2}} \; [A] \quad (4)$$

Substituting Equation (2) for Equation (4), the inductance of inductor is obtained.

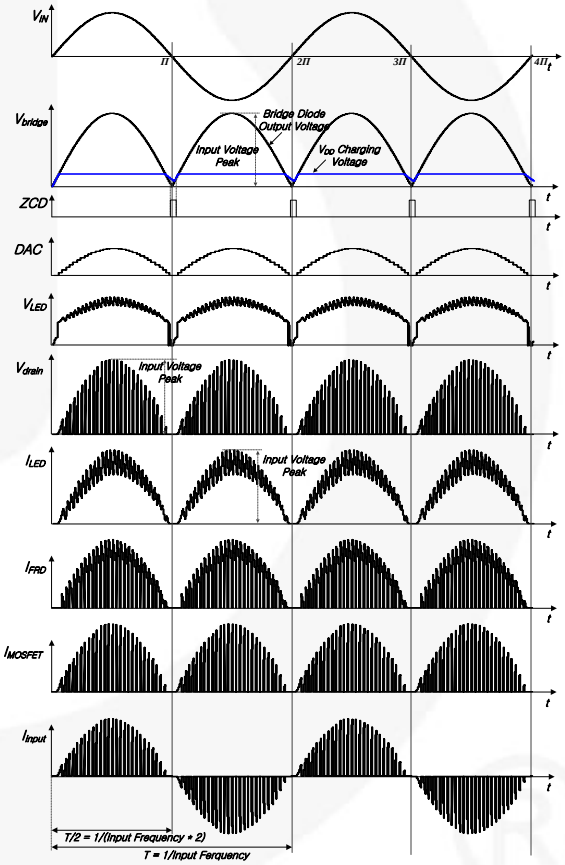

Figure 9. Typical Performance Characteristics

Example Application Circuits

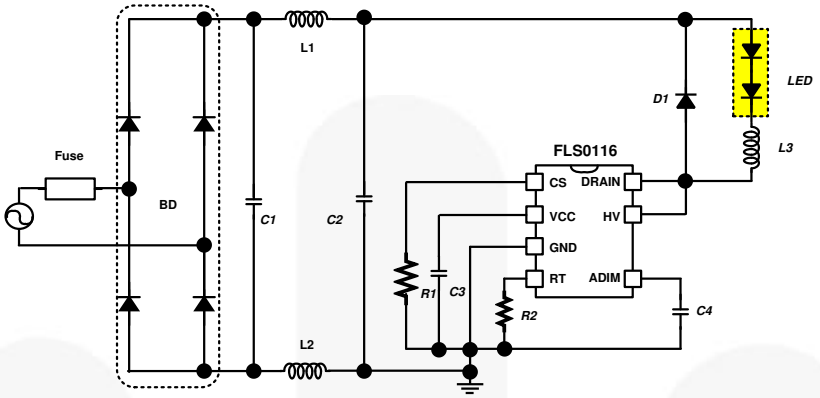

Figure 10. Application Circuit without Electrolytic Capacitor

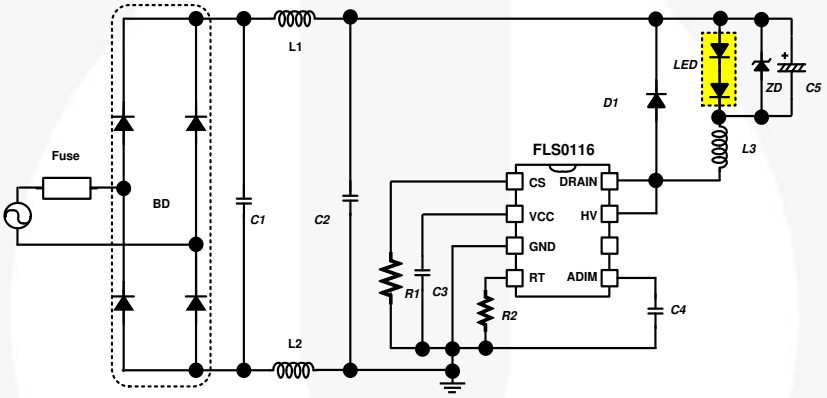

Figure 11. Application Circuit with Electrolytic Capacitor

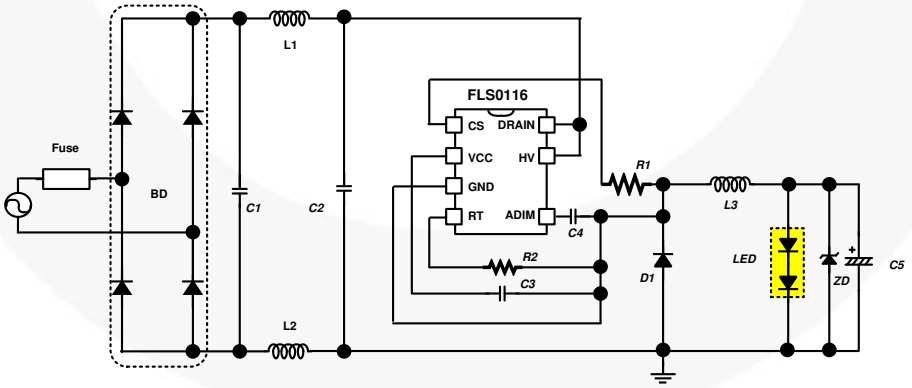

Figure 12. Application Circuit of High-Side Operation with Electrolytic Capacitor

Typical Characteristics

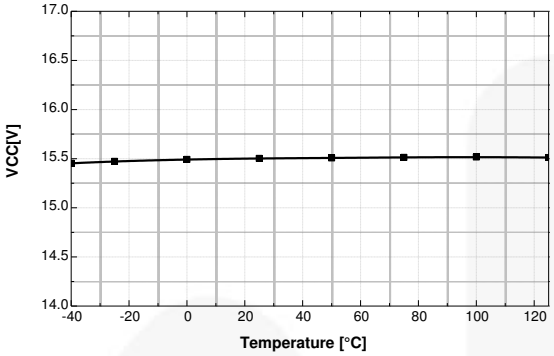

Figure 13. V_{CC} vs. Temperature

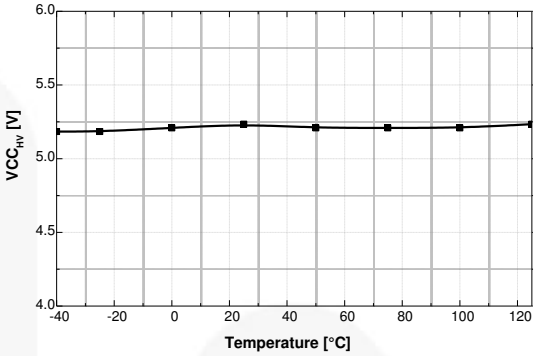

Figure 14. V_{CCHYS} vs. Temperature

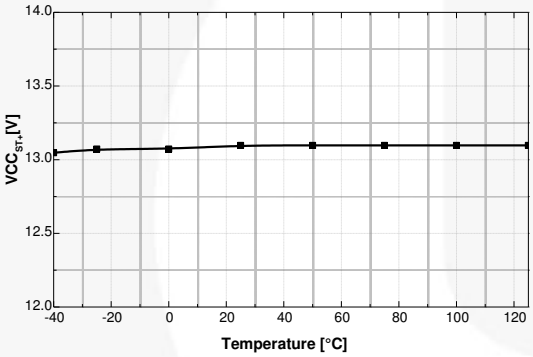

Figure 15. V_{CCST+} vs. Temperature

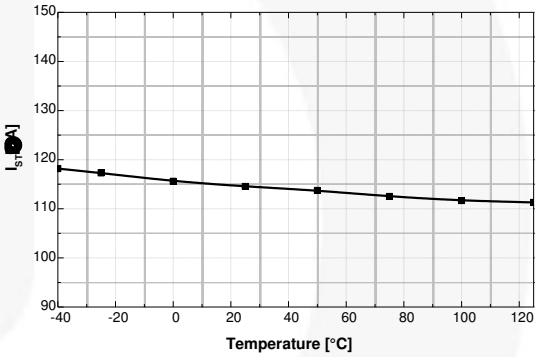

Figure 16. I_{ST} vs. Temperature

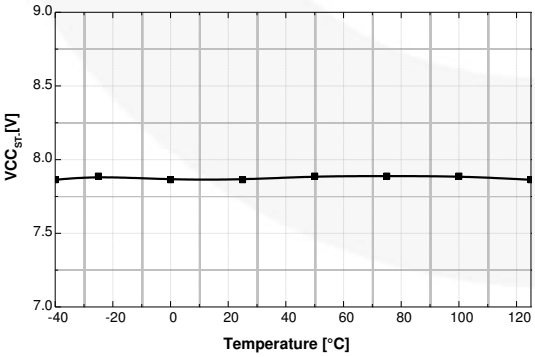

Figure 17. V_{CCST-} vs. Temperature

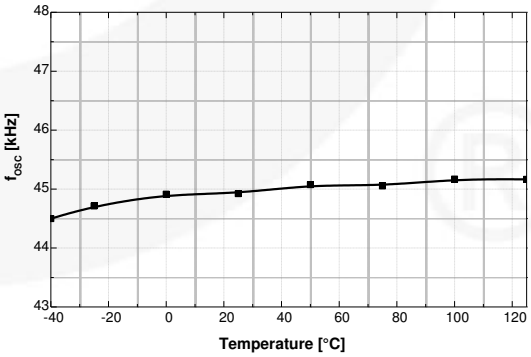

Figure 18. f_{OSC} vs. Temperature (RT=Open)

Typical Characteristics

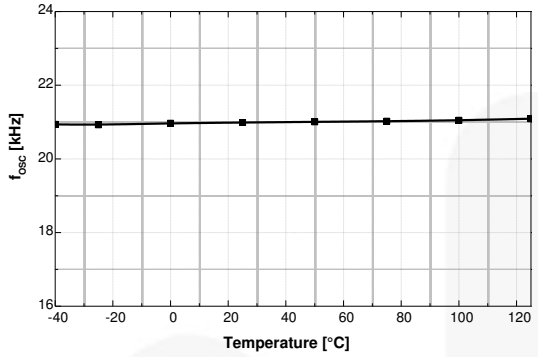

Figure 19. f_{OSC} vs. Temperature (RT=87kΩ)

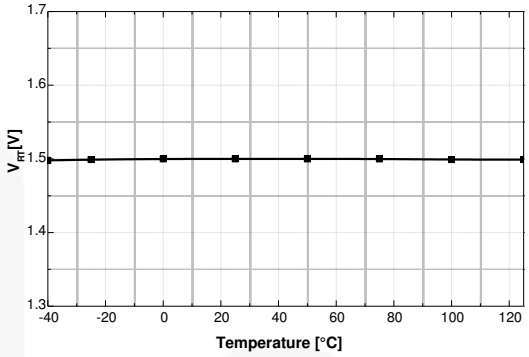

Figure 20. V_{RT} vs. Temperature

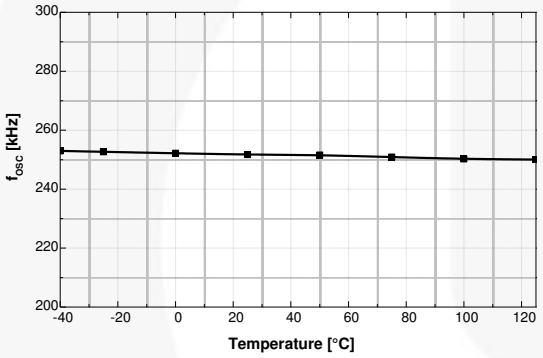

Figure 21. f_{OSC} vs. Temperature (RT=5.95kΩ)

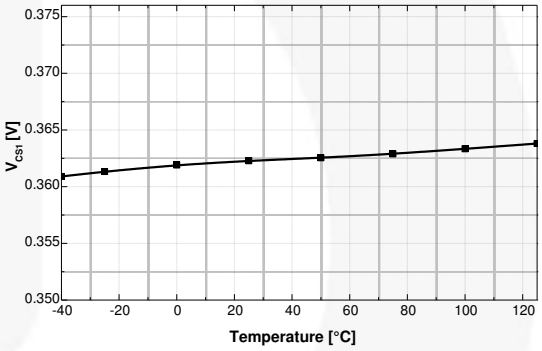

Figure 22. V_{CS} vs. Temperature

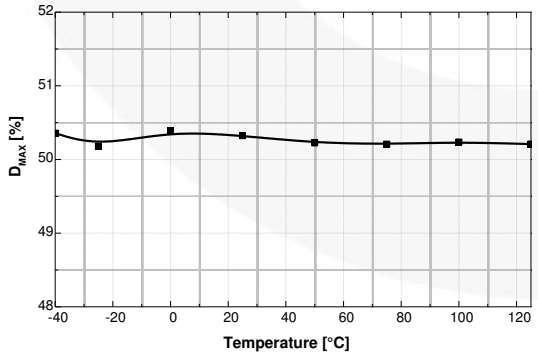

Figure 23. D_{MAX} vs. Temperature

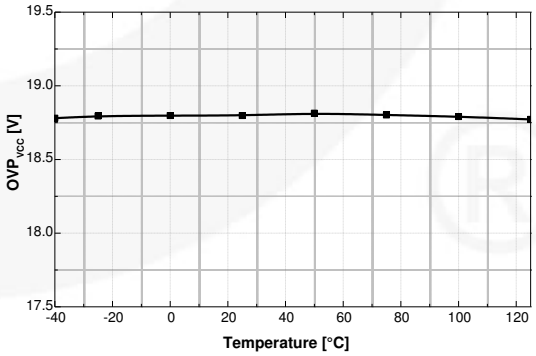

Figure 24. OVP_{VCC} vs. Temperature

Typical Characteristics

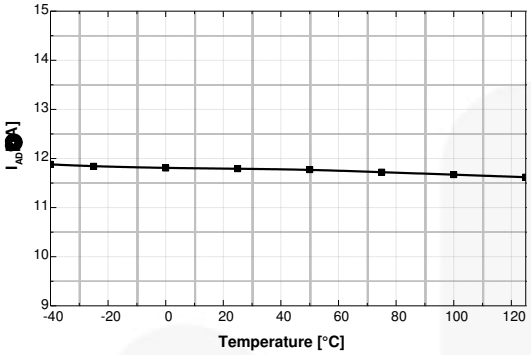

Figure 25. I_{AD} vs. Temperature

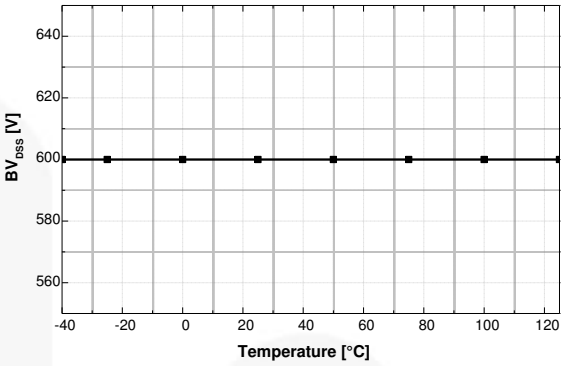

Figure 26. BV_{DSS} vs. Temperature

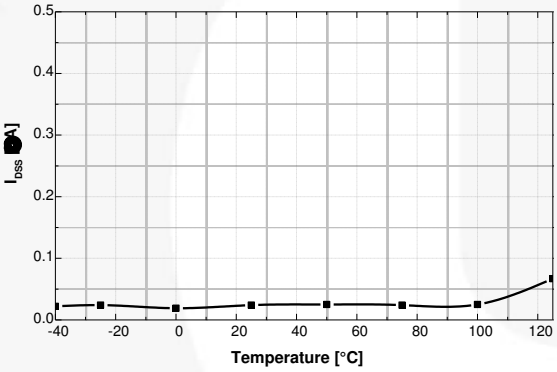

Figure 27. I_{DSS} vs. Temperature

Physical Dimensions

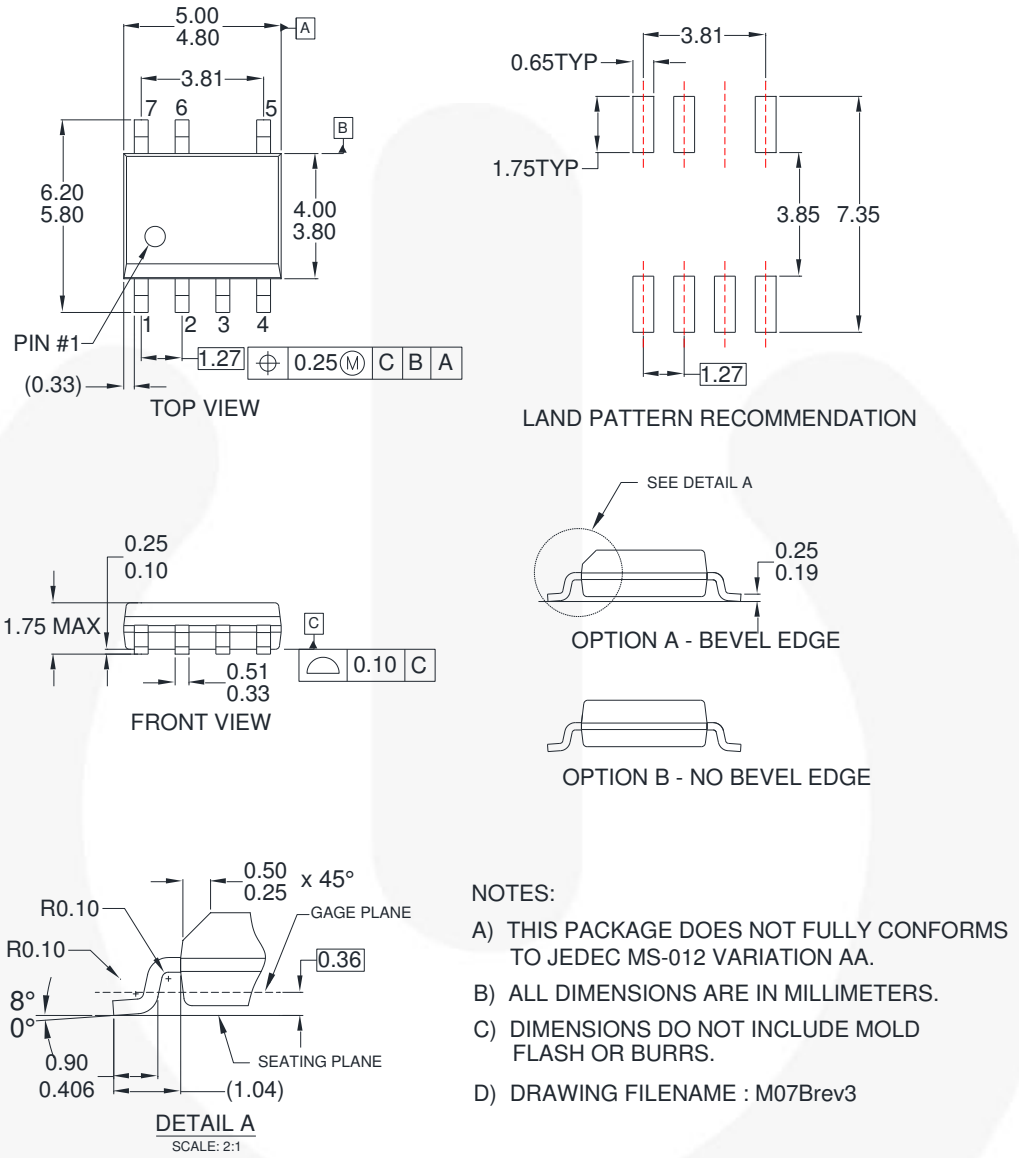

Figure 28. 7-Lead, Small-Outline Integrated Circuit (SOIC), JEDEC MS-012, .150-Inch Narrow Body

Package drawings are provided as a service to customers considering Fairchild components. Drawings may change in any manner without notice. Please note the revision and/or date on the drawing and contact a Fairchild Semiconductor representative to verify or obtain the most recent revision. Package specifications do not expand the terms of Fairchild's worldwide terms and conditions, specifically the warranty therein, which covers Fairchild products.

Always visit Fairchild Semiconductor's online packaging area for the most recent package drawings: http://www.fairchildsemi.com/packaging/.

FAIRCHILD SEMICONDUCTOR®

TRADEMARKS

The following includes registered and unregistered trademarks and service marks, owned by Fairchild Semiconductor and/or its global subsidiaries, and is not intended to be an exhaustive list of all such trademarks.

2Cool™
AccuPower™
AX-CAP®*
BitSiC™
Build it Now™
CorePLUS™
CorePOWER™
CROSSVOLT™
CTL™
Current Transfer Logic™
DEUXPEED®
Dual Cool™
EcoSPARK®
EfficientMax™
ESBC™
F®
Fairchild®
Fairchild Semiconductor®
FACT Quiet Series™
FACT®
FAST®
FastvCore™
FETBench™
FPS™
F-PFS™
FRFET®
Global Power Resource℠
GreenBridge™
Green FPS™
Green FPS™ e-Series™
G*max*™
GTO™
IntelliMAX™
ISOPLANAR™
Making Small Speakers Sound Louder and Better™
MegaBuck™
MICROCOUPLER™
MicroFET™
MicroPak™
MicroPak2™
MillerDrive™
MotionMax™
mWSaver™
OptoHiT™
OPTOLOGIC®
OPTOPLANAR®
PowerTrench®
PowerXS™
Programmable Active Droop™
QFET®
QS™
Quiet Series™
RapidConfigure™
™
Saving our world, 1mW/W/kW at a time™
SignalWise™
SmartMax™
SMART START™
Solutions for Your Success™
SPM®
STEALTH™
SuperFET®
SuperSOT™-3
SuperSOT™-6
SuperSOT™-8
SupreMOS®
SyncFET™
Sync-Lock™
SYSTEM GENERAL®*
TinyBoost™
TinyBuck™
TinyCalc™
TinyLogic®
TINYOPTO™
TinyPower™
TinyPWM™
TinyWire™
TranSiC™
TriFault Detect™
TRUECURRENT®*
µSerDes™
µSerDes
UHC®
Ultra FRFET™
UniFET™
VCX™
VisualMax™
VoltagePlus™
XS™

* Trademarks of System General Corporation, used under license by Fairchild Semiconductor.

DISCLAIMER

FAIRCHILD SEMICONDUCTOR RESERVES THE RIGHT TO MAKE CHANGES WITHOUT FURTHER NOTICE TO ANY PRODUCTS HEREIN TO IMPROVE RELIABILITY, FUNCTION, OR DESIGN. FAIRCHILD DOES NOT ASSUME ANY LIABILITY ARISING OUT OF THE APPLICATION OR USE OF ANY PRODUCT OR CIRCUIT DESCRIBED HEREIN; NEITHER DOES IT CONVEY ANY LICENSE UNDER ITS PATENT RIGHTS, NOR THE RIGHTS OF OTHERS. THESE SPECIFICATIONS DO NOT EXPAND THE TERMS OF FAIRCHILD'S WORLDWIDE TERMS AND CONDITIONS, SPECIFICALLY THE WARRANTY THEREIN, WHICH COVERS THESE PRODUCTS.

LIFE SUPPORT POLICY

FAIRCHILD'S PRODUCTS ARE NOT AUTHORIZED FOR USE AS CRITICAL COMPONENTS IN LIFE SUPPORT DEVICES OR SYSTEMS WITHOUT THE EXPRESS WRITTEN APPROVAL OF FAIRCHILD SEMICONDUCTOR CORPORATION.

As used herein:

1. Life support devices or systems are devices or systems which, (a) are intended for surgical implant into the body or (b) support or sustain life, and (c) whose failure to perform when properly used in accordance with instructions for use provided in the labeling, can be reasonably expected to result in a significant injury of the user.
2. A critical component in any component of a life support, device, or system whose failure to perform can be reasonably expected to cause the failure of the life support device or system, or to affect its safety or effectiveness.

ANTI-COUNTERFEITING POLICY

Fairchild Semiconductor Corporation's Anti-Counterfeiting Policy. Fairchild's Anti-Counterfeiting Policy is also stated on our external website, www.fairchildsemi.com, under Sales Support.

Counterfeiting of semiconductor parts is a growing problem in the industry. All manufacturers of semiconductor products are experiencing counterfeiting of their parts. Customers who inadvertently purchase counterfeit parts experience many problems such as loss of brand reputation, substandard performance, failed applications, and increased cost of production and manufacturing delays. Fairchild is taking strong measures to protect ourselves and our customers from the proliferation of counterfeit parts. Fairchild strongly encourages customers to purchase Fairchild parts either directly from Fairchild or from Authorized Fairchild Distributors who are listed by country on our web page cited above. Products customers buy either from Fairchild directly or from Authorized Fairchild Distributors are genuine parts, have full traceability, meet Fairchild's quality standards for handling and storage and provide access to Fairchild's full range of up-to-date technical and product information. Fairchild and our Authorized Distributors will stand behind all warranties and will appropriately address any warranty issues that may arise. Fairchild will not provide any warranty coverage or other assistance for parts bought from Unauthorized Sources. Fairchild is committed to combat this global problem and encourage our customers to do their part in stopping this practice by buying direct or from authorized distributors.

PRODUCT STATUS DEFINITIONS

Definition of Terms

Datasheet Identification	Product Status	Definition
Advance Information	Formative / In Design	Datasheet contains the design specifications for product development. Specifications may change in any manner without notice.
Preliminary	First Production	Datasheet contains preliminary data; supplementary data will be published at a later date. Fairchild Semiconductor reserves the right to make changes at any time without notice to improve design.
No Identification Needed	Full Production	Datasheet contains final specifications. Fairchild Semiconductor reserves the right to make changes at any time without notice to improve the design.
Obsolete	Not In Production	Datasheet contains specifications on a product that is discontinued by Fairchild Semiconductor. The datasheet is for reference information only.

Rev. I64

ON Semiconductor and ON are trademarks of Semiconductor Components Industries, LLC dba ON Semiconductor or its subsidiaries in the United States and/or other countries. ON Semiconductor owns the rights to a number of patents, trademarks, copyrights, trade secrets, and other intellectual property. A listing of ON Semiconductor's product/patent coverage may be accessed at www.onsemi.com/site/pdf/Patent−Marking.pdf. ON Semiconductor reserves the right to make changes without further notice to any products herein. ON Semiconductor makes no warranty, representation or guarantee regarding the suitability of its products for any particular purpose, nor does ON Semiconductor assume any liability arising out of the application or use of any product or circuit, and specifically disclaims any and all liability, including without limitation special, consequential or incidental damages. Buyer is responsible for its products and applications using ON Semiconductor products, including compliance with all laws, regulations and safety requirements or standards, regardless of any support or applications information provided by ON Semiconductor. "Typical" parameters which may be provided in ON Semiconductor data sheets and/or specifications can and do vary in different applications and actual performance may vary over time. All operating parameters, including "Typicals" must be validated for each customer application by customer's technical experts. ON Semiconductor does not convey any license under its patent rights nor the rights of others. ON Semiconductor products are not designed, intended, or authorized for use as a critical component in life support systems or any FDA Class 3 medical devices or medical devices with a same or similar classification in a foreign jurisdiction or any devices intended for implantation in the human body. Should Buyer purchase or use ON Semiconductor products for any such unintended or unauthorized application, Buyer shall indemnify and hold ON Semiconductor and its officers, employees, subsidiaries, affiliates, and distributors harmless against all claims, costs, damages, and expenses, and reasonable attorney fees arising out of, directly or indirectly, any claim of personal injury or death associated with such unintended or unauthorized use, even if such claim alleges that ON Semiconductor was negligent regarding the design or manufacture of the part. ON Semiconductor is an Equal Opportunity/Affirmative Action Employer. This literature is subject to all applicable copyright laws and is not for resale in any manner.

PUBLICATION ORDERING INFORMATION

LITERATURE FULFILLMENT:
Literature Distribution Center for ON Semiconductor
19521 E. 32nd Pkwy, Aurora, Colorado 80011 USA
Phone: 303−675−2175 or 800−344−3860 Toll Free USA/Canada
Fax: 303−675−2176 or 800−344−3867 Toll Free USA/Canada
Email: orderlit@onsemi.com

N. American Technical Support: 800−282−9855 Toll Free USA/Canada
Europe, Middle East and Africa Technical Support:
Phone: 421 33 790 2910
Japan Customer Focus Center
Phone: 81−3−5817−1050

ON Semiconductor Website: **www.onsemi.com**

Order Literature: http://www.onsemi.com/orderlit

For additional information, please contact your local Sales Representative