SDLS007 D2635, JANUARY 1981 – REVISED MARCH 1988

- **8-Bit Parallel Storage Register Inputs ('LS597)**
- **Parallel 3-State I/O, Storage Register Inputs, Shift Register Outputs ('LS598)**
- **Shift Register has Direct Overriding Load and Clear**
- **Accurate Shift-Frequency . . . DC to 20 MHz**

description

The 'LS597 comes in a 16-pin package and consists of an 8-bit storage latch feeding a parallel-in, serial-out 8-bit shift register. Both the storage register and shift register have positive-edge triggered clocks. The shift register also has direct load (from storage) and clear inputs.

The 'LS598 comes in a 20-pin package and has all the features of the 'LS597 plus 3-state I/O ports that provide parallel shift register outputs and also has multiplexed serial data inputs.

SN54LS597 . . . J OR W PACKAGE
SN74LS597 . . . N PACKAGE
(TOP VIEW)

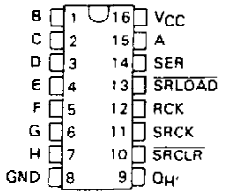

SN54LS597 . . . FK PACKAGE
(TOP VIEW)

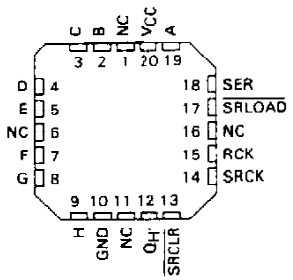

SN54LS598 . . . J OR W PACKAGE
LS598 . . . DW OR N PACKAGE
(TOP VIEW)

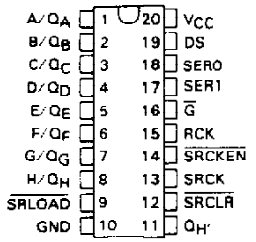

SN54LS598 . . . FK PACKAGE
(TOP VIEW)

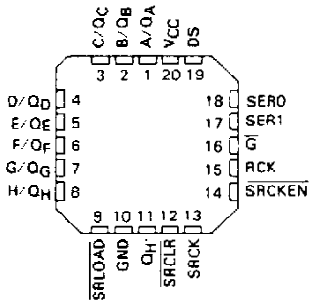

NC - No internal connection

PRODUCTION DATA documents contain information current as of publication date. Products conform to specifications per the terms of Texas Instruments standard warranty. Production processing does not necessarily include testing of all parameters.

schematics of inputs and outputs

EQUIVALENT OF SERIAL AND A THRU H INPUTS

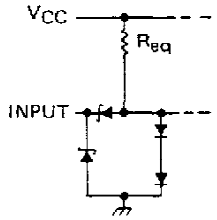

SERIAL: R_{eq} = 20 kΩ NOM
A thru H: R_{eq} = 25 kΩ NOM

EQUIVALENT OF SRCK INPUT ('LS598 ONLY)

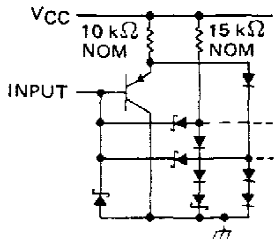

EQUIVALENT OF ALL OTHER INPUTS

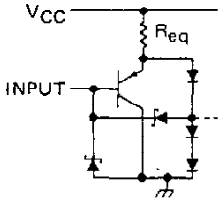

('LS597) RCK, SRCK: R_{eq} = 10 kΩ NOM
('LS598) RCK: R_{eq} = 10 kΩ NOM
ALL OTHER: R_{eq} = 13 kΩ NOM

TYPICAL OF Q_H' OUTPUTS

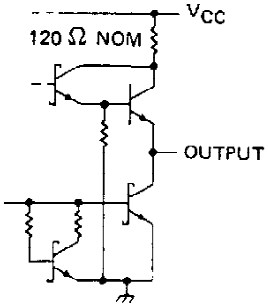

TYPICAL OF Q_A THRU Q_H OUTPUTS ('LS598 ONLY)

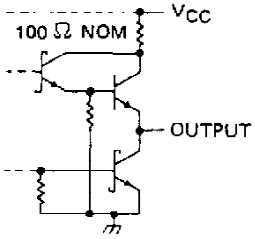

logic symbols†

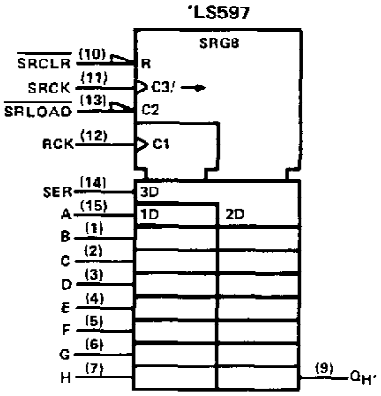

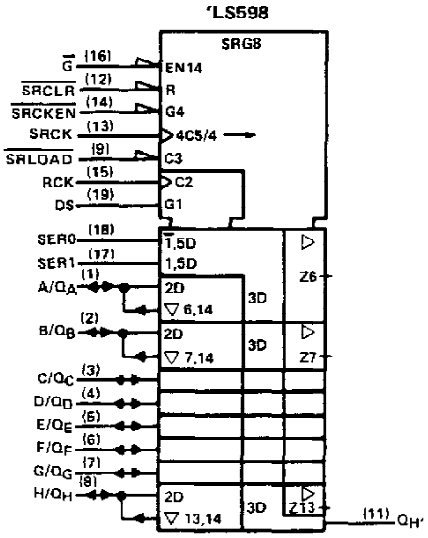

†This symbol is in accordance with ANSI/IEEE Std. 91-1984 and IEC Publication 617-12.
Pin numbers shown are for DW, J, N, and W packages.

logic diagram (positive logic)

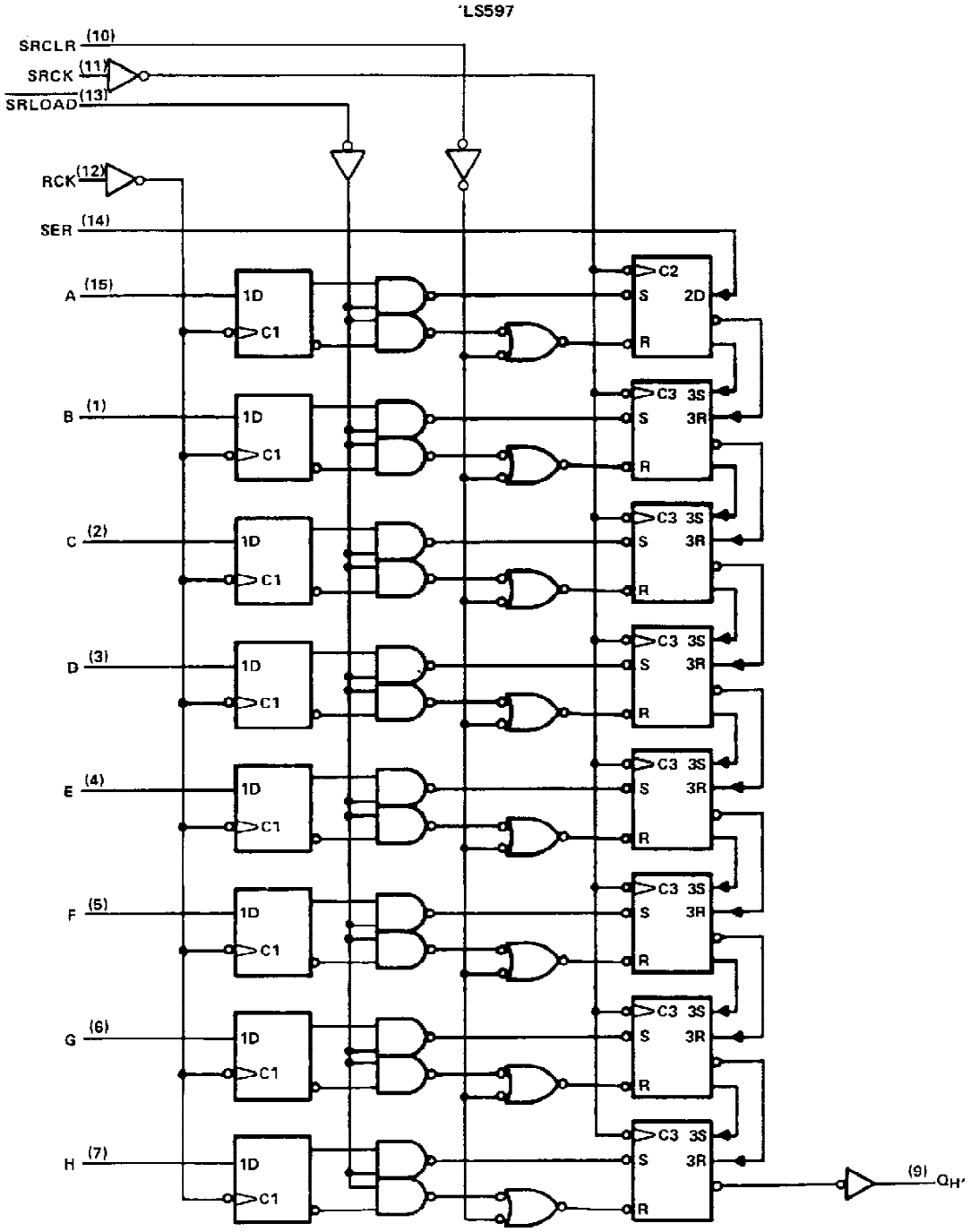

Pin numbers shown are for DW, J, N, and W packages.

logic diagram (positive logic)

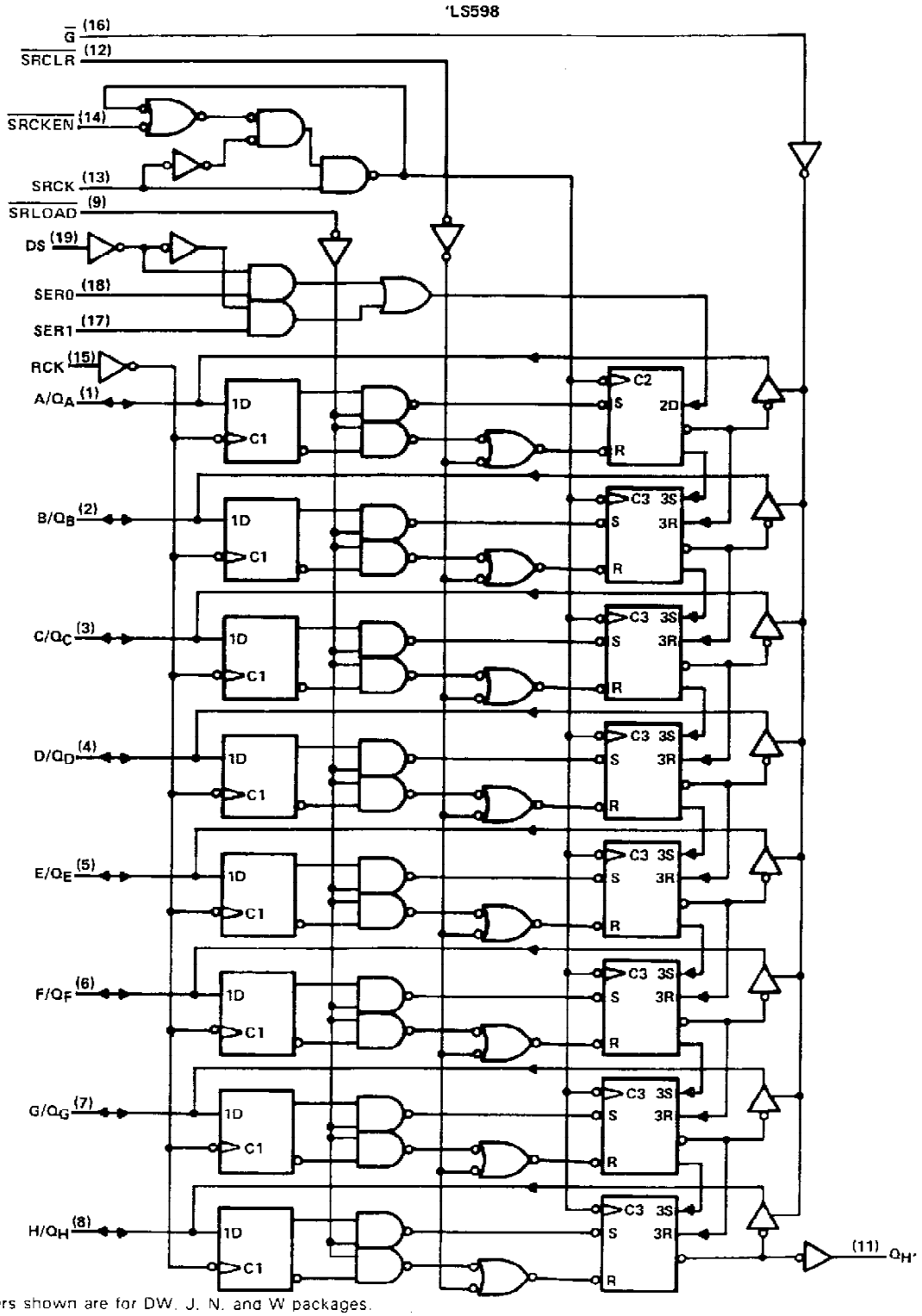

Pin numbers shown are for DW, J, N, and W packages.

absolute maximum ratings over operating free-air temperature range (unless otherwise noted)

Supply voltage, V_{CC} (see Note 1) . . . . . 7 V
Input voltage (excluding I/O ports) . . . . . 7 V
Off-state output voltage (including I/O ports) . . . . . 5.5 V
Operating free-air temperature range: SN54LS597, SN54LS598 . . . . . −55°C to 125°C
SN74LS597, SN74LS598 . . . . . 0°C to 70°C
Storage temperature range . . . . . −65°C to 150°C

NOTE 1: Voltage values are with respect to the network ground terminal.

recommended operating conditions

				SN54LS'			SN74LS'			UNIT
				MIN	NOM	MAX	MIN	NOM	MAX	
V_{CC}	Supply voltage			4.5	5	5.5	4.75	5	5.25	V
V_{IH}	High-level input voltage			2			2			V
V_{IL}	Low-level input voltage					0.7			0.8	V
I_{OH}	High-level output current	Q_H'				−1			−1	mA
		Q_A thru Q_H, 'LS598 only				−1			−2.6	
I_{OL}	Low-level output current	Q_H'				8			16	mA
		Q_A thru Q_H, 'LS598 only				12			24	
f_{SCK}	Shift clock frequency			0		20	0		20	MHz
t_w	Pulse duration	SRCK	high	15			15			ns
			low	35			35			
		RCK		20			20			
		$\overline{SRCLR}$		20			20			
		$\overline{SRLOAD}$		40			40			
t_{su}	Setup time	Data before RCK ↑		20			20			ns
		DS before SRCK ↑ ('LS598 only)		30			30			
		$\overline{SRCKEN}$ low before SRCK ↑ ('LS598 only)		20			20			
		$\overline{SRCLR}$ inactive before SRCK ↑		25			25			
		$\overline{SRLOAD}$ inactive before SRCK ↑		30			30			
		RCK ↑ before $\overline{SRLOAD}$ ↑ (see Note 2)		40			40			
		SER before SRCK ↑		20			20			
t_h	Hold time			0			0			ns
T_A	Operating free-air temperature			−55		125	0		70	°C

NOTE 2: The RCK ↑ before $\overline{SRLOAD}$ ↑ setup time ensures the data saved by RCK ↑ will also be loaded into the shift register.

electrical characteristics over recommended operating free-air temperature range (unless otherwise noted)

PARAMETER			TEST CONDITIONS†			SN54LS' MIN	SN54LS' TYP‡	SN54LS' MAX	SN74LS' MIN	SN74LS' TYP‡	SN74LS' MAX	UNIT
V_{IK}			V_{CC} = MIN,	I_I = −18 mA				−1.5			−1.5	V
V_{OH}	'LS598 Q		V_{CC} = MIN, V_{IL} = MAX	V_{IH} = 2 V,	I_{OH} = −1 mA	2.4	3.2					V
					I_{OH} = −2.6 mA				2.4	3.1		
	Q_H'				I_{OH} = −1 mA	2.4	3.2		2.4	3.2		
V_{OL}	'LS598 Q		V_{CC} = MIN, V_{IL} = MAX	V_{IH} = 2 V,	I_{OL} = 12 mA		0.25	0.4		0.25	0.4	V
					I_{OL} = 24 mA					0.35	0.5	
	Q_H'				I_{OL} = 8 mA		0.25	0.4		0.25	0.4	
					I_{OL} = 16 mA					0.35	0.5	
I_{OZH}	'LS598 Q		V_{CC} = MAX, V_O = 2.7 V	V_{IH} = 2 V,	V_{IL} = MAX,			20			20	μA
I_{OZL}	'LS598 Q		V_{CC} = MAX, V_O = 0.4 V	V_{IH} = 2 V,	V_{IL} = MAX,			−0.4			−0.4	mA
I_I	'LS598 Q		V_{CC} = MAX		V_I = 5.5 V			0.1			0.1	mA
	Others				V_I = 7 V			0.1			0.1	
I_{IH}			V_{CC} = MAX,	V_I = 2.7 V				20			20	μA
I_{IL}	'LS598 SRCK		V_{CC} = MAX,	V_I = 0.4 V				−0.8			−0.8	mA
	SER, A Thru H							−0.4			−0.4	
	Others							−0.2			−0.2	
I_{OS}§	'LS598 Q		V_{CC} = MAX,	V_O = 0 V		−30		−130	−30		−130	mA
	Q_H'					−20		−100	−20		−100	
I_{CC}	'LS597	I_{CCH}	V_{CC} = MAX, All possible inputs grounded, All outputs open				35	53		35	53	mA
		I_{CCL}					35	53		35	53	
	'LS598	I_{CCH}					45	68		45	68	
		I_{CCL}					54	80		54	80	
		I_{CCZ}					56	85		56	85	

† For conditions shown as MIN or MAX, use the appropriate value specified under recommended operating conditions.
‡ All typical values are at V_{CC} = 5 V, T_A = 25°C
§Not more than one output should be shorted at a time and the duration of the short-circuit should not exceed one second.

switching characteristics, V_{CC} = 5 V, T_A = 25°C, (see note 3)

PARAMETER	FROM (INPUT)	TO (OUTPUT)	TEST CONDITIONS		'LS597			'LS598			UNIT
					MIN	TYP	MAX	MIN	TYP	MAX	
f_{max}	SRCK	Q	R_L = 667 Ω,	C_L = 45 pF	20	35		20	35		MHz
f_{max}	SRCK	Q_H'	R_L = 1 kΩ,	C_L = 30 pF	20	35					MHz
t_{PLH}	SRCK↑	Q_H'	R_L = 1 kΩ,	C_L = 30 pF		15	23		11	17	ns
t_{PHL}	SPCK↑	Q_H'				20	30		15	23	ns
t_{PLH}	$\overline{SRLOAD}$↓	Q_H'				38	57		28	42	ns
t_{PHL}	$\overline{SRLOAD}$↓	Q_H'				29	44		20	30	ns
t_{PHL}	$\overline{SRCLR}$↓	Q_H'				24	36		18	27	ns
t_{PLH}	RCK↑	Q_H'	R_L = 1 kΩ,	C_L = 30 pF		41	60		32	48	ns
t_{PHL}	RCK↑	Q_H'	SRLOAD = L			32	48		24	36	ns
t_{PLH}	SRCK↑	Q	R_L = 667 Ω,	C_L = 45 pF					12	18	ns
t_{PHL}	SRCK↑	Q							19	28	ns
t_{PLH}	$\overline{SRLOAD}$↓	Q							32	48	ns
t_{PHL}	$\overline{SRLOAD}$↓	Q							27	40	ns
t_{PHL}	$\overline{SRCLR}$↓	Q							25	38	ns
t_{PZH}	G↓	Q							26	31	ns
t_{PZL}	G↓	Q							29	43	ns
t_{PHZ}	G↑	Q	R_L = 667 Ω,	C_L = 5 pF					25	38	ns
t_{PLZ}	G↑	Q							20	30	ns

NOTE 3: Load circuits and voltage waveforms are shown in Section 1.

typical operating sequences

'LS597

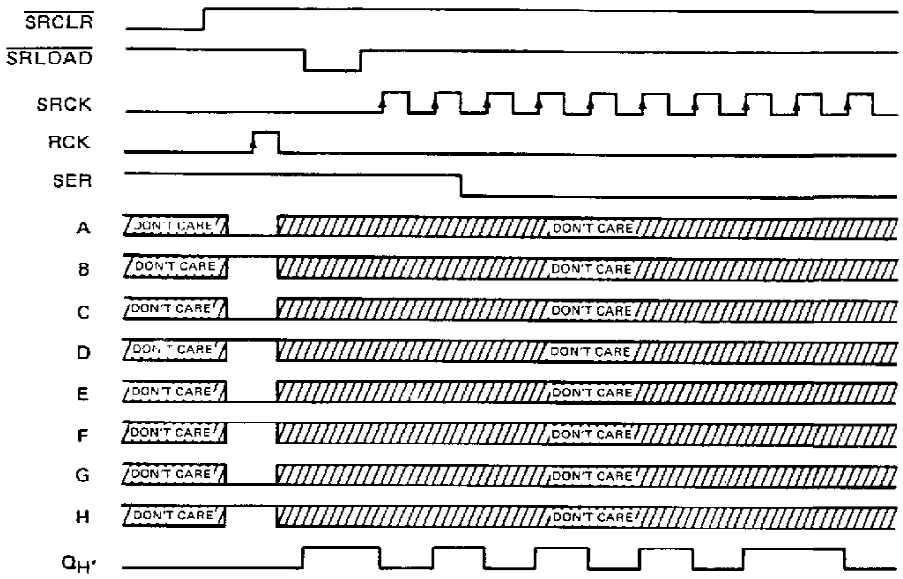

'LS598

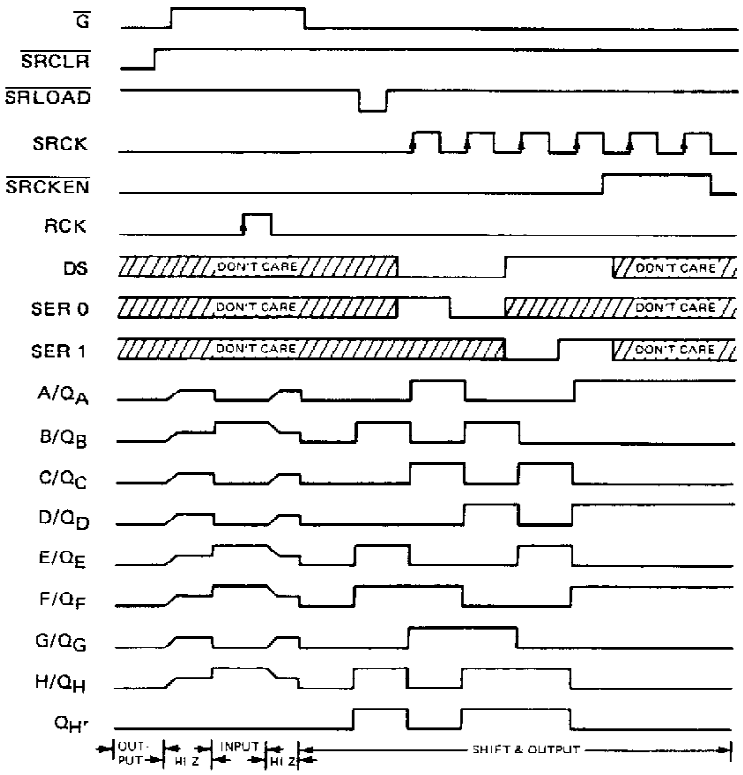

PACKAGING INFORMATION

Orderable Device	Status (1)	Package Type	Package Drawing	Pins	Package Qty	Eco Plan (2)	Lead/Ball Finish	MSL Peak Temp (3)
5962-89444012A	ACTIVE	LCCC	FK	20	1	TBD	POST-PLATE	N / A for Pkg Type
5962-8944401EA	ACTIVE	CDIP	J	16	1	TBD	A42 SNPB	N / A for Pkg Type
5962-8944401EA	ACTIVE	CDIP	J	16	1	TBD	A42 SNPB	N / A for Pkg Type
5962-8944401FA	ACTIVE	CFP	W	16	1	TBD	A42	N / A for Pkg Type
5962-8944401FA	ACTIVE	CFP	W	16	1	TBD	A42	N / A for Pkg Type
5962-89756012A	OBSOLETE	LCCC	FK	20		TBD	Call TI	Call TI
5962-89756012A	OBSOLETE	LCCC	FK	20		TBD	Call TI	Call TI
5962-8975601SA	OBSOLETE	CFP	W	20		TBD	Call TI	Call TI
5962-8975601SA	OBSOLETE	CFP	W	20		TBD	Call TI	Call TI
SN54LS597J	ACTIVE	CDIP	J	16	1	TBD	A42 SNPB	N / A for Pkg Type
SN54LS597J	ACTIVE	CDIP	J	16	1	TBD	A42 SNPB	N / A for Pkg Type
SN54LS598J	OBSOLETE	CDIP	J	20		TBD	Call TI	Call TI
SN54LS598J	OBSOLETE	CDIP	J	20		TBD	Call TI	Call TI
SN74LS597D	ACTIVE	SOIC	D	16	40	Green (RoHS & no Sb/Br)	CU NIPDAU	Level-1-260C-UNLIM
SN74LS597D	ACTIVE	SOIC	D	16	40	Green (RoHS & no Sb/Br)	CU NIPDAU	Level-1-260C-UNLIM
SN74LS597DE4	ACTIVE	SOIC	D	16	40	Green (RoHS & no Sb/Br)	CU NIPDAU	Level-1-260C-UNLIM
SN74LS597DE4	ACTIVE	SOIC	D	16	40	Green (RoHS & no Sb/Br)	CU NIPDAU	Level-1-260C-UNLIM
SN74LS597DG4	ACTIVE	SOIC	D	16	40	Green (RoHS & no Sb/Br)	CU NIPDAU	Level-1-260C-UNLIM
SN74LS597DG4	ACTIVE	SOIC	D	16	40	Green (RoHS & no Sb/Br)	CU NIPDAU	Level-1-260C-UNLIM
SN74LS597DR	ACTIVE	SOIC	D	16	2500	Green (RoHS & no Sb/Br)	CU NIPDAU	Level-1-260C-UNLIM
SN74LS597DR	ACTIVE	SOIC	D	16	2500	Green (RoHS & no Sb/Br)	CU NIPDAU	Level-1-260C-UNLIM
SN74LS597DRE4	ACTIVE	SOIC	D	16	2500	Green (RoHS & no Sb/Br)	CU NIPDAU	Level-1-260C-UNLIM
SN74LS597DRE4	ACTIVE	SOIC	D	16	2500	Green (RoHS & no Sb/Br)	CU NIPDAU	Level-1-260C-UNLIM
SN74LS597DRG4	ACTIVE	SOIC	D	16	2500	Green (RoHS & no Sb/Br)	CU NIPDAU	Level-1-260C-UNLIM
SN74LS597DRG4	ACTIVE	SOIC	D	16	2500	Green (RoHS & no Sb/Br)	CU NIPDAU	Level-1-260C-UNLIM
SN74LS597N	ACTIVE	PDIP	N	16	25	Pb-Free (RoHS)	CU NIPDAU	N / A for Pkg Type
SN74LS597N	ACTIVE	PDIP	N	16	25	Pb-Free (RoHS)	CU NIPDAU	N / A for Pkg Type
SN74LS597NE4	ACTIVE	PDIP	N	16	25	Pb-Free (RoHS)	CU NIPDAU	N / A for Pkg Type
SN74LS597NE4	ACTIVE	PDIP	N	16	25	Pb-Free (RoHS)	CU NIPDAU	N / A for Pkg Type
SN74LS597NSR	ACTIVE	SO	NS	16	2000	Green (RoHS & no Sb/Br)	CU NIPDAU	Level-1-260C-UNLIM

Orderable Device	Status (1)	Package Type	Package Drawing	Pins	Package Qty	Eco Plan (2)	Lead/Ball Finish	MSL Peak Temp (3)
SN74LS597NSR	ACTIVE	SO	NS	16	2000	Green (RoHS & no Sb/Br)	CU NIPDAU	Level-1-260C-UNLIM
SN74LS597NSRE4	ACTIVE	SO	NS	16	2000	Green (RoHS & no Sb/Br)	CU NIPDAU	Level-1-260C-UNLIM
SN74LS597NSRE4	ACTIVE	SO	NS	16	2000	Green (RoHS & no Sb/Br)	CU NIPDAU	Level-1-260C-UNLIM
SN74LS597NSRG4	ACTIVE	SO	NS	16	2000	Green (RoHS & no Sb/Br)	CU NIPDAU	Level-1-260C-UNLIM
SN74LS597NSRG4	ACTIVE	SO	NS	16	2000	Green (RoHS & no Sb/Br)	CU NIPDAU	Level-1-260C-UNLIM
SN74LS598DW	ACTIVE	SOIC	DW	20	25	Green (RoHS & no Sb/Br)	CU NIPDAU	Level-1-260C-UNLIM
SN74LS598DW	ACTIVE	SOIC	DW	20	25	Green (RoHS & no Sb/Br)	CU NIPDAU	Level-1-260C-UNLIM
SN74LS598DWE4	ACTIVE	SOIC	DW	20	25	Green (RoHS & no Sb/Br)	CU NIPDAU	Level-1-260C-UNLIM
SN74LS598DWE4	ACTIVE	SOIC	DW	20	25	Green (RoHS & no Sb/Br)	CU NIPDAU	Level-1-260C-UNLIM
SN74LS598DWG4	ACTIVE	SOIC	DW	20	25	Green (RoHS & no Sb/Br)	CU NIPDAU	Level-1-260C-UNLIM
SN74LS598DWG4	ACTIVE	SOIC	DW	20	25	Green (RoHS & no Sb/Br)	CU NIPDAU	Level-1-260C-UNLIM
SN74LS598N	ACTIVE	PDIP	N	20	20	Pb-Free (RoHS)	CU NIPDAU	N / A for Pkg Type
SN74LS598N	ACTIVE	PDIP	N	20	20	Pb-Free (RoHS)	CU NIPDAU	N / A for Pkg Type
SN74LS598NE4	ACTIVE	PDIP	N	20	20	Pb-Free (RoHS)	CU NIPDAU	N / A for Pkg Type
SN74LS598NE4	ACTIVE	PDIP	N	20	20	Pb-Free (RoHS)	CU NIPDAU	N / A for Pkg Type
SNJ54LS597FK	ACTIVE	LCCC	FK	20	1	TBD	POST-PLATE	N / A for Pkg Type
SNJ54LS597FK	ACTIVE	LCCC	FK	20	1	TBD	POST-PLATE	N / A for Pkg Type
SNJ54LS597J	ACTIVE	CDIP	J	16	1	TBD	A42 SNPB	N / A for Pkg Type
SNJ54LS597J	ACTIVE	CDIP	J	16	1	TBD	A42 SNPB	N / A for Pkg Type
SNJ54LS597W	ACTIVE	CFP	W	16	1	TBD	A42	N / A for Pkg Type
SNJ54LS597W	ACTIVE	CFP	W	16	1	TBD	A42	N / A for Pkg Type
SNJ54LS598FK	OBSOLETE	LCCC	FK	20		TBD	Call TI	Call TI
SNJ54LS598FK	OBSOLETE	LCCC	FK	20		TBD	Call TI	Call TI
SNJ54LS598J	OBSOLETE	CDIP	J	20		TBD	Call TI	Call TI
SNJ54LS598J	OBSOLETE	CDIP	J	20		TBD	Call TI	Call TI
SNJ54LS598W	OBSOLETE			20		TBD	Call TI	Call TI
SNJ54LS598W	OBSOLETE			20		TBD	Call TI	Call TI

(1) The marketing status values are defined as follows:
ACTIVE: Product device recommended for new designs.
LIFEBUY: TI has announced that the device will be discontinued, and a lifetime-buy period is in effect.
NRND: Not recommended for new designs. Device is in production to support existing customers, but TI does not recommend using this part in a new design.
PREVIEW: Device has been announced but is not in production. Samples may or may not be available.
OBSOLETE: TI has discontinued the production of the device.

(2) Eco Plan - The planned eco-friendly classification: Pb-Free (RoHS), Pb-Free (RoHS Exempt), or Green (RoHS & no Sb/Br) - please check http://www.ti.com/productcontent for the latest availability information and additional product content details.
TBD: The Pb-Free/Green conversion plan has not been defined.
Pb-Free (RoHS): TI's terms "Lead-Free" or "Pb-Free" mean semiconductor products that are compatible with the current RoHS requirements for all 6 substances, including the requirement that lead not exceed 0.1% by weight in homogeneous materials. Where designed to be soldered at high temperatures, TI Pb-Free products are suitable for use in specified lead-free processes.
Pb-Free (RoHS Exempt): This component has a RoHS exemption for either 1) lead-based flip-chip solder bumps used between the die and package, or 2) lead-based die adhesive used between the die and leadframe. The component is otherwise considered Pb-Free (RoHS compatible) as defined above.
Green (RoHS & no Sb/Br): TI defines "Green" to mean Pb-Free (RoHS compatible), and free of Bromine (Br) and Antimony (Sb) based flame retardants (Br or Sb do not exceed 0.1% by weight in homogeneous material)

(3) MSL, Peak Temp. -- The Moisture Sensitivity Level rating according to the JEDEC industry standard classifications, and peak solder temperature.

Important Information and Disclaimer: The information provided on this page represents TI's knowledge and belief as of the date that it is provided. TI bases its knowledge and belief on information provided by third parties, and makes no representation or warranty as to the accuracy of such information. Efforts are underway to better integrate information from third parties. TI has taken and continues to take reasonable steps to provide representative and accurate information but may not have conducted destructive testing or chemical analysis on incoming materials and chemicals. TI and TI suppliers consider certain information to be proprietary, and thus CAS numbers and other limited information may not be available for release.

In no event shall TI's liability arising out of such information exceed the total purchase price of the TI part(s) at issue in this document sold by TI to Customer on an annual basis.

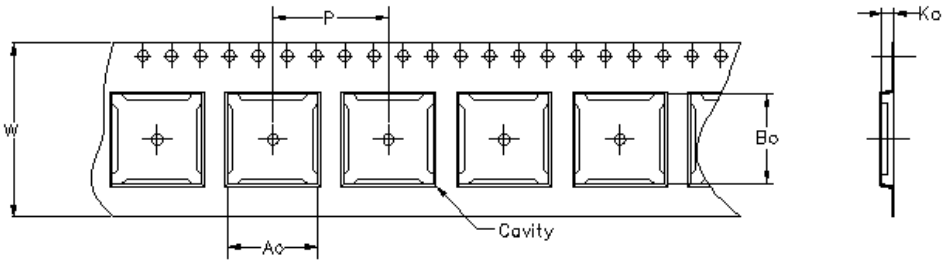

Carrier tape design is defined largely by the component lentgh, width, and thickness.

Ao = Dimension designed to accommodate the component width.
Bo = Dimension designed to accommodate the component length.
Ko = Dimension designed to accommodate the component thickness.
W = Overall width of the carrier tape.
P = Pitch between successive cavity centers.

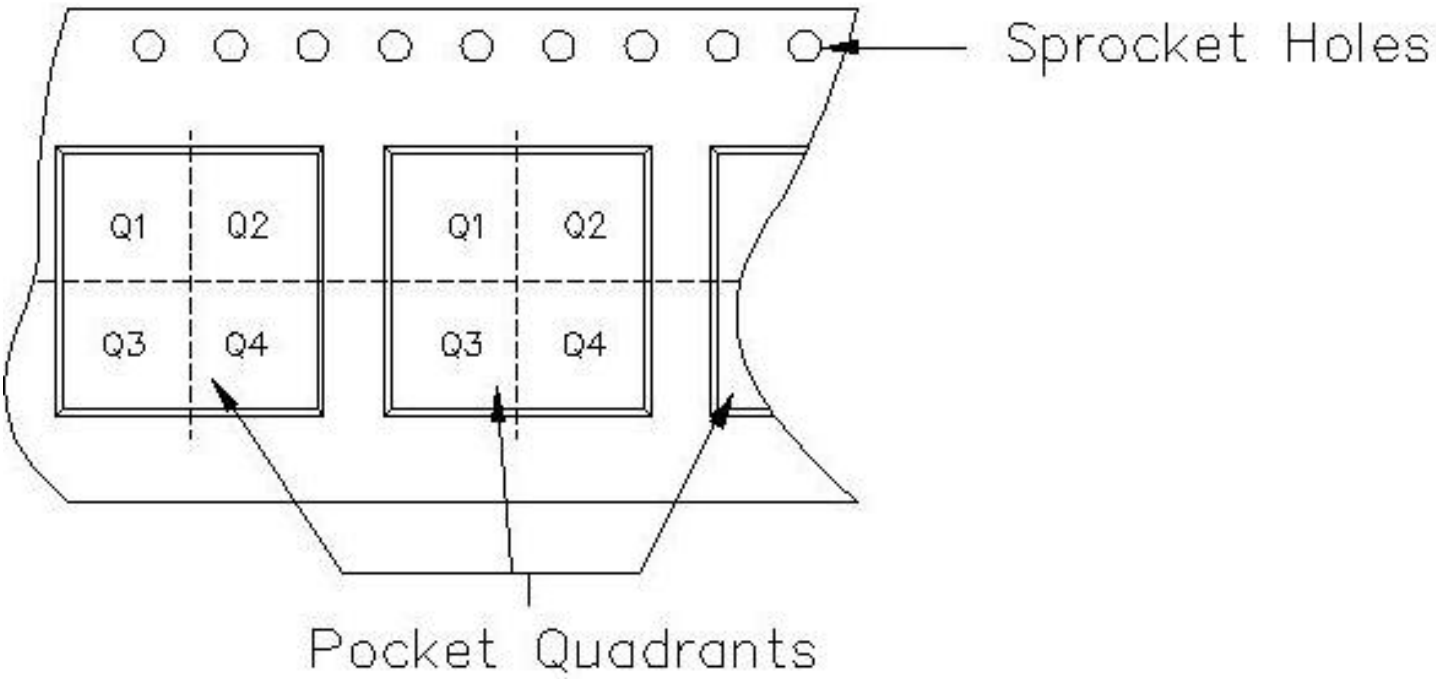

TAPE AND REEL INFORMATION

Device	Package	Pins	Site	Reel Diameter (mm)	Reel Width (mm)	A0 (mm)	B0 (mm)	K0 (mm)	P1 (mm)	W (mm)	Pin1 Quadrant
SN74LS597DR	D	16	FMX	330	16	6.5	10.3	2.1	8	16	Q1
SN74LS597NSR	NS	16	MLA	330	16	8.2	10.5	2.5	12	16	Q1

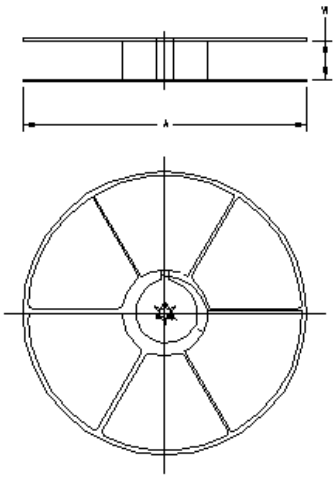

TAPE AND REEL BOX INFORMATION

Device	Package	Pins	Site	Length (mm)	Width (mm)	Height (mm)
SN74LS597DR	D	16	FMX	342.9	336.6	28.58
SN74LS597NSR	NS	16	MLA	342.9	336.6	28.58

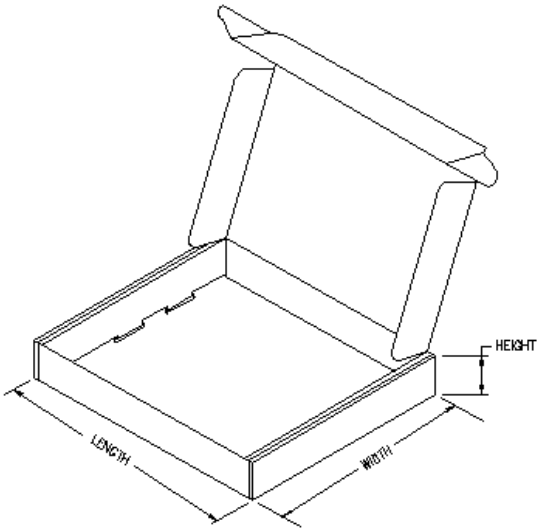

J (R–GDIP–T**) CERAMIC DUAL IN–LINE PACKAGE

14 LEADS SHOWN

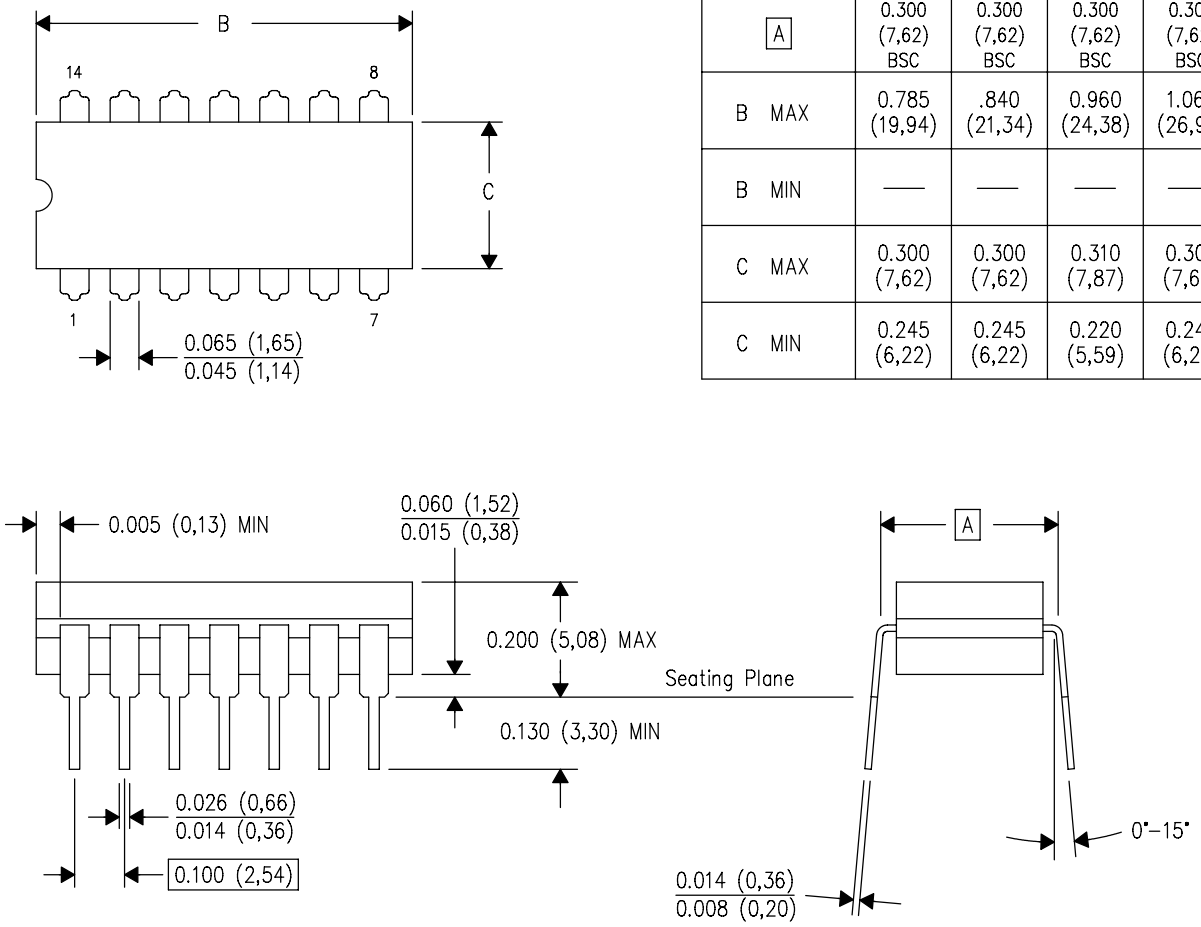

DIM \ PINS **	14	16	18	20
A	0.300 (7,62) BSC	0.300 (7,62) BSC	0.300 (7,62) BSC	0.300 (7,62) BSC
B MAX	0.785 (19,94)	.840 (21,34)	0.960 (24,38)	1.060 (26,92)
B MIN	—	—	—	—
C MAX	0.300 (7,62)	0.300 (7,62)	0.310 (7,87)	0.300 (7,62)
C MIN	0.245 (6,22)	0.245 (6,22)	0.220 (5,59)	0.245 (6,22)

4040083/F 03/03

NOTES:
- A. All linear dimensions are in inches (millimeters).
- B. This drawing is subject to change without notice.
- C. This package is hermetically sealed with a ceramic lid using glass frit.
- D. Index point is provided on cap for terminal identification only on press ceramic glass frit seal only.
- E. Falls within MIL STD 1835 GDIP1–T14, GDIP1–T16, GDIP1–T18 and GDIP1–T20.

W (R–GDFP–F16) CERAMIC DUAL FLATPACK

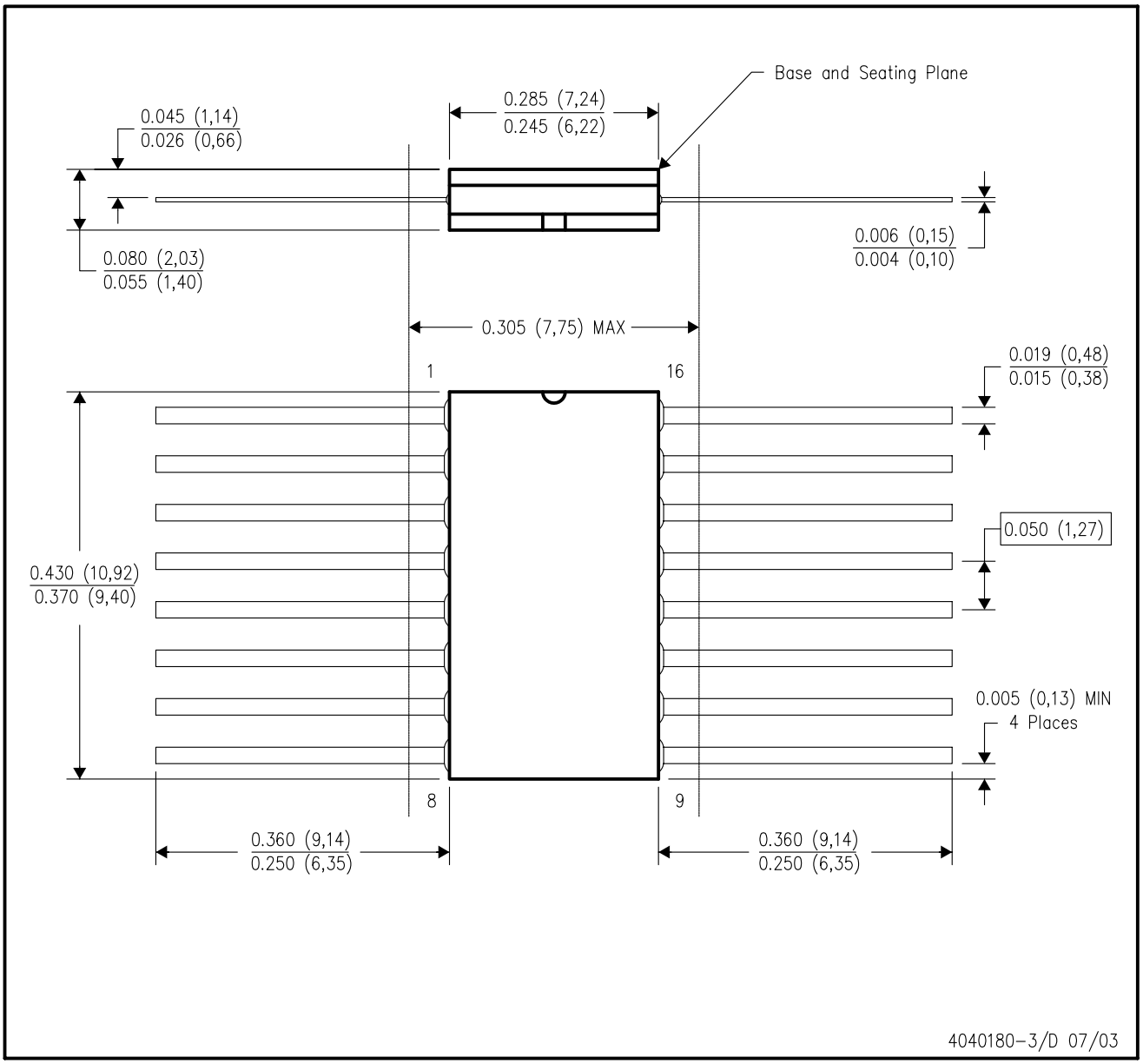

NOTES:
A. All linear dimensions are in inches (millimeters).
B. This drawing is subject to change without notice.
C. This package can be hermetically sealed with a ceramic lid using glass frit.
D. Index point is provided on cap for terminal identification only.
E. Falls within MIL STD 1835 GDFP1–F16 and JEDEC MO–092AC

W (R–GDFP–F20) CERAMIC DUAL FLATPACK

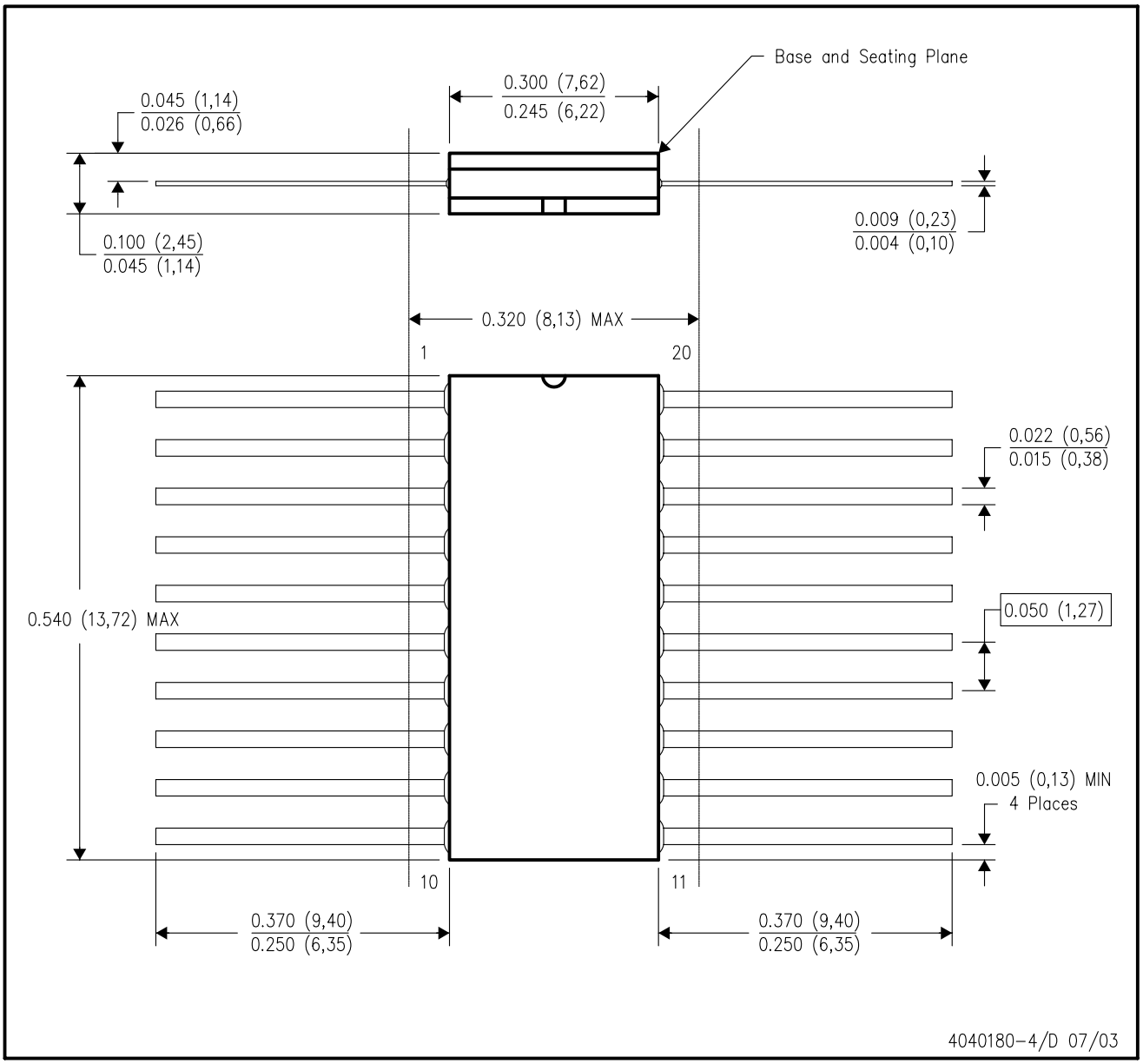

NOTES:
A. All linear dimensions are in inches (millimeters).
B. This drawing is subject to change without notice.
C. This package can be hermetically sealed with a ceramic lid using glass frit.
D. Index point is provided on cap for terminal identification only.
E. Falls within Mil–Std 1835 GDFP2–F20

PACKAGING INFORMATION

Orderable Device	Status (1)	Package Type	Package Drawing	Pins	Package Qty	Eco Plan (2)	Lead/Ball Finish	MSL Peak Temp (3)
5962-89444012A	ACTIVE	LCCC	FK	20	1	TBD	POST-PLATE	N / A for Pkg Type
5962-8944401EA	ACTIVE	CDIP	J	16	1	TBD	A42 SNPB	N / A for Pkg Type
5962-8944401EA	ACTIVE	CDIP	J	16	1	TBD	A42 SNPB	N / A for Pkg Type
5962-8944401FA	ACTIVE	CFP	W	16	1	TBD	A42	N / A for Pkg Type
5962-8944401FA	ACTIVE	CFP	W	16	1	TBD	A42	N / A for Pkg Type
5962-89756012A	OBSOLETE	LCCC	FK	20		TBD	Call TI	Call TI
5962-89756012A	OBSOLETE	LCCC	FK	20		TBD	Call TI	Call TI
5962-8975601SA	OBSOLETE	CFP	W	20		TBD	Call TI	Call TI
5962-8975601SA	OBSOLETE	CFP	W	20		TBD	Call TI	Call TI
SN54LS597J	ACTIVE	CDIP	J	16	1	TBD	A42 SNPB	N / A for Pkg Type
SN54LS597J	ACTIVE	CDIP	J	16	1	TBD	A42 SNPB	N / A for Pkg Type
SN54LS598J	OBSOLETE	CDIP	J	20		TBD	Call TI	Call TI
SN54LS598J	OBSOLETE	CDIP	J	20		TBD	Call TI	Call TI
SN74LS597D	ACTIVE	SOIC	D	16	40	Green (RoHS & no Sb/Br)	CU NIPDAU	Level-1-260C-UNLIM
SN74LS597D	ACTIVE	SOIC	D	16	40	Green (RoHS & no Sb/Br)	CU NIPDAU	Level-1-260C-UNLIM
SN74LS597DE4	ACTIVE	SOIC	D	16	40	Green (RoHS & no Sb/Br)	CU NIPDAU	Level-1-260C-UNLIM
SN74LS597DE4	ACTIVE	SOIC	D	16	40	Green (RoHS & no Sb/Br)	CU NIPDAU	Level-1-260C-UNLIM
SN74LS597DG4	ACTIVE	SOIC	D	16	40	Green (RoHS & no Sb/Br)	CU NIPDAU	Level-1-260C-UNLIM
SN74LS597DG4	ACTIVE	SOIC	D	16	40	Green (RoHS & no Sb/Br)	CU NIPDAU	Level-1-260C-UNLIM
SN74LS597DR	ACTIVE	SOIC	D	16	2500	Green (RoHS & no Sb/Br)	CU NIPDAU	Level-1-260C-UNLIM
SN74LS597DR	ACTIVE	SOIC	D	16	2500	Green (RoHS & no Sb/Br)	CU NIPDAU	Level-1-260C-UNLIM
SN74LS597DRE4	ACTIVE	SOIC	D	16	2500	Green (RoHS & no Sb/Br)	CU NIPDAU	Level-1-260C-UNLIM
SN74LS597DRE4	ACTIVE	SOIC	D	16	2500	Green (RoHS & no Sb/Br)	CU NIPDAU	Level-1-260C-UNLIM
SN74LS597DRG4	ACTIVE	SOIC	D	16	2500	Green (RoHS & no Sb/Br)	CU NIPDAU	Level-1-260C-UNLIM
SN74LS597DRG4	ACTIVE	SOIC	D	16	2500	Green (RoHS & no Sb/Br)	CU NIPDAU	Level-1-260C-UNLIM
SN74LS597N	ACTIVE	PDIP	N	16	25	Pb-Free (RoHS)	CU NIPDAU	N / A for Pkg Type
SN74LS597N	ACTIVE	PDIP	N	16	25	Pb-Free (RoHS)	CU NIPDAU	N / A for Pkg Type
SN74LS597NE4	ACTIVE	PDIP	N	16	25	Pb-Free (RoHS)	CU NIPDAU	N / A for Pkg Type
SN74LS597NE4	ACTIVE	PDIP	N	16	25	Pb-Free (RoHS)	CU NIPDAU	N / A for Pkg Type
SN74LS597NSR	ACTIVE	SO	NS	16	2000	Green (RoHS & no Sb/Br)	CU NIPDAU	Level-1-260C-UNLIM

Orderable Device	Status (1)	Package Type	Package Drawing	Pins	Package Qty	Eco Plan (2)	Lead/Ball Finish	MSL Peak Temp (3)
SN74LS597NSR	ACTIVE	SO	NS	16	2000	Green (RoHS & no Sb/Br)	CU NIPDAU	Level-1-260C-UNLIM
SN74LS597NSRE4	ACTIVE	SO	NS	16	2000	Green (RoHS & no Sb/Br)	CU NIPDAU	Level-1-260C-UNLIM
SN74LS597NSRE4	ACTIVE	SO	NS	16	2000	Green (RoHS & no Sb/Br)	CU NIPDAU	Level-1-260C-UNLIM
SN74LS597NSRG4	ACTIVE	SO	NS	16	2000	Green (RoHS & no Sb/Br)	CU NIPDAU	Level-1-260C-UNLIM
SN74LS597NSRG4	ACTIVE	SO	NS	16	2000	Green (RoHS & no Sb/Br)	CU NIPDAU	Level-1-260C-UNLIM
SN74LS598DW	ACTIVE	SOIC	DW	20	25	Green (RoHS & no Sb/Br)	CU NIPDAU	Level-1-260C-UNLIM
SN74LS598DW	ACTIVE	SOIC	DW	20	25	Green (RoHS & no Sb/Br)	CU NIPDAU	Level-1-260C-UNLIM
SN74LS598DWE4	ACTIVE	SOIC	DW	20	25	Green (RoHS & no Sb/Br)	CU NIPDAU	Level-1-260C-UNLIM
SN74LS598DWE4	ACTIVE	SOIC	DW	20	25	Green (RoHS & no Sb/Br)	CU NIPDAU	Level-1-260C-UNLIM
SN74LS598DWG4	ACTIVE	SOIC	DW	20	25	Green (RoHS & no Sb/Br)	CU NIPDAU	Level-1-260C-UNLIM
SN74LS598DWG4	ACTIVE	SOIC	DW	20	25	Green (RoHS & no Sb/Br)	CU NIPDAU	Level-1-260C-UNLIM
SN74LS598N	ACTIVE	PDIP	N	20	20	Pb-Free (RoHS)	CU NIPDAU	N / A for Pkg Type
SN74LS598N	ACTIVE	PDIP	N	20	20	Pb-Free (RoHS)	CU NIPDAU	N / A for Pkg Type
SN74LS598NE4	ACTIVE	PDIP	N	20	20	Pb-Free (RoHS)	CU NIPDAU	N / A for Pkg Type
SN74LS598NE4	ACTIVE	PDIP	N	20	20	Pb-Free (RoHS)	CU NIPDAU	N / A for Pkg Type
SNJ54LS597FK	ACTIVE	LCCC	FK	20	1	TBD	POST-PLATE	N / A for Pkg Type
SNJ54LS597FK	ACTIVE	LCCC	FK	20	1	TBD	POST-PLATE	N / A for Pkg Type
SNJ54LS597J	ACTIVE	CDIP	J	16	1	TBD	A42 SNPB	N / A for Pkg Type
SNJ54LS597J	ACTIVE	CDIP	J	16	1	TBD	A42 SNPB	N / A for Pkg Type
SNJ54LS597W	ACTIVE	CFP	W	16	1	TBD	A42	N / A for Pkg Type
SNJ54LS597W	ACTIVE	CFP	W	16	1	TBD	A42	N / A for Pkg Type
SNJ54LS598FK	OBSOLETE	LCCC	FK	20		TBD	Call TI	Call TI
SNJ54LS598FK	OBSOLETE	LCCC	FK	20		TBD	Call TI	Call TI
SNJ54LS598J	OBSOLETE	CDIP	J	20		TBD	Call TI	Call TI
SNJ54LS598J	OBSOLETE	CDIP	J	20		TBD	Call TI	Call TI
SNJ54LS598W	OBSOLETE			20		TBD	Call TI	Call TI
SNJ54LS598W	OBSOLETE			20		TBD	Call TI	Call TI

(1) The marketing status values are defined as follows:
ACTIVE: Product device recommended for new designs.
LIFEBUY: TI has announced that the device will be discontinued, and a lifetime-buy period is in effect.
NRND: Not recommended for new designs. Device is in production to support existing customers, but TI does not recommend using this part in a new design.
PREVIEW: Device has been announced but is not in production. Samples may or may not be available.
OBSOLETE: TI has discontinued the production of the device.

(2) Eco Plan - The planned eco-friendly classification: Pb-Free (RoHS), Pb-Free (RoHS Exempt), or Green (RoHS & no Sb/Br) - please check http://www.ti.com/productcontent for the latest availability information and additional product content details.
TBD: The Pb-Free/Green conversion plan has not been defined.
Pb-Free (RoHS): TI's terms "Lead-Free" or "Pb-Free" mean semiconductor products that are compatible with the current RoHS requirements for all 6 substances, including the requirement that lead not exceed 0.1% by weight in homogeneous materials. Where designed to be soldered at high temperatures, TI Pb-Free products are suitable for use in specified lead-free processes.
Pb-Free (RoHS Exempt): This component has a RoHS exemption for either 1) lead-based flip-chip solder bumps used between the die and package, or 2) lead-based die adhesive used between the die and leadframe. The component is otherwise considered Pb-Free (RoHS compatible) as defined above.
Green (RoHS & no Sb/Br): TI defines "Green" to mean Pb-Free (RoHS compatible), and free of Bromine (Br) and Antimony (Sb) based flame retardants (Br or Sb do not exceed 0.1% by weight in homogeneous material)

(3) MSL, Peak Temp. -- The Moisture Sensitivity Level rating according to the JEDEC industry standard classifications, and peak solder temperature.

Important Information and Disclaimer: The information provided on this page represents TI's knowledge and belief as of the date that it is provided. TI bases its knowledge and belief on information provided by third parties, and makes no representation or warranty as to the accuracy of such information. Efforts are underway to better integrate information from third parties. TI has taken and continues to take reasonable steps to provide representative and accurate information but may not have conducted destructive testing or chemical analysis on incoming materials and chemicals. TI and TI suppliers consider certain information to be proprietary, and thus CAS numbers and other limited information may not be available for release.

In no event shall TI's liability arising out of such information exceed the total purchase price of the TI part(s) at issue in this document sold by TI to Customer on an annual basis.

TAPE AND REEL BOX INFORMATION

REEL DIMENSIONS

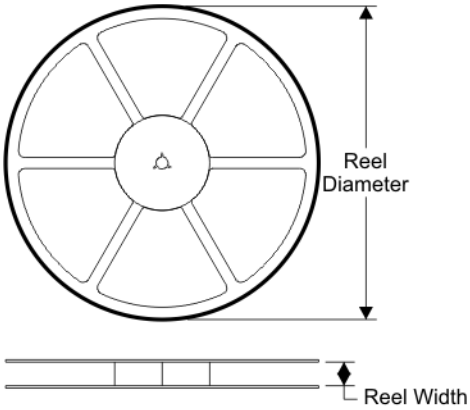

TAPE DIMENSIONS

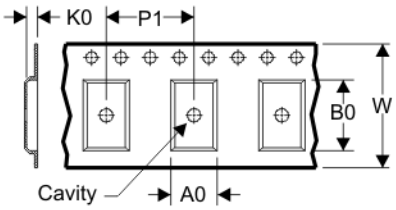

A0	Dimension designed to accommodate the component width
B0	Dimension designed to accommodate the component length
K0	Dimension designed to accommodate the component thickness
W	Overall width of the carrier tape
P1	Pitch between successive cavity centers

QUADRANT ASSIGNMENTS FOR PIN 1 ORIENTATION IN TAPE

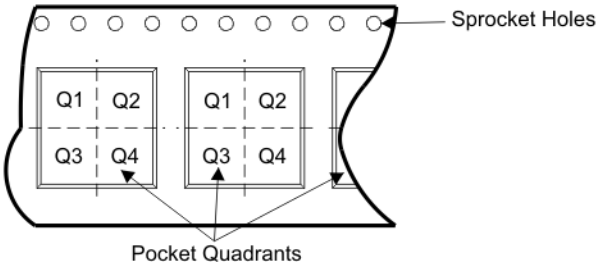

Device	Package	Pins	Site	Reel Diameter (mm)	Reel Width (mm)	A0 (mm)	B0 (mm)	K0 (mm)	P1 (mm)	W (mm)	Pin1 Quadrant
SN74LS597DR	D	16	SITE 27	330	16	6.5	10.3	2.1	8	16	Q1
SN74LS597NSR	NS	16	SITE 41	330	16	8.2	10.5	2.5	12	16	Q1

TAPE AND REEL BOX DIMENSIONS

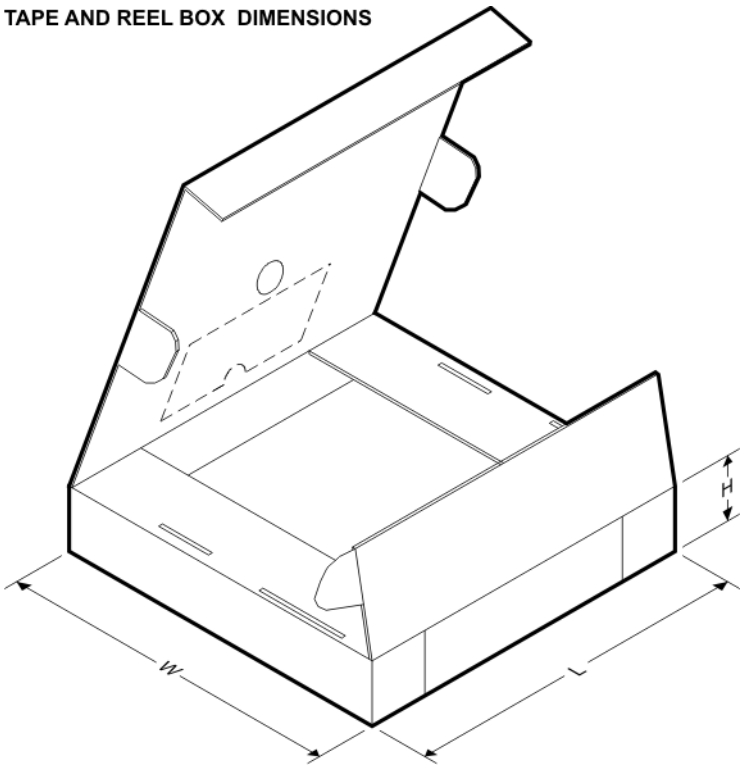

Device	Package	Pins	Site	Length (mm)	Width (mm)	Height (mm)
SN74LS597DR	D	16	SITE 27	342.9	336.6	28.58
SN74LS597NSR	NS	16	SITE 41	346.0	346.0	33.0

J (R–GDIP–T**) CERAMIC DUAL IN–LINE PACKAGE

14 LEADS SHOWN

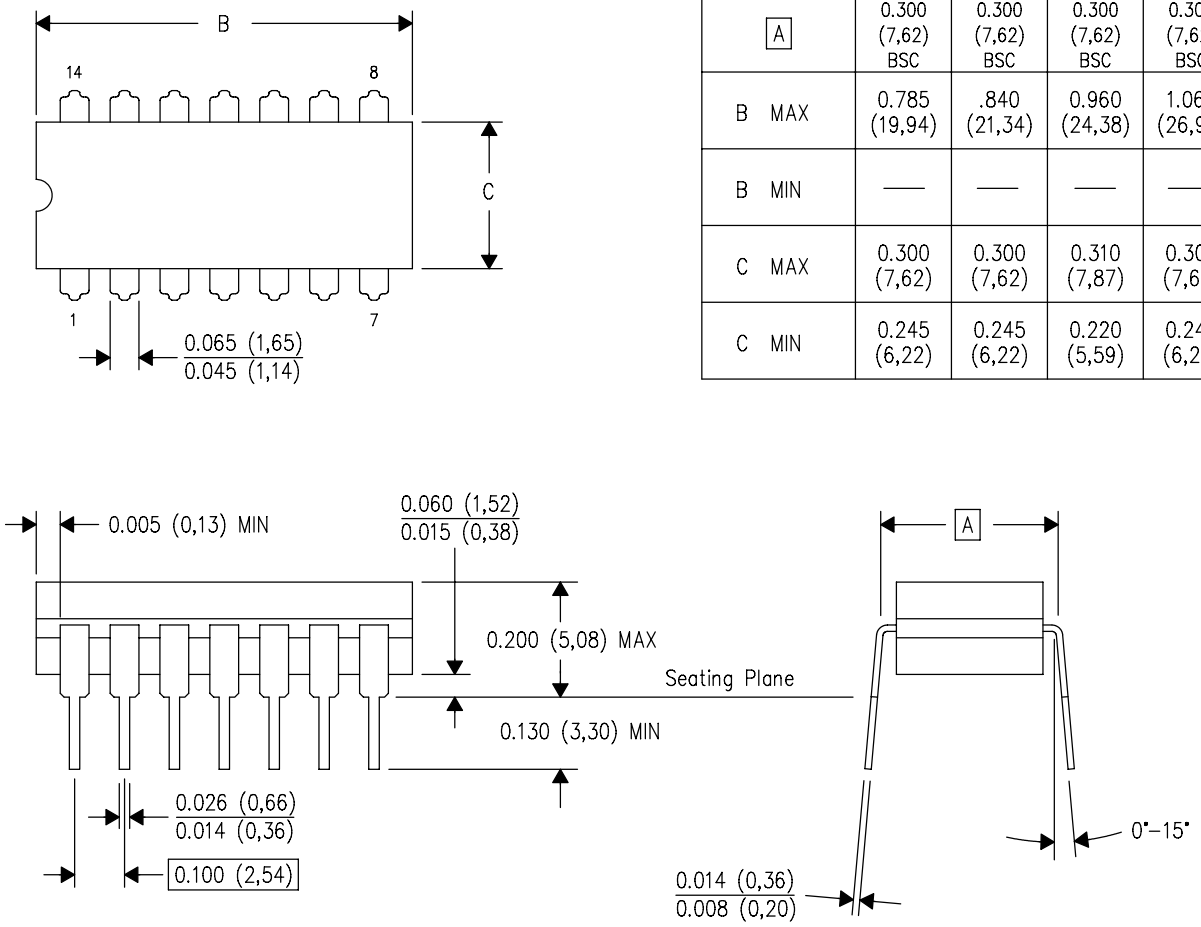

DIM \ PINS **	14	16	18	20
A	0.300 (7,62) BSC	0.300 (7,62) BSC	0.300 (7,62) BSC	0.300 (7,62) BSC
B MAX	0.785 (19,94)	.840 (21,34)	0.960 (24,38)	1.060 (26,92)
B MIN	—	—	—	—
C MAX	0.300 (7,62)	0.300 (7,62)	0.310 (7,87)	0.300 (7,62)
C MIN	0.245 (6,22)	0.245 (6,22)	0.220 (5,59)	0.245 (6,22)

4040083/F 03/03

NOTES:
- A. All linear dimensions are in inches (millimeters).
- B. This drawing is subject to change without notice.
- C. This package is hermetically sealed with a ceramic lid using glass frit.
- D. Index point is provided on cap for terminal identification only on press ceramic glass frit seal only.
- E. Falls within MIL STD 1835 GDIP1–T14, GDIP1–T16, GDIP1–T18 and GDIP1–T20.

W (R–GDFP–F16) CERAMIC DUAL FLATPACK

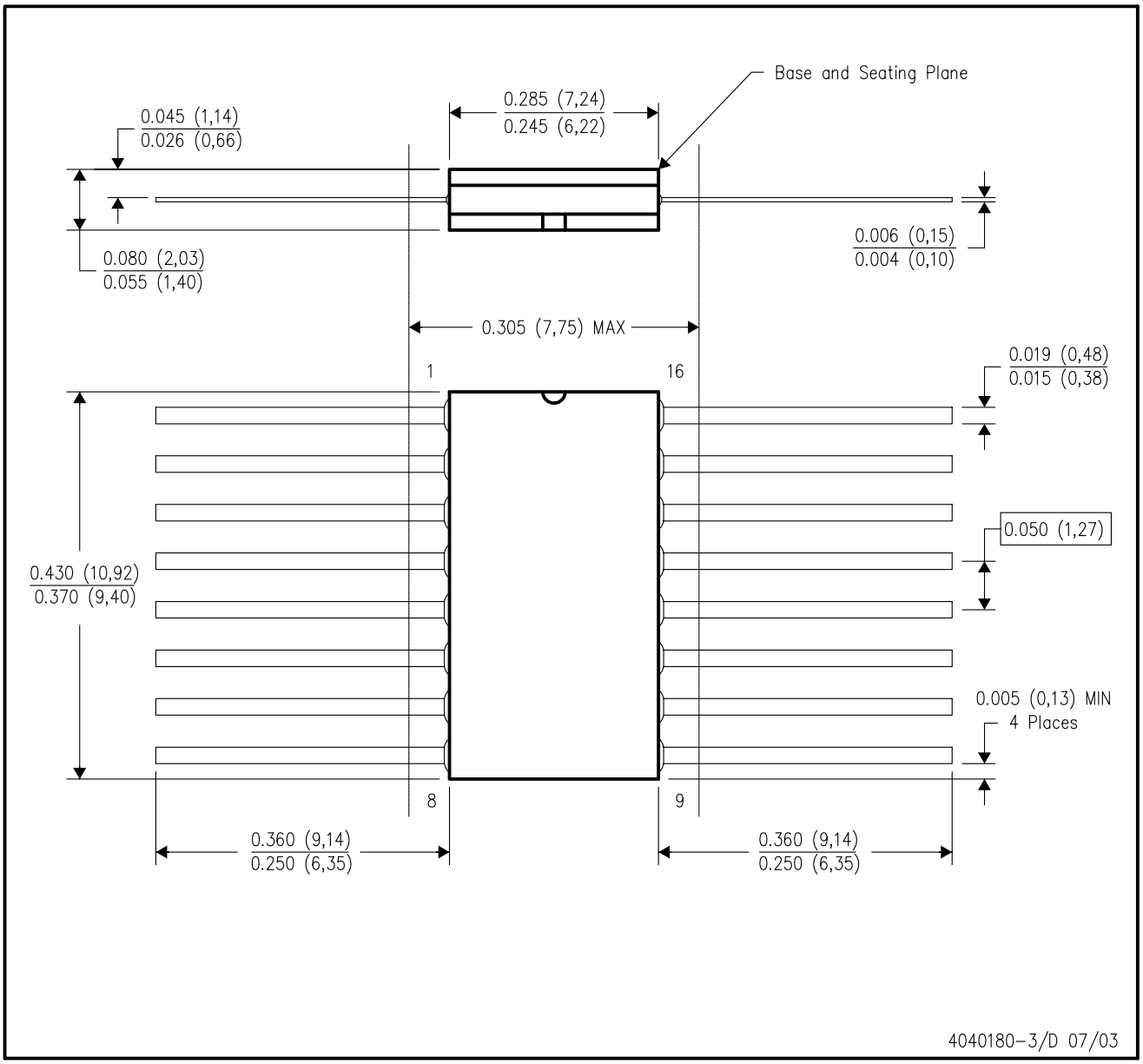

NOTES:
A. All linear dimensions are in inches (millimeters).
B. This drawing is subject to change without notice.
C. This package can be hermetically sealed with a ceramic lid using glass frit.
D. Index point is provided on cap for terminal identification only.
E. Falls within MIL STD 1835 GDFP1–F16 and JEDEC MO–092AC

W (R–GDFP–F20) CERAMIC DUAL FLATPACK

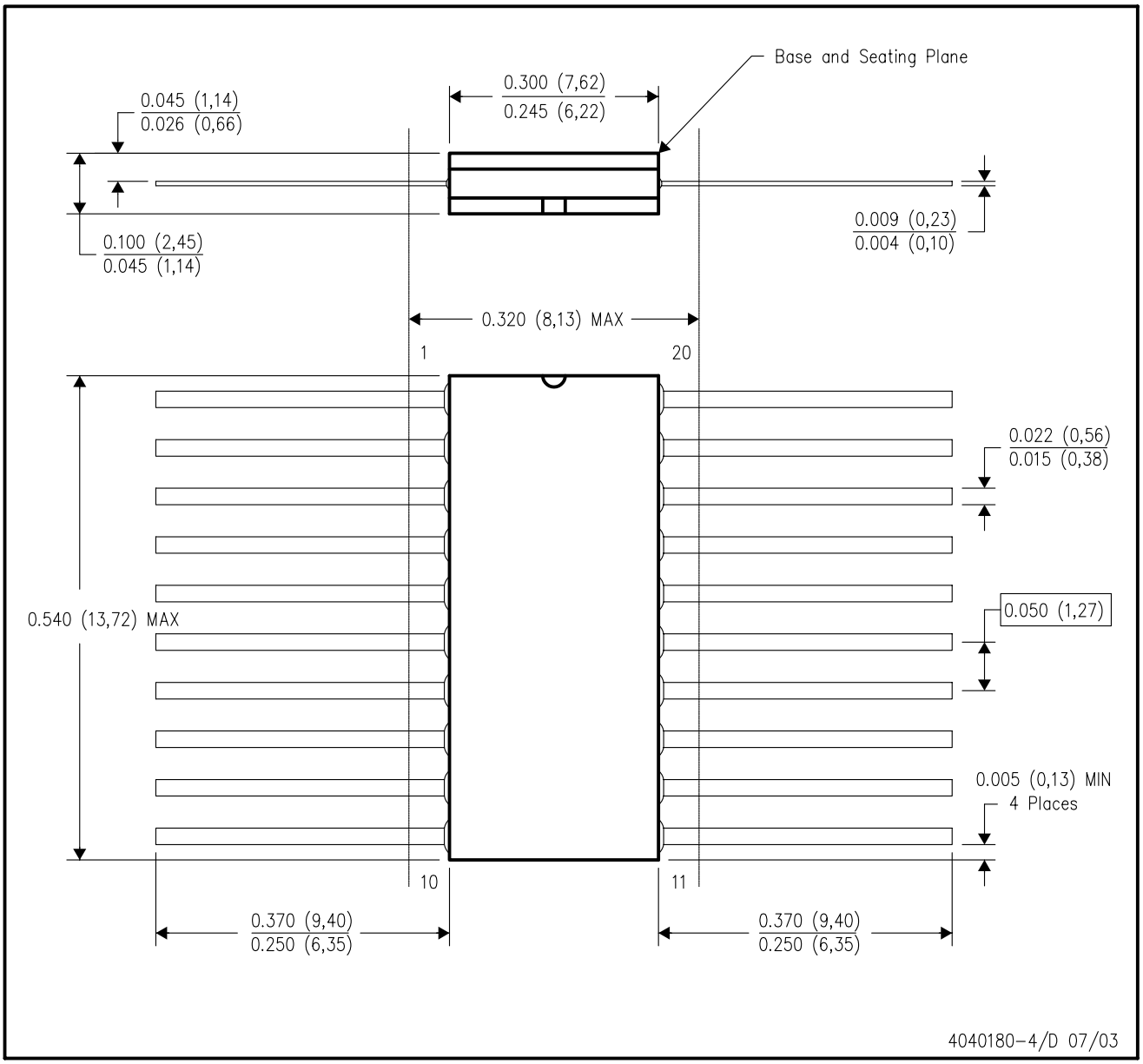

NOTES:
A. All linear dimensions are in inches (millimeters).
B. This drawing is subject to change without notice.
C. This package can be hermetically sealed with a ceramic lid using glass frit.
D. Index point is provided on cap for terminal identification only.
E. Falls within Mil–Std 1835 GDFP2–F20

FK (S-CQCC-N**)

LEADLESS CERAMIC CHIP CARRIER

28 TERMINAL SHOWN

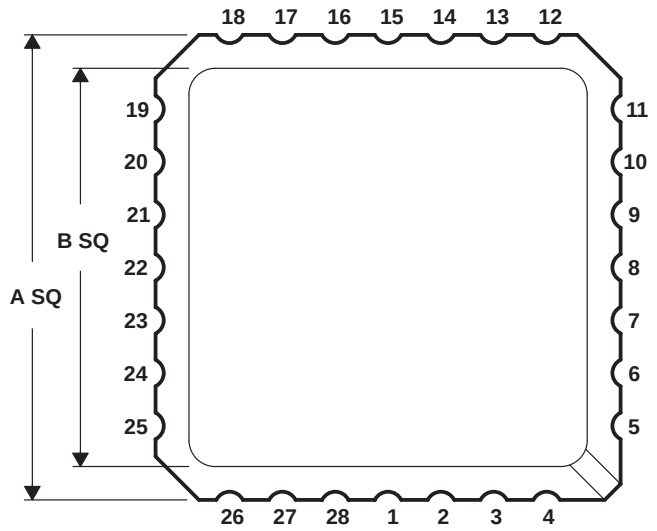

NO. OF TERMINALS **	A		B	
	MIN	MAX	MIN	MAX
20	0.342 (8,69)	0.358 (9,09)	0.307 (7,80)	0.358 (9,09)
28	0.442 (11,23)	0.458 (11,63)	0.406 (10,31)	0.458 (11,63)
44	0.640 (16,26)	0.660 (16,76)	0.495 (12,58)	0.560 (14,22)
52	0.739 (18,78)	0.761 (19,32)	0.495 (12,58)	0.560 (14,22)
68	0.938 (23,83)	0.962 (24,43)	0.850 (21,6)	0.858 (21,8)
84	1.141 (28,99)	1.165 (29,59)	1.047 (26,6)	1.063 (27,0)

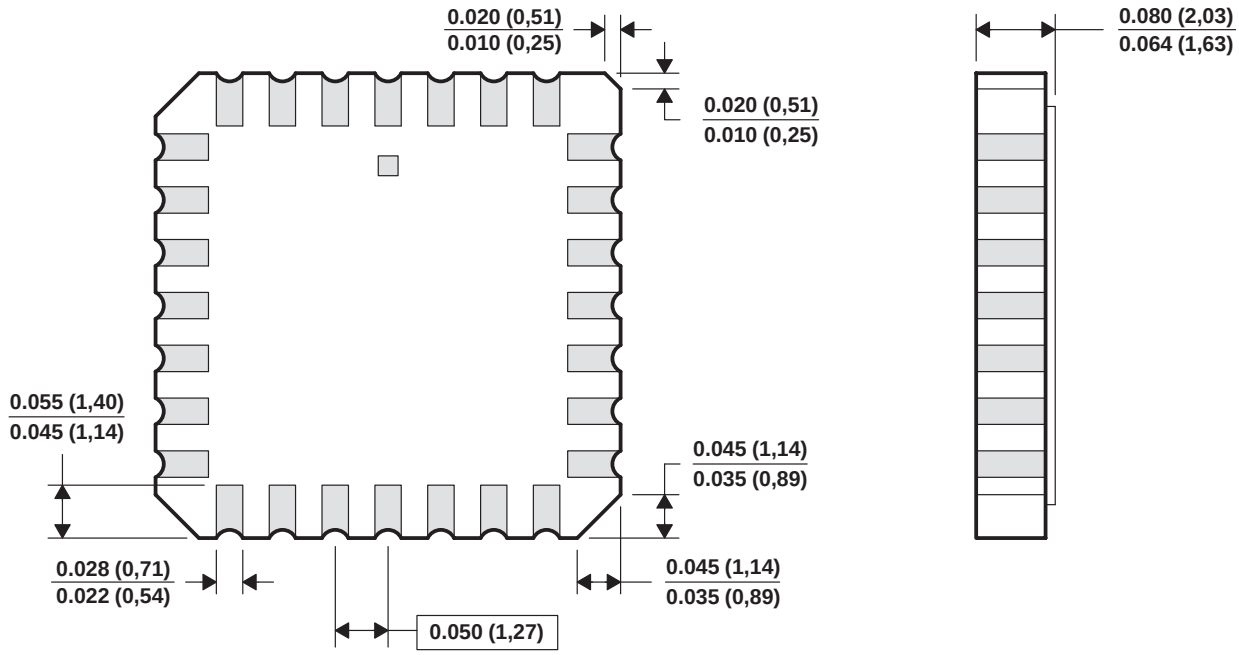

4040140/D 10/96

NOTES:
A. All linear dimensions are in inches (millimeters).
B. This drawing is subject to change without notice.
C. This package can be hermetically sealed with a metal lid.
D. The terminals are gold plated.
E. Falls within JEDEC MS-004

N (R–PDIP–T**) PLASTIC DUAL–IN–LINE PACKAGE

16 PINS SHOWN

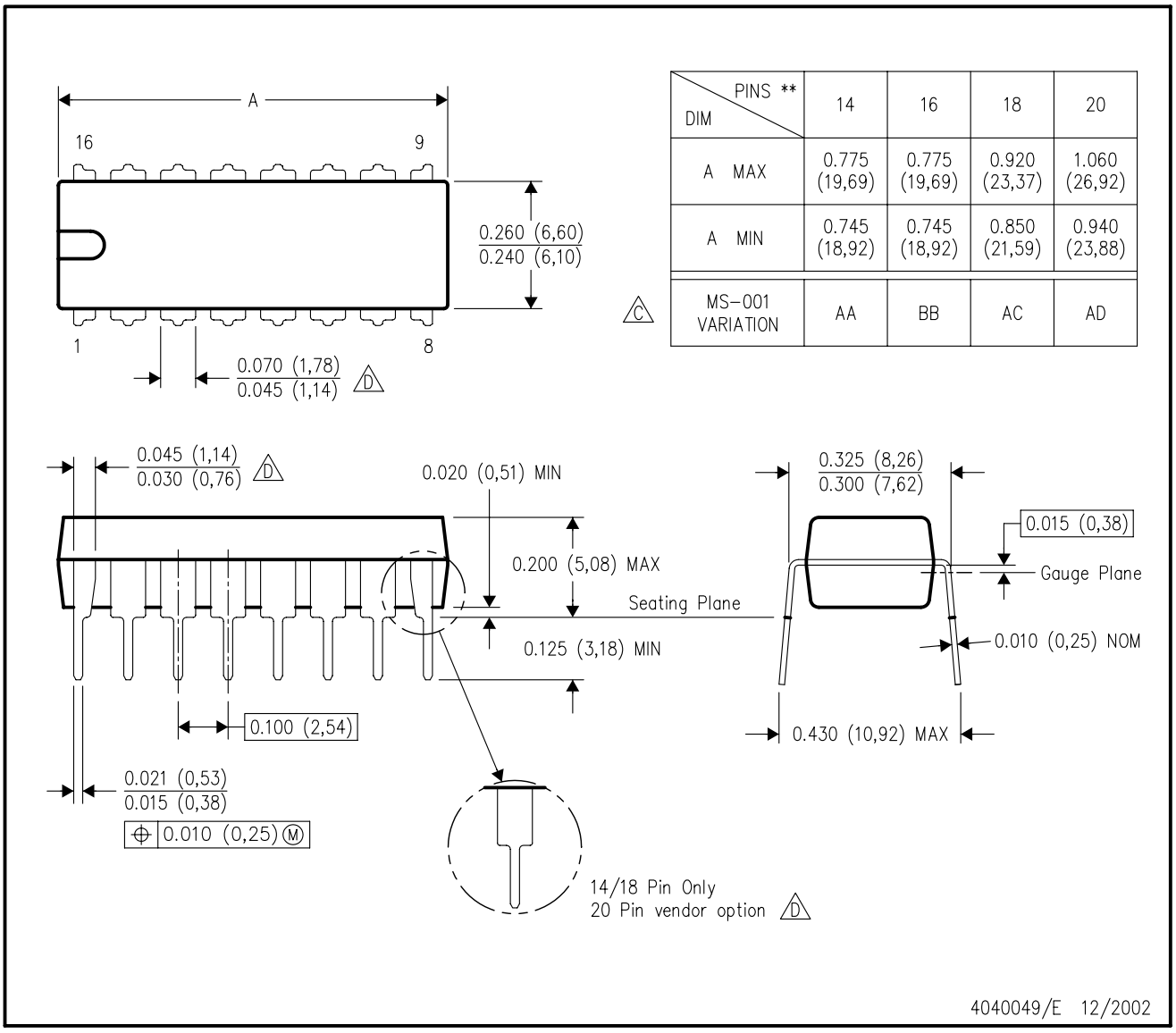

DIM \ PINS **	14	16	18	20
A MAX	0.775 (19,69)	0.775 (19,69)	0.920 (23,37)	1.060 (26,92)
A MIN	0.745 (18,92)	0.745 (18,92)	0.850 (21,59)	0.940 (23,88)
MS–001 VARIATION (C)	AA	BB	AC	AD

NOTES:
A. All linear dimensions are in inches (millimeters).
B. This drawing is subject to change without notice.
C. Falls within JEDEC MS–001, except 18 and 20 pin minimum body length (Dim A).
D. The 20 pin end lead shoulder width is a vendor option, either half or full width.

DW (R–PDSO–G20) PLASTIC SMALL–OUTLINE PACKAGE

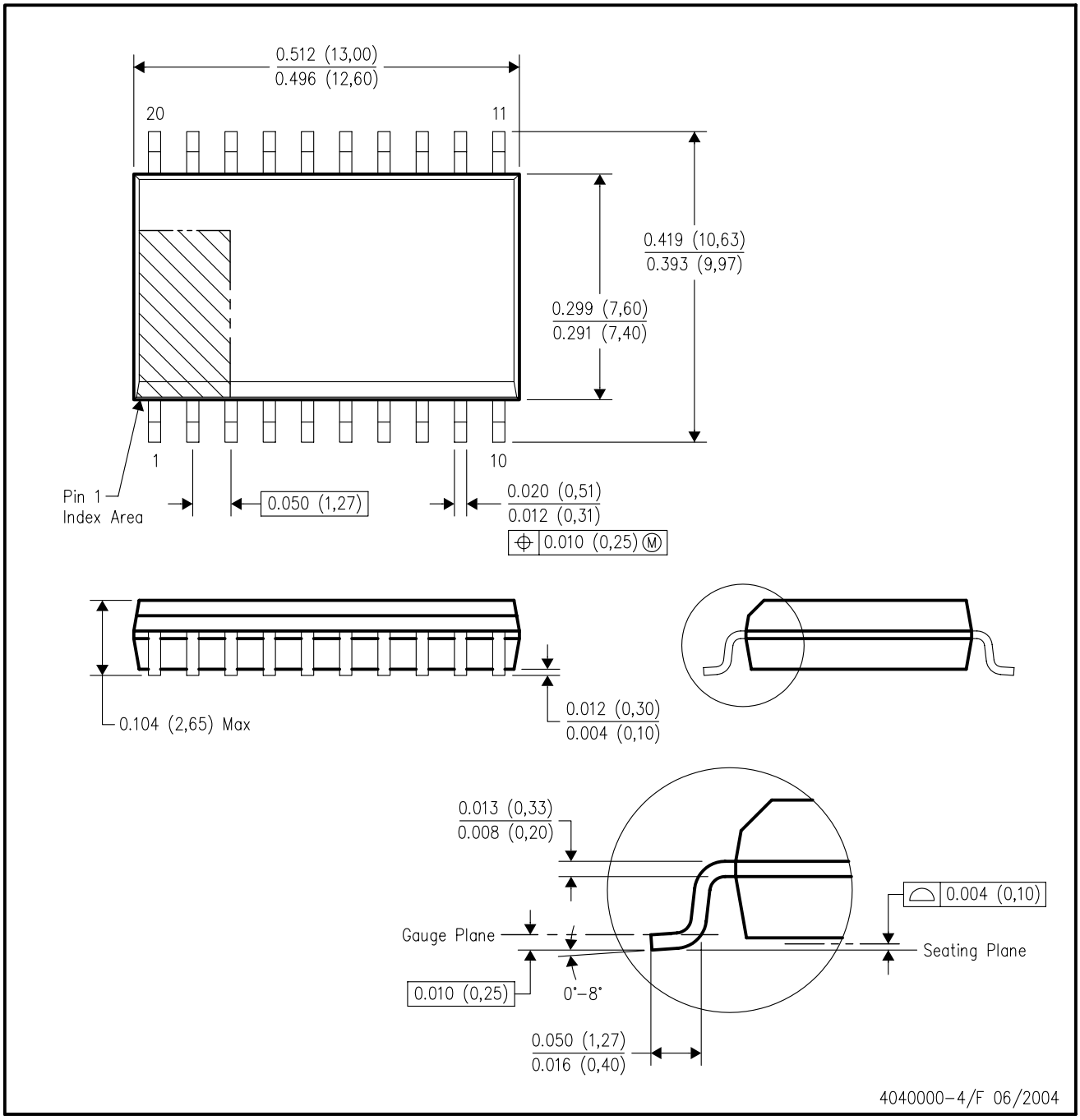

NOTES:
A. All linear dimensions are in inches (millimeters).
B. This drawing is subject to change without notice.
C. Body dimensions do not include mold flash or protrusion not to exceed 0.006 (0,15).
D. Falls within JEDEC MS–013 variation AC.

D (R–PDSO–G16) PLASTIC SMALL–OUTLINE PACKAGE

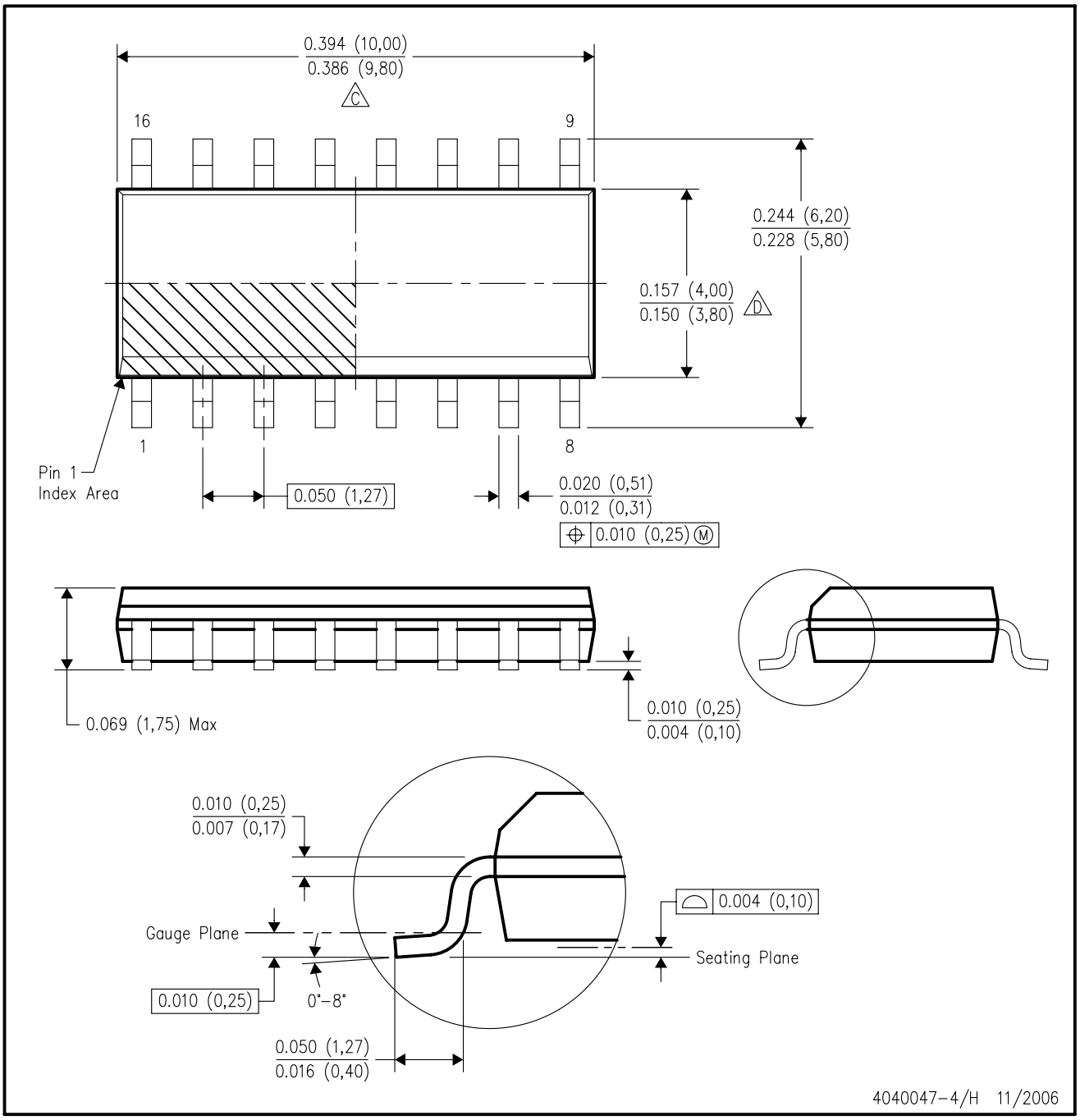

NOTES:
- A. All linear dimensions are in inches (millimeters).
- B. This drawing is subject to change without notice.
- C. Body length does not include mold flash, protrusions, or gate burrs. Mold flash, protrusions, or gate burrs shall not exceed .006 (0,15) per end.
- D. Body width does not include interlead flash. Interlead flash shall not exceed .017 (0,43) per side.
- E. Reference JEDEC MS–012 variation AC.

MECHANICAL DATA

NS (R-PDSO-G)** **PLASTIC SMALL-OUTLINE PACKAGE**

14-PINS SHOWN

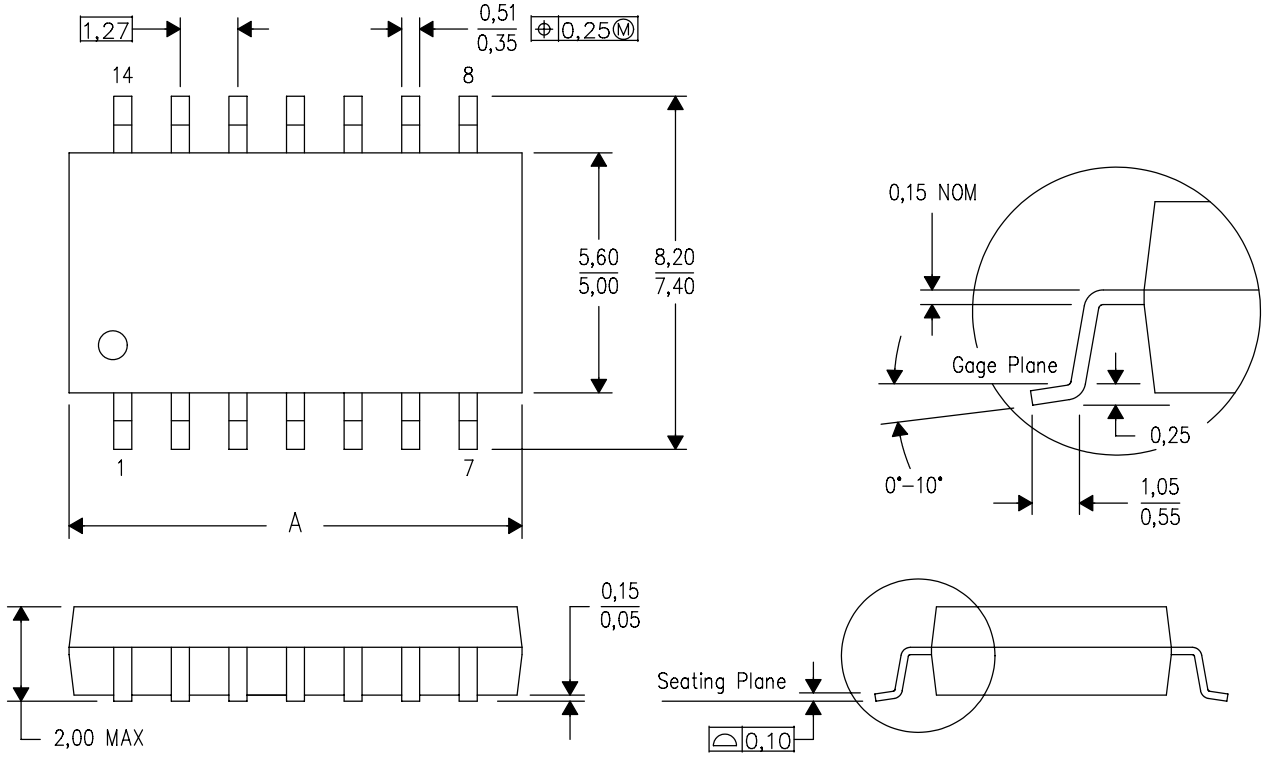

DIM \ PINS **	14	16	20	24
A MAX	10,50	10,50	12,90	15,30
A MIN	9,90	9,90	12,30	14,70

4040062/C 03/03

NOTES:
A. All linear dimensions are in millimeters.
B. This drawing is subject to change without notice.
C. Body dimensions do not include mold flash or protrusion, not to exceed 0,15.

IMPORTANT NOTICE

Texas Instruments Incorporated and its subsidiaries (TI) reserve the right to make corrections, modifications, enhancements, improvements, and other changes to its products and services at any time and to discontinue any product or service without notice. Customers should obtain the latest relevant information before placing orders and should verify that such information is current and complete. All products are sold subject to TI's terms and conditions of sale supplied at the time of order acknowledgment.

TI warrants performance of its hardware products to the specifications applicable at the time of sale in accordance with TI's standard warranty. Testing and other quality control techniques are used to the extent TI deems necessary to support this warranty. Except where mandated by government requirements, testing of all parameters of each product is not necessarily performed.

TI assumes no liability for applications assistance or customer product design. Customers are responsible for their products and applications using TI components. To minimize the risks associated with customer products and applications, customers should provide adequate design and operating safeguards.

TI does not warrant or represent that any license, either express or implied, is granted under any TI patent right, copyright, mask work right, or other TI intellectual property right relating to any combination, machine, or process in which TI products or services are used. Information published by TI regarding third-party products or services does not constitute a license from TI to use such products or services or a warranty or endorsement thereof. Use of such information may require a license from a third party under the patents or other intellectual property of the third party, or a license from TI under the patents or other intellectual property of TI.

Reproduction of TI information in TI data books or data sheets is permissible only if reproduction is without alteration and is accompanied by all associated warranties, conditions, limitations, and notices. Reproduction of this information with alteration is an unfair and deceptive business practice. TI is not responsible or liable for such altered documentation. Information of third parties may be subject to additional restrictions.

Resale of TI products or services with statements different from or beyond the parameters stated by TI for that product or service voids all express and any implied warranties for the associated TI product or service and is an unfair and deceptive business practice. TI is not responsible or liable for any such statements.

TI products are not authorized for use in safety-critical applications (such as life support) where a failure of the TI product would reasonably be expected to cause severe personal injury or death, unless officers of the parties have executed an agreement specifically governing such use. Buyers represent that they have all necessary expertise in the safety and regulatory ramifications of their applications, and acknowledge and agree that they are solely responsible for all legal, regulatory and safety-related requirements concerning their products and any use of TI products in such safety-critical applications, notwithstanding any applications-related information or support that may be provided by TI. Further, Buyers must fully indemnify TI and its representatives against any damages arising out of the use of TI products in such safety-critical applications.

TI products are neither designed nor intended for use in military/aerospace applications or environments unless the TI products are specifically designated by TI as military-grade or "enhanced plastic." Only products designated by TI as military-grade meet military specifications. Buyers acknowledge and agree that any such use of TI products which TI has not designated as military-grade is solely at the Buyer's risk, and that they are solely responsible for compliance with all legal and regulatory requirements in connection with such use.

TI products are neither designed nor intended for use in automotive applications or environments unless the specific TI products are designated by TI as compliant with ISO/TS 16949 requirements. Buyers acknowledge and agree that, if they use any non-designated products in automotive applications, TI will not be responsible for any failure to meet such requirements.

Following are URLs where you can obtain information on other Texas Instruments products and application solutions:

Products		**Applications**	
Amplifiers	amplifier.ti.com	Audio	www.ti.com/audio
Data Converters	dataconverter.ti.com	Automotive	www.ti.com/automotive
DSP	dsp.ti.com	Broadband	www.ti.com/broadband
Interface	interface.ti.com	Digital Control	www.ti.com/digitalcontrol
Logic	logic.ti.com	Military	www.ti.com/military
Power Mgmt	power.ti.com	Optical Networking	www.ti.com/opticalnetwork
Microcontrollers	microcontroller.ti.com	Security	www.ti.com/security
RFID	www.ti-rfid.com	Telephony	www.ti.com/telephony
Low Power Wireless	www.ti.com/lpw	Video & Imaging	www.ti.com/video
		Wireless	www.ti.com/wireless

Mailing Address: Texas Instruments, Post Office Box 655303, Dallas, Texas 75265
Copyright © 2007, Texas Instruments Incorporated