RoHS

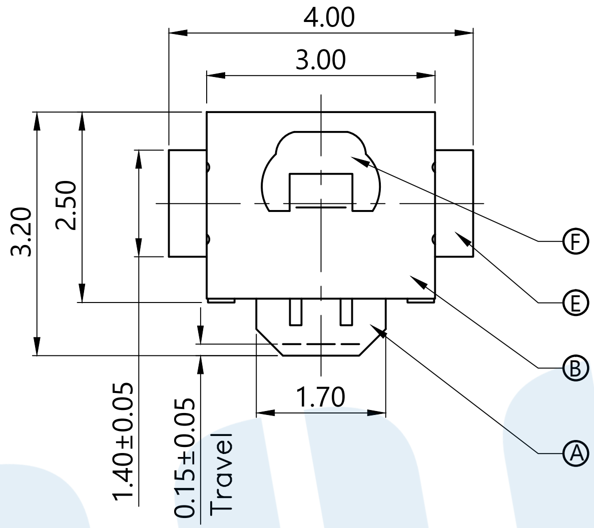

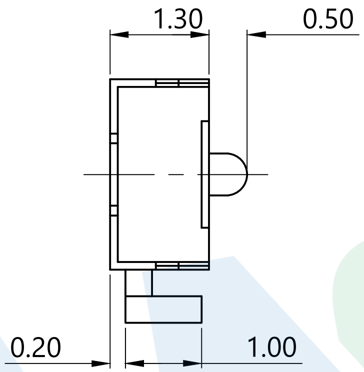

Circuit Diagram

SHRAPNEL	
CODE	MATERIAL/QTY
D2	SUS/1PCS
D4	SUS/2PCS

OPERATING FORCE	
CODE	VIGOR
B3	250±30gf

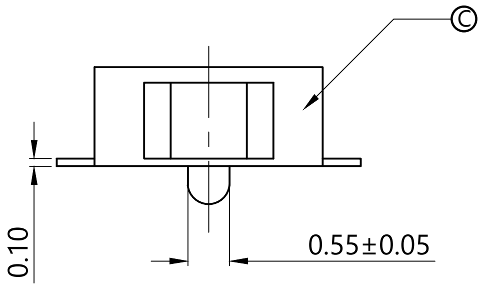

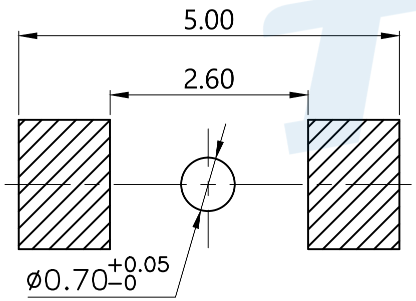

PCB Layout(Pattern side)

NO.	Name	Number	Qty	Materil	Remarks
F	Dust film		1	Polyimide tape	
E	Terminal		4	Phosphor bronze	Silvering
D	Reed		2	SUS	Silvering
C	Base		1	LCP	White
B	Cover		1	SUS	Nickel plated
A	Button		1	Nylon	Black

YUANDI® Yuandi Electronics Co,Ltd

angle	±2°	design		date	name	TACT SWITCHS
10~30	±0.30	Review		date		
5~10	±0.20	Approved		date	name	TS−1063S−B□D□
~ 5	±0.10	Drawing number:				
Tolerance not specified		Proportion	1:1	unit	mm	gape number	A4

modify | Review | Approved