Part Number: 62201-8698

Status: Active

Description: Press-In Tool for 6-Pair by 14-Column Backplane

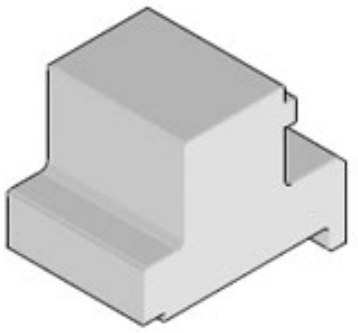

Series

image - Reference only

Documents:
RoHS Certificate of Compliance (PDF)

General

Product Family	Application Tooling
Series	T9999
Comments	See Tooling Specification (PDF) Above
Function	Insertion
Geographic Area	Global
Level of Automation	Manual
More Detailed Tech Information	applicationtooling@molex.com
Product Name	Impact™
Survey	www.molex.com//review/apptool_survey.html
Tool Type	Handtool
UPC	883906554736

Material Info

Reference - Drawing Numbers

Application Tooling Documents	ATS-622018698, TM-622018799

EU RoHS
ELV and RoHS Compliant
REACH SVHC
Not Reviewed
Low-Halogen Status
Not Reviewed

China RoHS

Need more information on product environmental compliance?

Email productcompliance@molex.com
For a multiple part number RoHS Certificate of Compliance, click here

Please visit the Contact Us section for any non-product compliance questions.

Search Parts in this Series
T9999Series

Use With
Impact™ 6 Pair Right Angle Daughtercard
76150