PASTERNACK®
www.pasternack.com

N Female Bulkhead Connector Crimp/Solder Attachment For LMR-200, .640 inch DD Hole

TECHNICAL DATA SHEET PE44767

N Female Bulkhead Connector Crimp/Solder Attachment For LMR-200, .640 inch DD Hole

Configuration

Connector	N Female
Connector Interface Type	LMR-200
Cable Attachment Method (Shield/Contact)	Crimp/Solder
Body Style	Straight
Mount Method	Bulkhead

Electrical Specifications

Impedance, Ohms	50

Mechanical Specifications

Size

Length, in [mm]	1.61 [40.89]
Width/Dia., in [mm]	0.87 [22.10]
Weight, lbs [g]	0.11 [49.9]

Connector

Type	N Female
Contact Material and Plating	Phosphor Bronze, Gold
Body Material and Plating	Brass, Nickel
Dielectric Type	Teflon

Compliance Certifications (visit www.Pasternack.com for current document)

RoHS Compliant	Yes

Plotted and Other Data

Notes:	Values at 25 °C, sea level

N Female Bulkhead Connector Crimp/Solder Attachment For LMR-200, .640 inch DD Hole from Pasternack Enterprises has same day shipment for domestic and International orders. Our RF, microwave and fiber optic products maintain a 99% availability and are part of the broadest selection in the industry.

Click the following link (or enter part number in “SEARCH” on website) to obtain additional part information including price, inventory and certifications: N Female Bulkhead Connector Crimp/Solder Attachment For LMR-200, .640 inch DD Hole PE44767

URL: http://www.pasternack.com/n-female-standard-lmr-200-connector-pe44767-p.aspx

The information contained in this document is accurate to the best of our knowledge and representative of the part described herein. It may be necessary to make modifications to the part and/or the documentation of the part, in order to implement improvements. Pasternack reserves the right to make such changes as required. Unless otherwise stated, all specifications are nominal.

Pasternack Enterprises, Inc. • P.O. Box 16759, Irvine, CA 92623
Phone: (866) 727-8376 or (949) 261-1920 • **Fax:** (949) 261-7451
Sales@Pasternack.com • Techsupport@Pasternack.com

ISO 9001 : 2008 Registered

© 2013 Pasternack Enterprises All Rights Reserved

PE44767 CAD Drawing

N Female Bulkhead Connector Crimp/Solder Attachment For LMR-200, .640 inch DD Hole

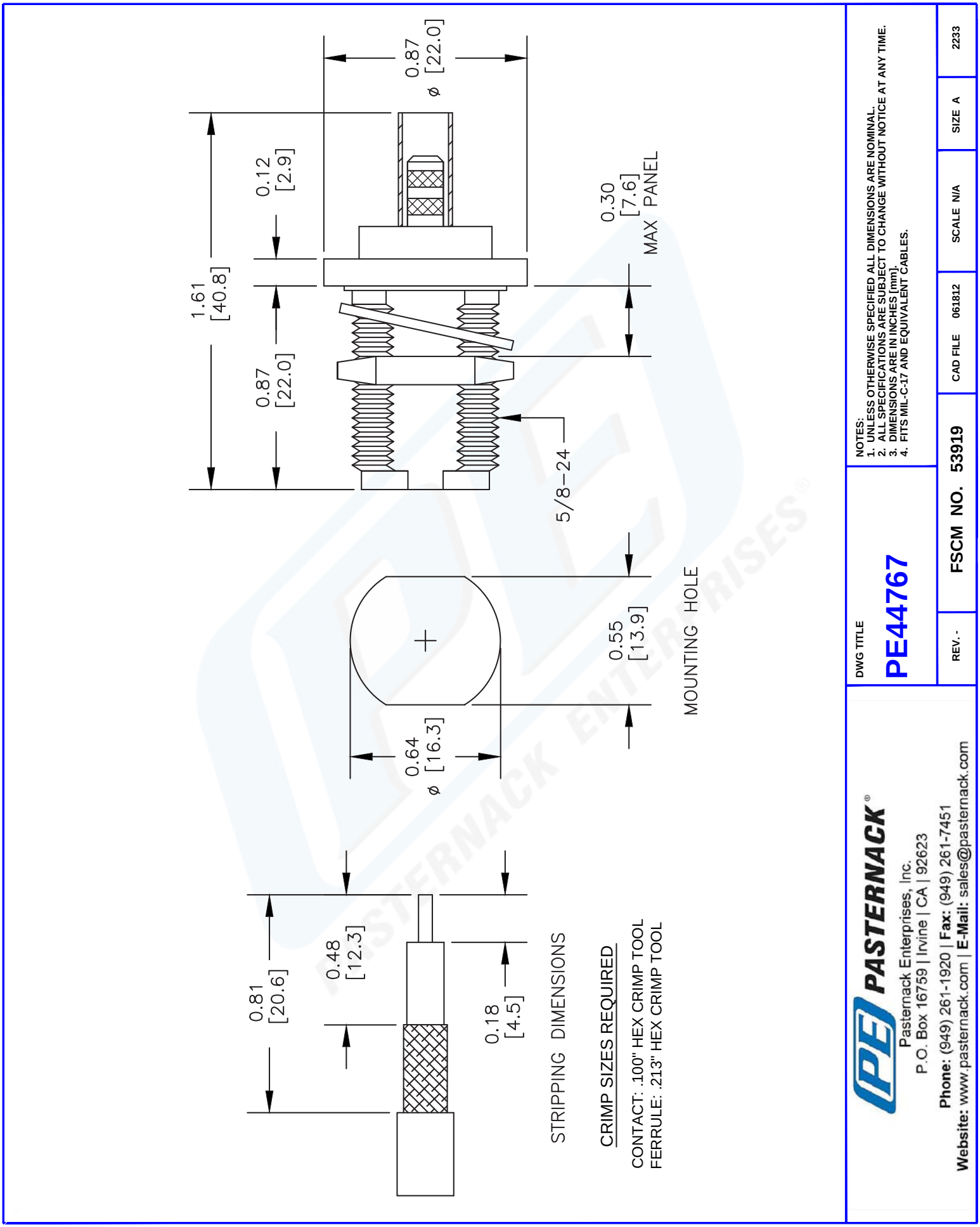

© 2013 Pasternack Enterprises All Rights Reserved