Part Number: 0945120301

Status: Active

Description: Quick Disconnect, High Reliability Terminal (HRT), Female for 2.50-6.00mm² (4-12 AWG) Wire, Accepts 6.30mm (.250") x 0.81mm (.032") Tab

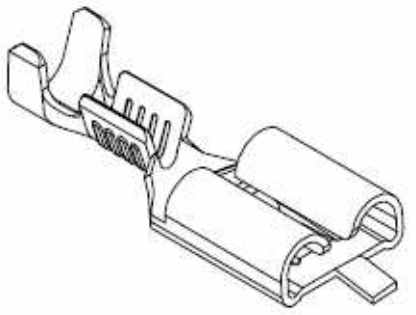

Series

image - Reference only

Documents:
Drawing (PDF)
RoHS Certificate of Compliance (PDF)

General

Product Family	Quick Disconnects
Series	94512
Crimp Quality Equipment	Yes
Product Name	N/A
Type	Quick Disconnect

Physical

Barrel Type	Open
Gender	Female
Glow-Wire Compliant	No
Insulation	None
Lock to Mating Part	None
Material - Metal	Brass
Material - Plating Mating	Tin
Material - Plating Termination	Tin
Orientation	Straight
Packaging Type	Reel
Polarized to Mating Part	Yes
Tab Thickness	0.81mm (.032")
Tab Width	6.35mm (.250")
Temperature Range - Operating	-25°C to +55°C
Termination Interface: Style	Crimp or Compression
Wire Size AWG	10, 12
Wire Size mm²	2.50 - 6.00

Electrical

Voltage - Maximum	250V

Material Info

Reference - Drawing Numbers

Sales Drawing	SD-94512-004

EU RoHS
ELV and RoHS Compliant
REACH SVHC
Contains SVHC: No
Halogen-Free Status
Halogen-Free

China RoHS

Need more information on product environmental compliance?

Email productcompliance@molex.com
For a multiple part number RoHS Certificate of Compliance, click here

Please visit the Contact Us section for any non-product compliance questions.

Search Parts in this Series
94512Series

Use With
94090 Quick Disconnect Housing

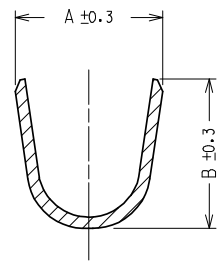

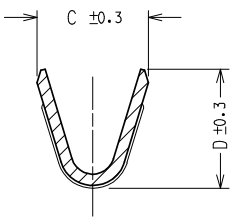

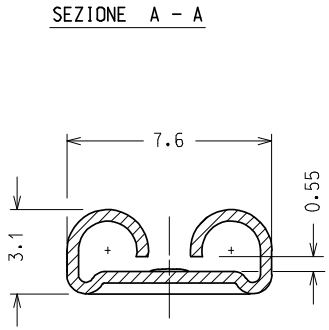

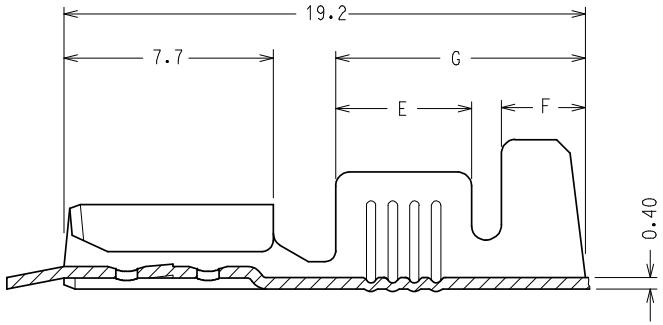

CODICE P/N	FINITURA PLATING	MATERIALE MATERIAL	SEZ. RAME WIRE RANGE (mm^2)	ø ISOLANTE INS. RANGE (mm)	DIMENSIONI / DIMENSION (mm) A	B	C	D	E	F	G	PZ/BOBINA PCS/REEL	S.P.Q.
94512-0000	GREGGIO/ UNPLATED	OTTONE/ BRASS	0.2 ◁—▷0.5	1.2 ◁—▷2.1	3.0	2.9	2.3	2.3	3.1	1.8	6.3	7.000	21.000
94512-0001	STAGNATO/ TIN												
94512-0100	GREGGIO/ UNPLATED	OTTONE/ BRASS	0.5 ◁—▷1.0	2.0 ◁—▷3.3	4.5	4.5	3.0	3.0	4.2	2.4	8.2	7.000	21.000
94512-0101	STAGNATO/ TIN												
94512-0111	NICHELATO/ NICKEL	ACCIAIO/ STEEL											
94512-0130	GREGGIO/ UNPLATED	ALPACCA/ PACKFONG											
94512-0200	GREGGIO/ UNPLATED	OTTONE/ BRASS	1.0 ◁—▷2.5	2.7 ◁—▷4.3	5.5	5.5	4.1	4.3	5.0	3.1	9.1	6.000	18.000
94512-0201	STAGNATO/ TIN												
94512-0211	NICHELATO/ NICKEL	ACCIAIO/ STEEL											
94512-0230	GREGGIO/ UNPLATED	ALPACCA/ PACKFONG											
94512-0301	STAGNATO/ TIN	OTTONE/ BRASS	2.5 ◁—▷6.0	3.8 ◁—▷5.1	6.0	6.4	5.4	5.6	5.0	3.1	9.1	5.000	15.000
94512-0311	NICHELATO/ NICKEL	ACCIAIO/ STEEL											

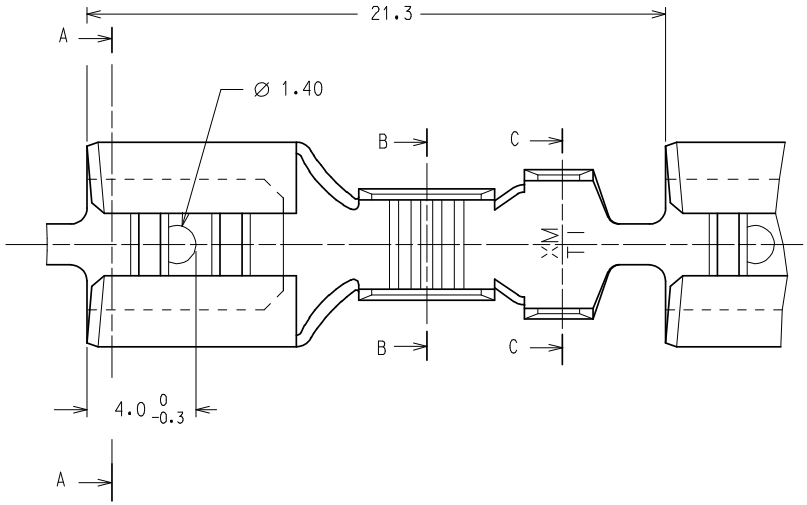

Confezione Standard: 3 Bobine x Scatola

Caratteristiche di Prodotto secondo PS 94512-001

Packaging: 3 Reels x Box

Product Characteristics according to PS 94512-002

Std. Descr.: HRT FEM TERM [material] [plating] [wire range]

EC NO: Z2008-0123	DRWN: LSANTESS 2008/02/25	CH'KD: LSANTESS 2008/02/25	APPR: GZUIN 2008/02/25
DESCRIPTION			
E	REV		

QUALITY SYMBOLS: ▼=0 ; (C)=0

GENERAL TOLERANCES (UNLESS SPECIFIED)

	mm	INCH
4 PLACES	± ---	± ---
3 PLACES	± ---	± ---
2 PLACES	± 0.1	± ---
1 PLACE	± 0.2	± ---
ANGULAR ± 2 °		

DRAFT WHERE APPLICABLE MUST REMAIN WITHIN DIMENSIONS

DIMENSION STYLE: MM ONLY

SCALE: 5:1

DESIGN UNITS: METRIC

FIRST ANGLE PROJECTION

DRAWN BY: F.GOTTARDO DATE: 1989-12-01

CHECKED BY: M.PREVIATO DATE: 1989-12-01

APPROVED BY: R.MARTUCCI DATE: 1989-12-01

TITLE: HIGH RELIABILITY FEMALE TERMINAL 6.3 X 0.8

molex MOLEX INCORPORATED

MATERIAL NO.: See chart

DOCUMENT NO.: SD-94512-004

SHEET NO.: 1 OF 1

SIZE: A3

THIS DRAWING CONTAINS INFORMATION THAT IS PROPRIETARY TO MOLEX INCORPORATED AND SHOULD NOT BE USED WITHOUT WRITTEN PERMISSION