IXYS

HiPerFET™ Power MOSFETs Single Die MOSFET

IXFE 39N90

V_{DSS}	=	900 V
I_{D25}	=	34 A
$R_{DS(on)}$	=	220 mΩ
t	≤	ns

N-Channel Enhancement Mode
Avalanche Rated, High dv/dt, Low t_{rr}

Preliminary Data

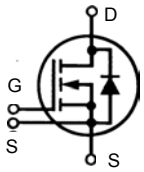

Symbol	Test Conditions	Maximum Ratings	
V_{DSS}	T_J = 25°C to 150°C	900	V
V_{DGR}	T_J = 25°C to 150°C; R_{GS} = 1 MΩ	900	V
V_{GS}	Continuous	±20	V
V_{GSM}	Transient	±30	V
I_{D25}	T_C = 25°C, Chip capability	34	A
I_{DM}	T_C = 25°C, Note 1	154	A
I_{AR}	T_C = 25°C	39	A
E_{AR}	T_C = 25°C	64	mJ
E_{AS}	T_C = 25°C	4	J
dv/dt	$I_S \le I_{DM}$, di/dt ≤ 100 A/µs, $V_{DD} \le V_{DSS}$ T_J ≤ 150°C, R_G = 2 Ω	5	V/ns
P_D	T_C = 25°C	580	W
T_J		-40 ... +150	°C
T_{JM}		150	°C
T_{stg}		-40 ... +150	°C
V_{ISOL}	50/60 Hz, RMS t = 1 min I_{ISOL} ≤ 1 mA t = 1 s	2500 3000	V~ V~
M_d	Mounting torque Terminal connection torque	1.5/13 1.5/13	Nm/lb.in. Nm/lb.in.

Symbol	Test Conditions		Characteristic Values (T_J = 25°C, unless otherwise specified) min.	typ.	max.	
V_{DSS}	V_{GS} = 0 V, I_D = 3 mA		900			V
$V_{GH(th)}$	V_{DS} = V_{GS}, I_D = 8 mA		2.5		5.0	V
I_{GSS}	V_{GS} = ±20 V_{DC}, V_{DS} = 0				±200	nA
I_{DSS}	V_{DS} = V_{DSS} V_{GS} = 0 V	T_J = 25°C T_J = 125°C			100 2	µA mA
$R_{DS(on)}$	V_{GS} = 10 V, I_D = I_T Notes 2, 3				220	mΩ

ISOPLUS 227™ (IXFE)

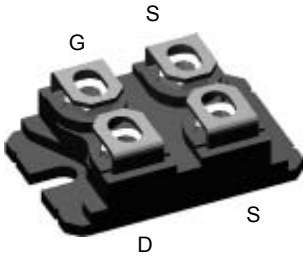

G = Gate D = Drain
S = Source

Either Source terminal at miniBLOC can be used as Main or Kelvin Source

Features
- Conforms to SOT-227B outline
- Low $R_{DS(on)}$ HDMOS™ process
- Rugged polysilicon gate cell structure
- Unclamped Inductive Switching (UIS) rated
- Low package inductance
- Fast intrinsic Rectifier

Applications
- DC-DC converters
- Battery chargers
- Switched-mode and resonant-mode power supplies
- DC choppers
- Temperature and lighting controls

Advantages
- Low cost
- Easy to mount
- Space savings
- High power density

© 2002 IXYS All rights reserved

Symbol	Test Conditions	Characteristic Values (T_J = 25°C, unless otherwise specified) min.	typ.	max.	
g_{fs}	V_{DS} = 15 V; $I_D = I_T$, Note 2	30	45		S
C_{iss}	V_{GS} = 0 V, V_{DS} = 25 V, f = 1 MHz		13400		pF
C_{oss}			1230		pF
C_{rss}			320		pF
$t_{d(on)}$	V_{GS} = 10 V, $V_{DS} = 0.5 \cdot V_{DSS}$, $I_D = I_T$ R_G = 1 Ω (External),		45		ns
t_r			68		ns
$t_{d(off)}$			125		ns
t_f			30		ns
$Q_{g(on)}$	V_{GS} = 10 V, $V_{DS} = 0.5 \cdot V_{DSS}$, $I_D = I_T$		375		nC
Q_{gs}			75		nC
Q_{gd}			190		nC
R_{thJC}				0.22	K/W
R_{thCK}			0.07		K/W

Source-Drain Diode — Characteristic Values (T_J = 25°C, unless otherwise specified)

Symbol	Test Conditions	min.	typ.	max.	
I_S	V_{GS} = 0 V			39	A
I_{SM}	Repetitive; Note 1			154	A
V_{SD}	$I_F = I_S$, V_{GS} = 0 V, Note 2			1.3	V
t_{rr}	I_F = 25A, -di/dt = 100 A/µs, V_R = 100 V			250	ns
Q_{RM}			2		µC
I_{RM}			9		A

Notes: 1. Pulse width limited by T_{JM}.
2. Pulse test, t ≤ 300 ms, duty cycle d ≤ 2%.
3. I_T Test current: I_T = 19.5 A

ISOPLUS-227 B

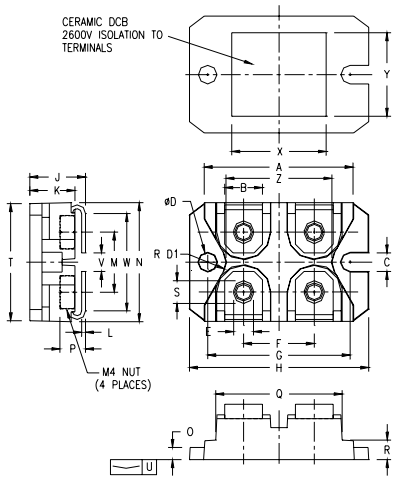

SYM	INCHES MIN	INCHES MAX	MILLIMETERS MIN	MILLIMETERS MAX
A	1.240	1.270	31.50	32.26
B	.310	.330	7.87	8.38
C	.155	.165	3.94	4.19
D	.155	.165	3.94	4.19
D1	.150	.157	3.81	3.98
E	.160	.168	4.06	4.27
F	.587	.595	14.91	15.11
G	1.186	1.193	30.12	30.30
H	1.489	1.505	37.80	38.23
J	.465	.481	11.81	12.22
K	.370	.380	9.40	9.65
L	.030	.033	0.76	0.84
M	.496	.506	12.60	12.85
N	.990	1.001	25.15	25.42
O	.100	.105	2.54	2.67
P	.195	.235	4.95	5.97
Q	1.045	1.059	26.54	26.90
R	.160	.170	4.06	4.32
S	.186	.191	4.72	4.85
T	.968	.987	24.59	25.07
U	-.001	.002	-0.03	0.05
V	.130	.160	3.30	4.06
W	.780	.830	19.81	21.08
X	.770	.810	19.56	20.57
Y	.680	.720	17.27	18.29
Z	.885	.892	22.48	22.66

Please see IXFN39N90 data sheet for characteristic curves.

IXYS reserves the right to change limits, test conditions, and dimensions.

IXYS MOSFETs and IGBTs are covered by one or more of the following U.S. patents: 4,835,592 4,881,106 5,017,508 5,049,961 5,187,117 5,486,715 6,306,728B1 4,850,072 4,931,844 5,034,796 5,063,307 5,237,481 5,381,025