LMT01 0.5°C Accurate 2-Pin Digital Output Temperature Sensor with Pulse Count Interface

1 Features

- High Accuracy Over –50°C to 150°C Wide Temperature Range
  - –20°C to 90°C: ±0.5°C (max)
  - 90°C to 150°C: ±0.625°C (max)
  - –50°C to –20°C: ±0.7°C (max)
- Precision Digital Temperature Measurement Simplified in a 2-Pin Package
- Pulse Count Current Loop Easily Read by Processor
- Number of Output Pulses is Proportional to Temperature with 0.0625°C Resolution
- Communication Frequency: 88 kHz
- Continuous Conversion Plus Data-Transmission Period: 100 ms
- Conversion Current: 34 µA
- Floating 2-V to 5.5-V (VP–VN) Supply Operation with Integrated EMI Immunity
- Multiple 2-Pin Package Offerings: TO-92/LPG (3.1 mm × 4 mm × 1.5 mm) – ½ the Size of Traditional TO-92 and WSON with Wettable Flanks

2 Applications

- Digital Output Wired Probes
- White Goods
- HVAC
- Power Supplies
- Industrial Internet of Things (IoT)
- Battery Management

3 Description

The LMT01 device is a high-accuracy, 2-pin temperature sensor with an easy-to-use pulse count current loop interface, which makes it suitable for on and off board applications in automotive, industrial, and consumer markets. The LMT01 digital pulse count output and high accuracy over a wide temperature range allow pairing with any MCU without concern for integrated ADC quality or availability, while minimizing software overhead. TI's LMT01 device achieves a maximum ±0.5°C accuracy with very fine resolution (0.0625°C) over a temperature range of –20°C to 90°C without system calibration or hardware/software compensation.

The LMT01's pulse count interface is designed to directly interface with a GPIO or comparator input, thereby simplifying hardware implementation. Similarly, the LMT01's integrated EMI suppression and simple 2-pin architecture makes it suitable for on-board and off-board temperature sensing in a noisy environment. The LMT01 device can be easily converted into a two-wire temperature probe with a wire length up to two meters. See LMT01-Q1 for the automotive qualified version.

Device Information(1)

PART NUMBER	PACKAGE	BODY SIZE (NOM)
LMT01LPG	TO-92 / LPG (2)	4.00 mm × 3.15 mm
LMT01DQX	WSON / DQX (2)	1.7 mm x 2.5 mm

(1) For all available packages, see the orderable addendum at the end of the data sheet.

2-Pin IC Temperature Sensor

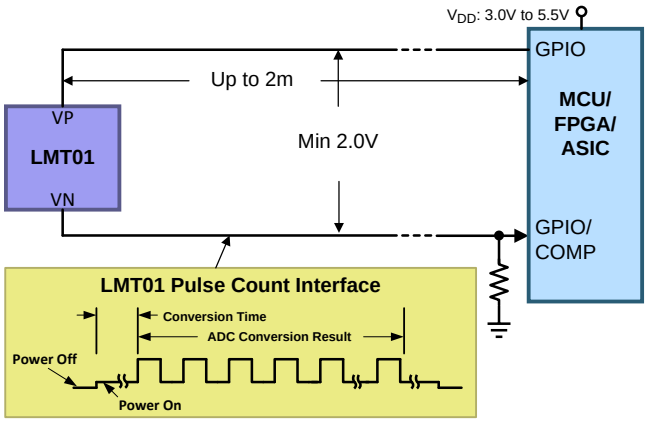

LMT01 Accuracy

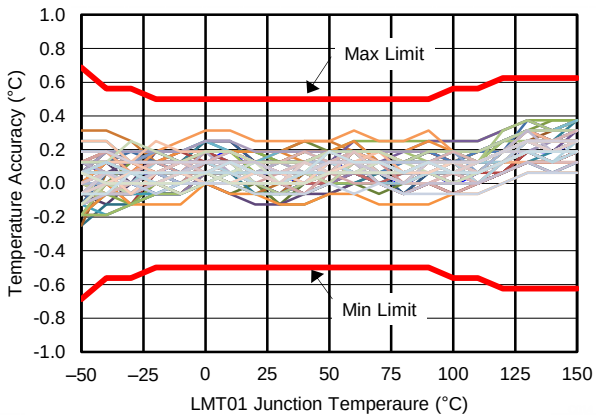

Typical units plotted in center of curve.

An IMPORTANT NOTICE at the end of this data sheet addresses availability, warranty, changes, use in safety-critical applications, intellectual property matters and other important disclaimers. PRODUCTION DATA.

Table of Contents

1 **Features** ... 1
2 **Applications** ... 1
3 **Description** ... 1
4 **Revision History** ... 2
5 **Pin Configuration and Functions** ... 3
6 **Specifications** ... 4
6.1 Absolute Maximum Ratings ... 4
6.2 ESD Ratings ... 4
6.3 Recommended Operating Conditions ... 4
6.4 Thermal Information ... 4
6.5 Electrical Characteristics: TO-92/LPG ... 5
6.6 Electrical Characteristics: WSON/DQX ... 6
6.7 Electrical Characteristics - TO-92/LPG Pulse Count to Temperature LUT ... 7
6.8 Electrical Characteristics - WSON/DQX Pulse Count to Temperature LUT ... 8
6.9 Switching Characteristics ... 8
6.10 Timing Specification Waveform ... 9
6.11 Typical Characteristics ... 10
7 **Detailed Description** ... 14
7.1 Overview ... 14
7.2 Functional Block Diagram ... 14
7.3 Feature Description ... 14
7.4 Device Functional Modes ... 18
8 **Application and Implementation** ... 19
8.1 Application Information ... 19
8.2 Typical Applications ... 20
8.3 System Examples ... 23
9 **Power Supply Recommendations** ... 24
10 **Layout** ... 25
10.1 Layout Guidelines ... 25
10.2 Layout Example ... 25
11 **Device and Documentation Support** ... 26
11.1 Receiving Notification of Documentation Updates 26
11.2 Community Resources ... 26
11.3 Trademarks ... 26
11.4 Electrostatic Discharge Caution ... 26
11.5 Glossary ... 26
12 **Mechanical, Packaging, and Orderable Information** ... 27

4 Revision History

Changes from Revision A (June 2015) to Revision B	Page
• Added new WSON/DQX package throughout data sheet	1
• Changed updated package information.	3
• Added Electrical Characteristics: WSON/DQX table	6
• Added Electrical Characteristics - WSON/DQX Pulse Count to Temperature LUT	8
• Added -40 for Sample Calculations Table	16
• Added missing cross reference	17

Changes from Original (June 2015) to Revision A	Page
• Added full datasheet.	1
• Added clarification note.	1

Copyright © 2015–2017, Texas Instruments Incorporated

5 Pin Configuration and Functions

DQX Package
2-Pin WSON
Bottom View

LPG Package
2-Pin TO-92

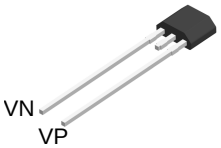

Pin Functions

PIN NAME	I/O	DESCRIPTION
VP	Input	Positive voltage pin - may be connected to system power supply or bias resistor
VN	Output	Negative voltage pin - may be connected to system ground or a bias resistor

6 Specifications

6.1 Absolute Maximum Ratings (1)(2)

	MIN	MAX	UNIT
Voltage drop (VP-VN)	−0.3V	6V	V
Storage temperature range, T_{stg}	−65	175°C	°C

(1) Stresses beyond those listed under *Absolute Maximum Ratings* may cause permanent damage to the device. These are stress ratings only, which do not imply functional operation of the device at these or any other conditions beyond those indicated under *Recommended Operating Conditions*. Exposure to absolute-maximum-rated conditions for extended periods may affect device reliability.
(2) Soldering process must comply with Reflow Temperature Profile specifications. Refer to www.ti.com/packaging.

6.2 ESD Ratings

		VALUE	UNIT
$V_{(ESD)}$ Electrostatic discharge	Human-body model (HBM), per ANSI/ESDA/JEDEC JS-001 (1)	±2000	V
	Charged-device model (CDM), per JEDEC specification JESD22-C101 (2)	±750	

(1) JEDEC document JEP155 states that 500-V HBM allows safe manufacturing with a standard ESD control process.
(2) JEDEC document JEP157 states that 250-V CDM allows safe manufacturing with a standard ESD control process.

6.3 Recommended Operating Conditions

	MIN	NOM	MAX	UNIT
Free-air temperature range	−50		150	°C
Voltage drop range (VP-VN)	2.0		5.5	V

6.4 Thermal Information

THERMAL METRIC		LMT01		UNIT
		DFN/WSON/DQX 2 PINS	TO-92/LPG 2 PINS	
$R_{\theta JA}$	Junction-to-ambient thermal resistance	213	177	°C/W
$R_{\theta JC(top)}$	Junction-to-case (top) thermal resistance	71	94	
$R_{\theta JB}$	Junction-to-board thermal resistance	81	152	
ψ_{JT}	Junction-to-top characterization parameter	2.4	33	
ψ_{JB}	Junction-to-board characterization parameter	79	152	
	Stirred Oil thermal response time to 63% of final value (package only)	0.4	0.8	sec
	Still air thermal response time to 63% of final value (package only)	9.4	28	sec

Copyright © 2015–2017, Texas Instruments Incorporated

6.5 Electrical Characteristics: TO-92/LPG

Over operating free-air temperature range and operating VP-VN range (unless otherwise noted).

PARAMETER		TEST CONDITIONS		MIN	TYP	MAX	UNIT
ACCURACY							
	Temperature accuracy (1)(2)	VP-VN of 2.15 V to 5.5 V	150°C	-0.625		0.625	°C
			120°C	-0.625		0.625	°C
			110°C	-0.5625		0.5625	°C
			100°C	-0.5625		0.5625	°C
			90°C	-0.5		0.5	°C
			25°C	-0.5	±0.125	0.5	°C
			-20°C	-0.5		0.5	°C
			-30°C	-0.5625		0.5625	°C
			-40°C	-0.625		0.625	°C
	Temperature accuracy (1)(2)	VP-VN of 2.15 V to 5.5 V	-50°C	-0.6875	±0.4	0.6875	°C
PULSE COUNT TRANSFER FUNCTION							
	Number of pulses at 0°C			800	808	816	
	Output pulse range			15		3228	
		Theoretical max (exceeds device rating)		1		4095	
	Resolution of one pulse				0.0625		°C
OUTPUT CURRENT							
I_{OL}	Output current variation	Low level		28	34	39	µA
I_{OH}		High level		112.5	125	143	µA
	High to Low level output current ratio			3.1	3.7	4.5	
POWER SUPPLY							
	Accuracy sensitivity to change in VP-VN	2.15 V ≤ VP-VN ≤ 5. 0 V (3)			40	133	m°C/V
	Leakage Current VP-VN	VDD ≤ 0.4 V			0.002	1	µA

(1) Calculated using Pulse Count to Temperature LUT and 0.0625°C resolution per pulse, see section *Electrical Characteristics - TO-92/LPG Pulse Count to Temperature LUT*.
(2) Error can be linearly interpolated between temperatures given in table as shown in the Accuracy vs Temperature curves in section *Typical Characteristics*.
(3) Limit is using end point calculation.

6.6 Electrical Characteristics: WSON/DQX

Over operating free-air temperature range and operating VP-VN range (unless otherwise noted).

PARAMETER		TEST CONDITIONS		MIN	TYP	MAX	UNIT
ACCURACY							
	Temperature accuracy (1)(2)	VP-VN of 2.15 V to 5.5 V	150°C	-0.625		0.625	°C
	Temperature accuracy (1)(2)	VP-VN of 2.15 V to 5.5 V	125°C	-0.75		0.75	°C
			120°C	-0.625		0.625	°C
			110°C	-0.5625		0.5625	°C
			100°C	-0.5625		0.5625	°C
			90°C	-0.5		0.5	°C
			25°C	-0.5	±0.125	0.5	°C
			-20°C	-0.5		0.5	°C
			-30°C	-0.5625		0.5625	°C
			-40°C	-0.625		0.625	°C
	Temperature accuracy (1)(2)	VP-VN of 2.15 V to 5.5 V	-50°C	-0.6875	±0.4	0.6875	°C
PULSE COUNT TRANSFER FUNCTION							
	Number of pulses at 0°C			800	808	816	
	Output pulse range			15		3228	
		Theoretical max (exceeds device rating)		1		4095	
	Resolution of one pulse				0.0625		°C
OUTPUT CURRENT							
I_{OL}	Output current variation	Low level		28	34	40	µA
I_{OH}		High level		112.5	125	143	µA
	High to Low level output current ratio			3.1	3.7	4.5	
POWER SUPPLY							
	Accuracy sensitivity to change in VP-VN	2.15 V ≤ VP-VN ≤ 5. 0 V (3)			40	133	m°C/V
	Leakage Current VP-VN	VDD ≤ 0.4 V			0.002	3.5	µA

(1) Calculated using Pulse Count to Temperature LUT and 0.0625°C resolution per pulse, see section *Electrical Characteristics - WSON/DQX Pulse Count to Temperature LUT*.
(2) Error can be linearly interpolated between temperatures given in table as shown in the Accuracy vs Temperature curves in section *Typical Characteristics*.
(3) Limit is using end point calculation.

Copyright © 2015–2017, Texas Instruments Incorporated

6.7 Electrical Characteristics - TO-92/LPG Pulse Count to Temperature LUT

Over operating free-air temperature range and VP-VN operating range (unless otherwise noted). LUT is short for Look-up Table.

PARAMETER	TEST CONDITIONS	MIN	TYP	MAX	UNITS
Digital output code	-50°C	15	26	37	pulses
	-40°C	172	181	190	
	-30°C	329	338	347	
	-20°C	486	494	502	
	-10°C	643	651	659	
	0°C	800	808	816	
	10°C	958	966	974	
	20°C	1117	1125	1133	
	30°C	1276	1284	1292	
	40°C	1435	1443	1451	
	50°C	1594	1602	1610	
	60°C	1754	1762	1770	
	70°C	1915	1923	1931	
	80°C	2076	2084	2092	
	90°C	2237	2245	2253	
	100°C	2398	2407	2416	
	110°C	2560	2569	2578	
	120°C	2721	2731	2741	
	130°C	2883	2893	2903	
	140°C	3047	3057	3067	
	150°C	3208	3218	3228	

Copyright © 2015–2017, Texas Instruments Incorporated

6.8 Electrical Characteristics - WSON/DQX Pulse Count to Temperature LUT

Over operating free-air temperature range and 2.15 V ≤ VP-VN ≤ 5. 0 V power supply operating range (unless otherwise noted). LUT is short for Look-up Table.

PARAMETER	TEST CONDITIONS	MIN	TYP	MAX	UNITS
Digital output code	-50°C	15	26	37	pulses
	-40°C	172	181	190	
	-30°C	328	337	346	
	-20°C	486	494	502	
	-10°C	643	651	659	
	0°C	800	808	816	
	10°C	958	966	974	
	20°C	1117	1125	1133	
	30°C	1276	1284	1292	
	40°C	1435	1443	1451	
	50°C	1594	1603	1611	
	60°C	1754	1762	1771	
	70°C	1915	1923	1931	
	80°C	2076	2084	2092	
	90°C	2237	2245	2254	
	100°C	2398	2407	2416	
	110°C	2560	2569	2578	
	120°C	2721	2731	2741	
	125°C	2802	2814	2826	
	130°C	2883	2894	2904	
	140°C	3047	3058	3068	
	150°C	3210	3221	3231	

6.9 Switching Characteristics

Over operating free-air temperature range and operating VP-VN range (unless otherwise noted).

PARAMETER		TEST CONDITIONS	MIN	TYP	MAX	UNITS
t_R, t_F	Output current rise and fall time	CL=10 pF, RL=8 k		1.45		µs
f_P	Output current pulse frequency		82	88	94	kHz
	Output current duty cycle		40%	50%	60%	
t_{CONV}	Temperature conversion time(1)	2.15 V to 5.5 V	46	50	54	ms
t_{DATA}	Data transmission time		44	47	50	ms

(1) Conversion time includes power up time or device turn on time that is typically 3 ms after POR threshold of 1.2V is exceeded.

Copyright © 2015–2017, Texas Instruments Incorporated

6.10 Timing Specification Waveform

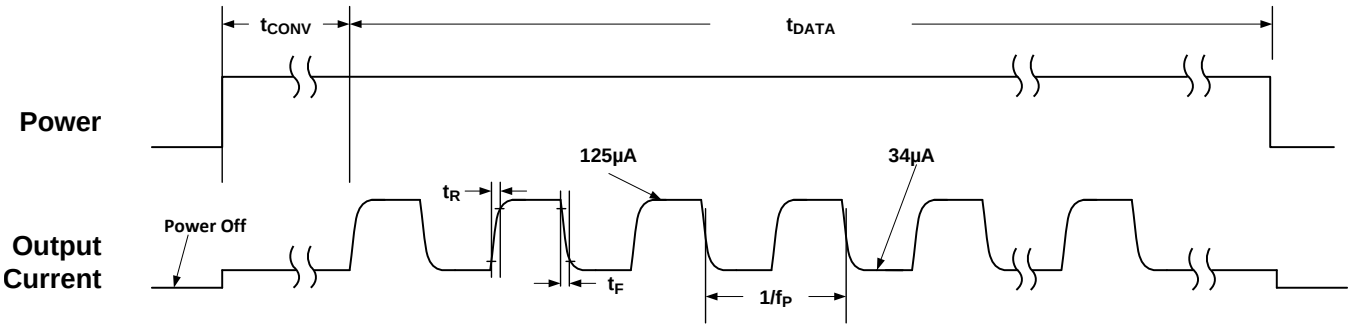

6.11 Typical Characteristics

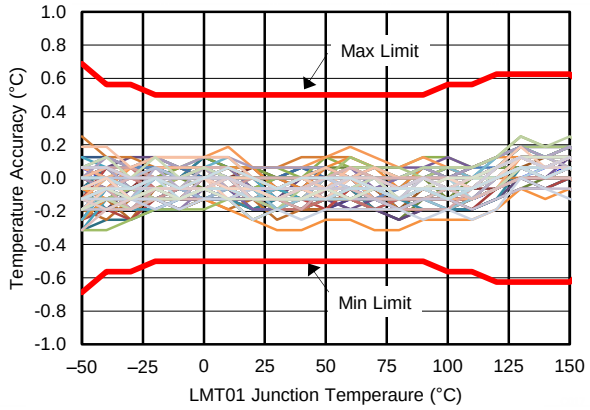

Using *Electrical Characteristics - TO-92/LPG Pulse Count to Temperature LUT*
VP - VN = 2.15 V

Figure 1. Accuracy vs LMT01 Junction Temperature

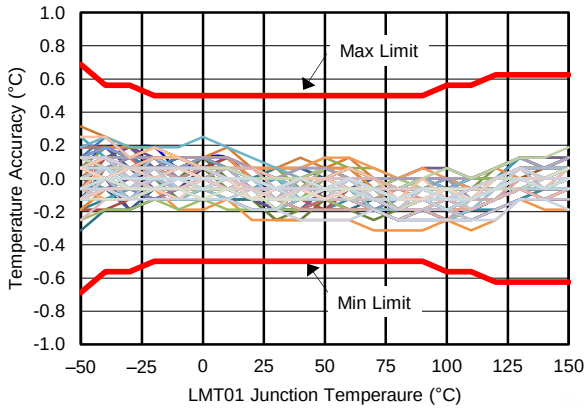

Using *Electrical Characteristics - TO-92/LPG Pulse Count to Temperature LUT*
VP - VN = 2.4 V

Figure 2. Accuracy vs LMT01 Junction Temperature

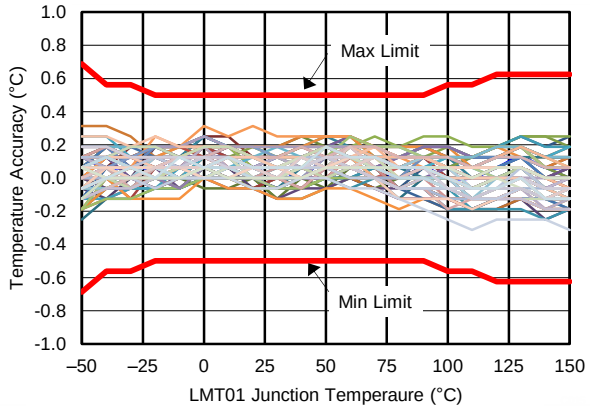

Using *Electrical Characteristics - TO-92/LPG Pulse Count to Temperature LUT*
VP - VN = 2.7 V

Figure 3. Accuracy vs LMT01 Junction Temperature

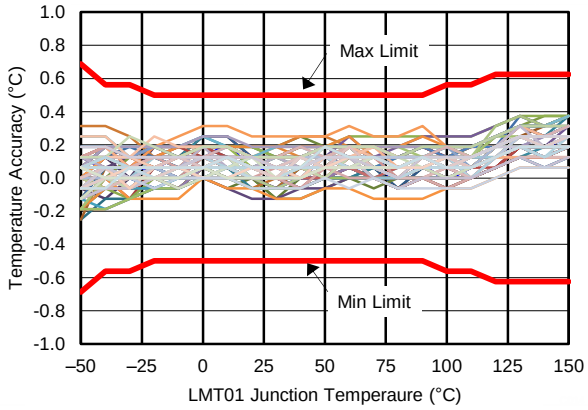

Using *Electrical Characteristics - TO-92/LPG Pulse Count to Temperature LUT*
VP - VN = 3 V

Figure 4. Accuracy vs LMT01 Junction Temperature

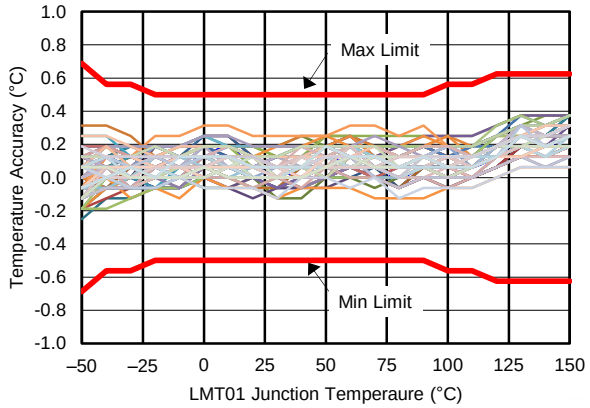

Using *Electrical Characteristics - TO-92/LPG Pulse Count to Temperature LUT*
VP - VN = 4 V

Figure 5. Accuracy vs LMT01 Junction Temperature

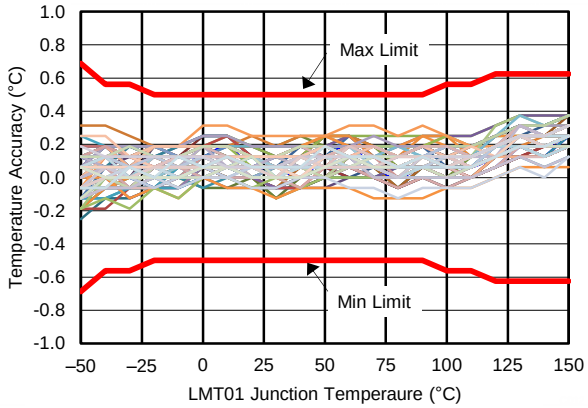

Using *Electrical Characteristics - TO-92/LPG Pulse Count to Temperature LUT*
VP - VN = 5 V

Figure 6. Accuracy vs LMT01 Junction Temperature

Copyright © 2015–2017, Texas Instruments Incorporated

Typical Characteristics (continued)

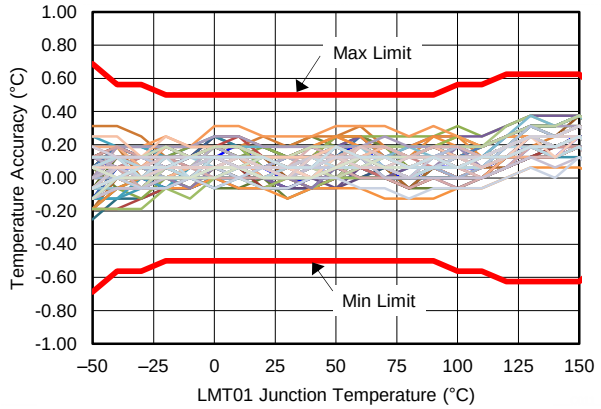

Using *Electrical Characteristics - TO-92/LPG Pulse Count to Temperature LUT*
VP - VN = 5.5 V

Figure 7. Accuracy vs LMT01 Junction Temperature

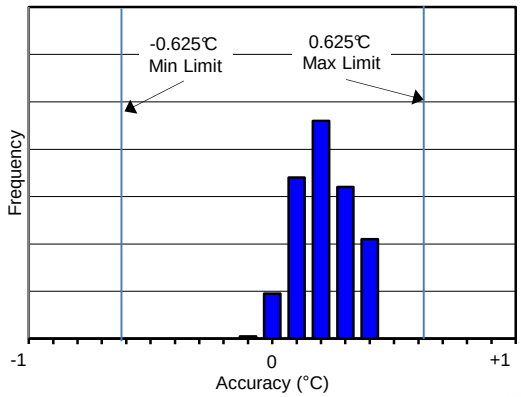

Using *Electrical Characteristics - TO-92/LPG Pulse Count to Temperature LUT*
VP - VN = 2.15 V to 5.5 V

Figure 8. Accuracy Histogram at 150°C

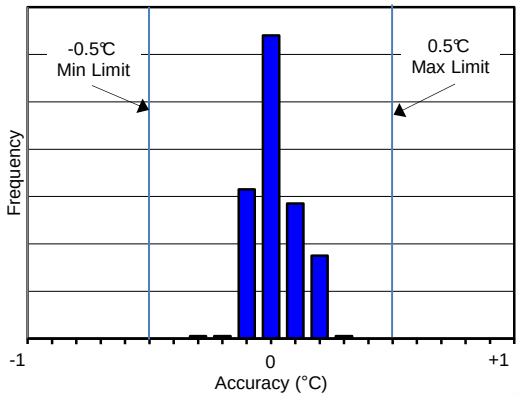

Using *Electrical Characteristics - TO-92/LPG Pulse Count to Temperature LUT*
VP - VN = 2.15 V to 5.5 V

Figure 9. Accuracy Histogram at 30°C

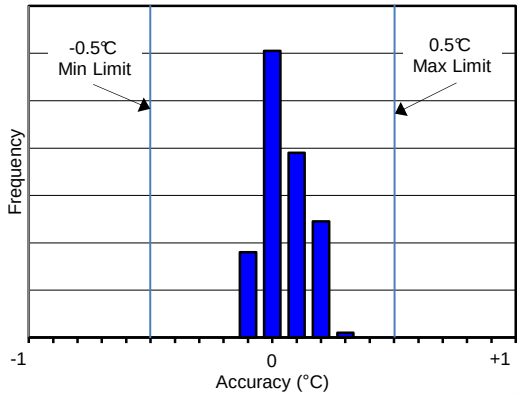

Using *Electrical Characteristics - TO-92/LPG Pulse Count to Temperature LUT*
VP - VN = 2.15 V to 5.5 V

Figure 10. Accuracy Histogram at -20°C

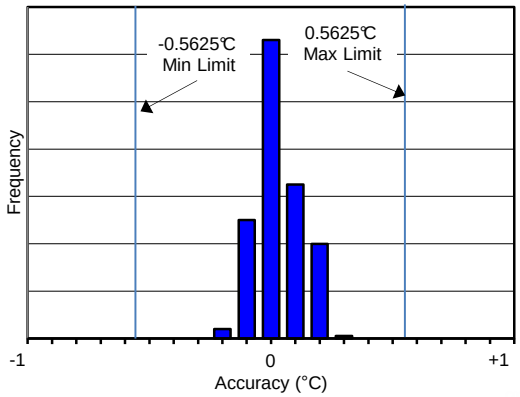

Using LUT *Electrical Characteristics - TO-92/LPG Pulse Count to Temperature LUT*
VP - VN = 2.15 V to 5.5 V

Figure 11. Accuracy Histogram at -30°C

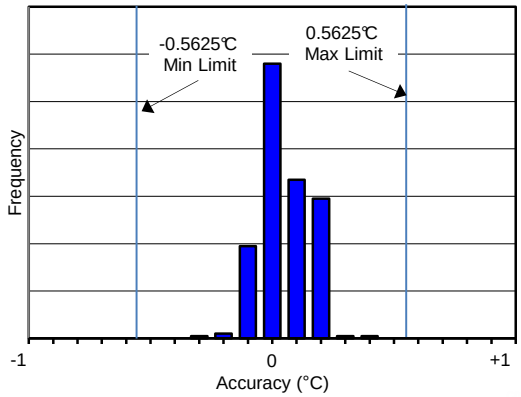

Using *Electrical Characteristics - TO-92/LPG Pulse Count to Temperature LUT*
VP - VN = 2.15 V to 5.5 V

Figure 12. Accuracy Histogram at -40°C

Typical Characteristics (continued)

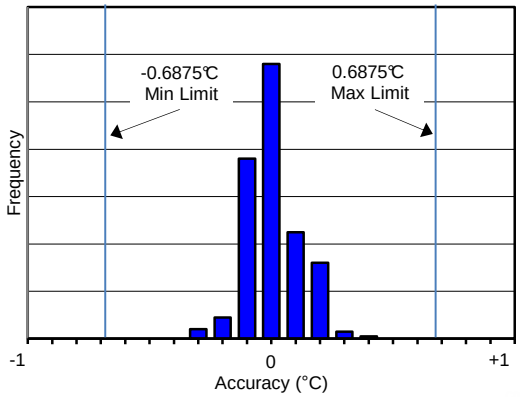

Using LUT *Electrical Characteristics - TO-92/LPG Pulse Count to Temperature LUT*
VP - VN = 2.15 V to 5.5 V

Figure 13. Accuracy Histogram at -50°C

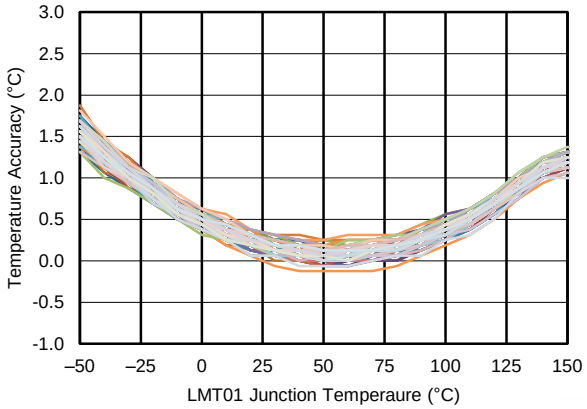

Using Temp = (PC/4096 x 256°C) - 50°C
VP - VN = 2.15 V

Figure 14. Accuracy Using Linear Transfer Function

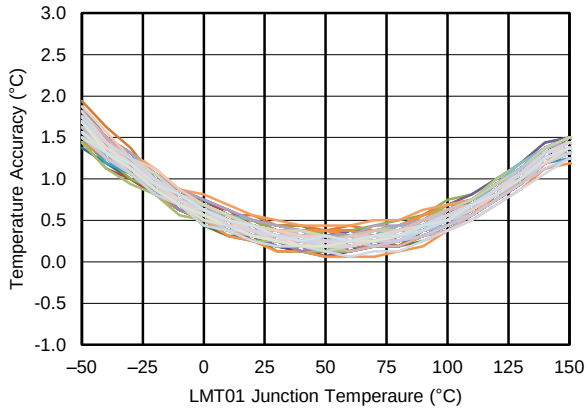

Using Temp = (PC/4096 x 256°C) - 50°C
VP - VN = 5.5V

Figure 15. Accuracy Using Linear Transfer Function

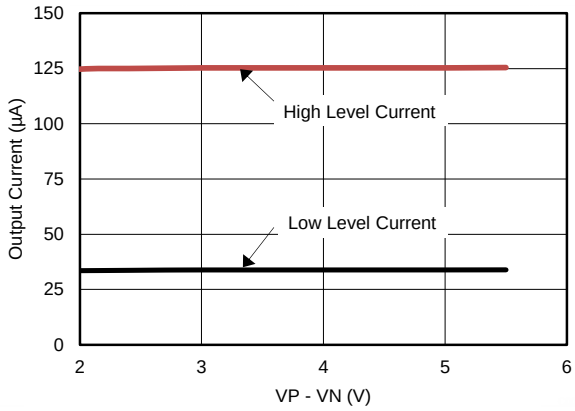

T_A = 30°C

Figure 16. Output Current vs VP-VN Voltage

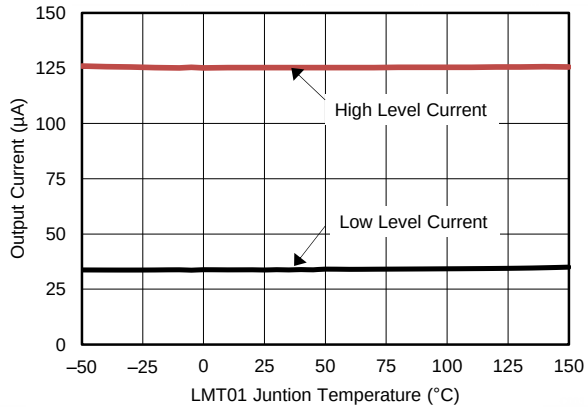

VP – VN = 3.3 V

Figure 17. Output Current vs Temperature

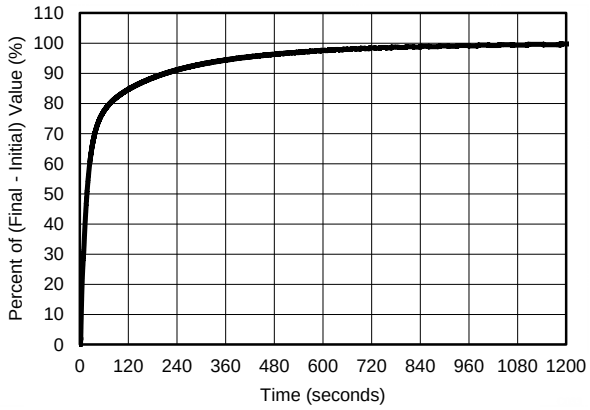

VP-VN=3.3 V
$T_{INITIAL}$=23°C, T_{FINAL}=70°C

Figure 18. Thermal Response in Still Air (TO92S/LPG Package)

Copyright © 2015–2017, Texas Instruments Incorporated

Typical Characteristics (continued)

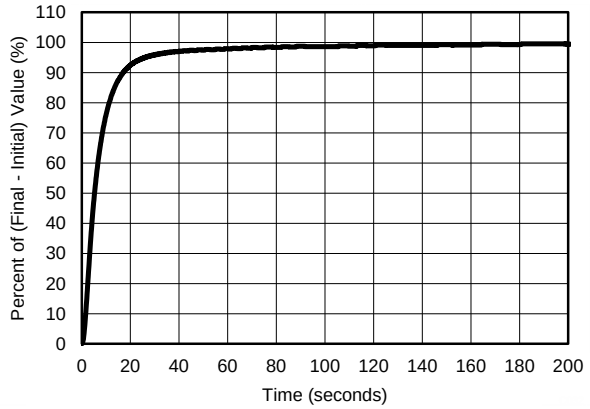

VP-VN=3.3 V
$T_{INITIAL}$=23°C, T_{FINAL}=70°C
Air Flow=2.34 meters/sec

Figure 19. Thermal Response in Moving Air (TO92S/LPG Package)

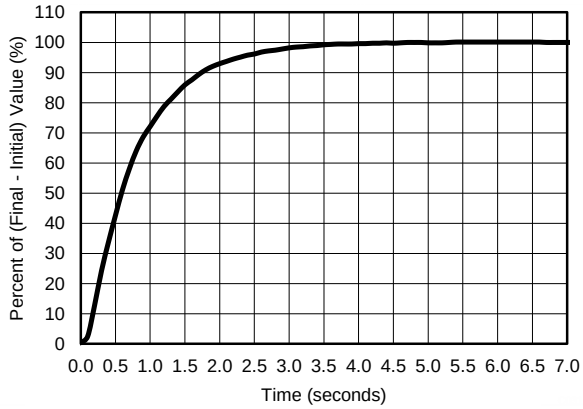

VP-VN=3.3 V
$T_{INITIAL}$=23°C, T_{FINAL}=70°C

Figure 20. Thermal Response in Stirred Oil (TO92S/LPG Package)

7 Detailed Description

7.1 Overview

The LMT01 temperature output is transmitted over a single wire using a train of current pulses that typically change from 34 µA to 125 µA. A simple resistor can then be used to convert the current pulses to a voltage. With a 10 kΩ the output voltage levels range from 340 mV to 1.25 V, typically. A simple microcontroller comparator or external transistor can be used convert this signal to valid logic levels the microcontroller can process properly through a GPIO pin. The temperature can be determined by gating a simple counter on for a specific time interval to count the total number of output pulses. After power is first applied to the device the current level will remain below 34 µA for at most 54ms while the LMT01 is determining the temperature. Once the temperature is determined the pulse train will begin. The individual pulse frequency is typically 88 kHz. The LMT01 will continuously convert and transmit data when the power is applied approximately every 104 ms (max).

The LMT01 uses thermal diode analog circuitry to detect the temperature. The temperature signal is then amplified and applied to the input of a ΣΔ ADC that is driven by an internal reference voltage. The ΣΔ ADC output is then processed through the interface circuitry into a digital pulse train. The digital pulse train is then converted to a current pulse train by the output signal conditioning circuitry that includes high and low current regulators. The voltage applied across the LMT01's pins is regulated by an internal voltage regulator to provide a consistent Chip V_{DD} that is used by the ADC and its associated circuitry.

7.2 Functional Block Diagram

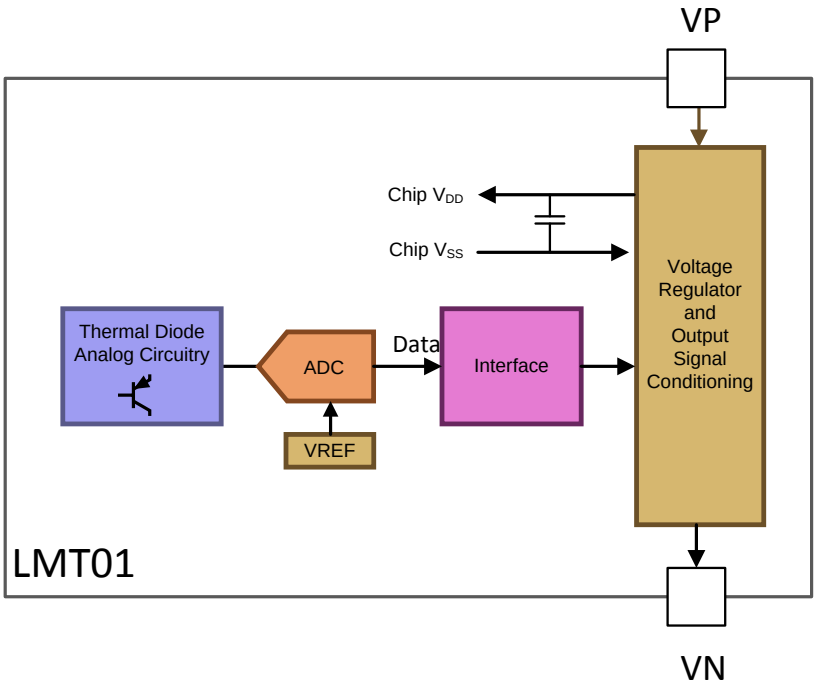

7.3 Feature Description

7.3.1 Output Interface

The LMT01 provides a digital output in the form of a pulse count that is transmitted by a train of current pulses. After the LMT01 is powered up it will transmit a very low current of 34 µA for less than 54 ms while the part executes a temperature to digital conversion, as shown in *Figure 21*. Once the temperature to digital conversion has completed the LMT01 will start to transmit a pulse train that toggles from the low current of 34 µA to a high current level of 125 µA. The pulse train total time interval is at maximum 50 ms. The LMT01 will transmit a series

Copyright © 2015–2017, Texas Instruments Incorporated

Feature Description (continued)

of pulses equivalent to the pulse count at a given temperature as described in *Electrical Characteristics - TO-92/LPG Pulse Count to Temperature LUT*. After the pulse count has been transmitted the LMT01 current level will remain low for the remainder of the 50 ms. The total time for the temperature to digital conversion and the pulse train time interval is 104 ms (max). If power is continuously applied the pulse train output will repeat start every 104 ms (max).

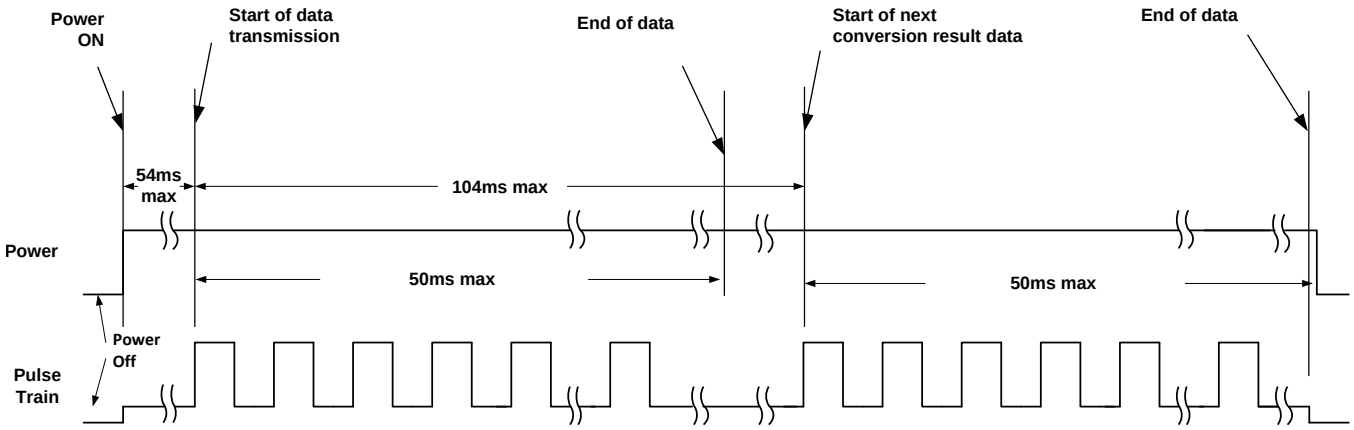

Figure 21. Temperature to Digital Pulse Train Timing Cycle

The LMT01 can be powered down at any time thus conserving system power. Care must be taken though, that a power down wait time of 50ms, minimum, be used before the device is turned on again.

7.3.2 Output Transfer Function

The LMT01 will output at minimum 1 pulse and a theoretical maximum 4095 pulses. Each pulse has a weight of 0.0625°C. One pulse corresponds to a temperature less than -50°C while a pulse count of 4096 corresponds to a temperature greater than 200°C. Note that the LMT01 is only ensured to operate up to 150°C. Exceeding this temperature by more than 5°C may damage the device. The accuracy of the device degrades as well when 150°C is exceeded.

Two different methods of converting the pulse count to a temperature value will be discussed in this section. The first method that will be discussed is the least accurate and uses a first order equation. The second method is the most accurate and uses linear interpolation of the values found in the look-up table (LUT) as described in *Electrical Characteristics - TO-92/LPG Pulse Count to Temperature LUT*.

The output transfer function appears to be linear and can be approximated by the following first order equation:

$$\text{Temp} = \left(\frac{\text{PC}}{4096} \times 256°\text{C}\right) - 50°\text{C} \quad (1)$$

where

- PC is the Pulse Count
- Temp is the temperature reading

Feature Description (continued)

Table 1 shows some sample calculations using Equation 1

Table 1. Sample Calculations Using Equation 1

TEMPERATURE (°C)	NUMBER OF PULSES
-49.9375	1
-49.875	2
-40	160
-20	480
0	800
30	1280
50	1600
100	2400
150	3200

The curve shown in Figure 22 shows the output transfer function using equation Equation 1 (blue line) and the look-up table (LUT) found in *Electrical Characteristics - TO-92/LPG Pulse Count to Temperature LUT* (red line). The LMT01 output transfer function as described by the LUT appears to be linear, but upon close inspection it can be seen that it truly is not linear. To actually see the difference, the accuracy obtained by the two methods must be compared.

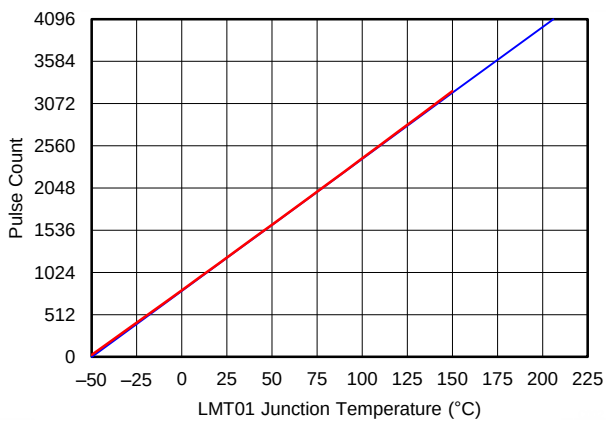

Figure 22. LMT01 Output Transfer Function

Copyright © 2015–2017, Texas Instruments Incorporated

For more exact temperature readings the output pulse count can be converted to temperature using linear interpolation of the values found in *Electrical Characteristics - TO-92/LPG Pulse Count to Temperature LUT* and .

The curves in Figure 23 and Figure 24, show the accuracy of typical units when using the Equation 1 and linear interpolation using *Electrical Characteristics - TO-92/LPG Pulse Count to Temperature LUT*, respectively. When compared, the improved performance when using the LUT linear interpolation method can clearly be seen. For a limited temperature range of 25°C to 80°C the error shown in Figure 23 is flat and thus the linear equation will provide good results. For a wide temperature range Ti recommends that linear interpolation and the LUT be used.

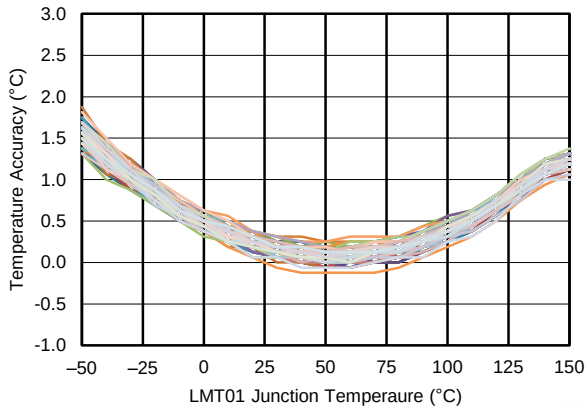

Figure 23. LMT01 Typical Accuracy When Using First Order Equation Equation 1 - 92 Typical Units Plotted at (VP - VN) = 2.15 V

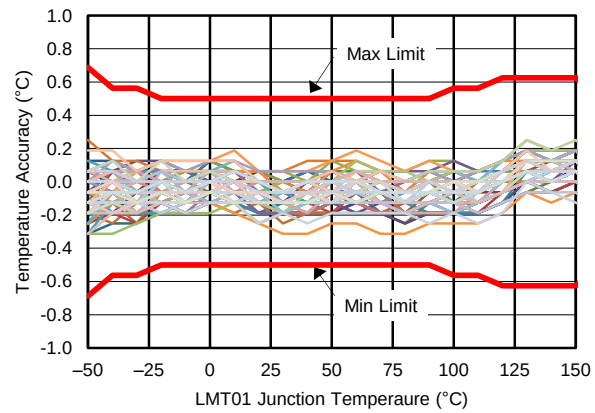

Figure 24. LMT01 Accuracy Using Linear Interpolation of LUT Found In *Electrical Characteristics - TO-92/LPG Pulse Count to Temperature LUT* - 92 typical units plotted at (VP - VN) = 2.15 V

7.3.3 Current Output Conversion to Voltage

The minimum voltage drop across the LMT01 must be maintained at 2.15 V during the conversion cycle. After the conversion cycle the minimum voltage drop can decrease to 2.0 V. Thus the LMT01 can be used for low voltage applications See Application Information section on low voltage operation and other information on picking the actual resistor value for different applications conditions. The resistor value is dependent on the power supply level and it's variation and the threshold level requirements of the circuitry it's driving (i.e. MCU GPIO or Comparator).

Stray capacitance can be introduced when connecting the LMT01 through a long wire. This stray capacitance will influence the signal rise and fall times. The wire inductance has negligible effect on the AC signal integrity. A simple RC time constant model as shown in Figure 25 can be used to determine the rise and fall times.

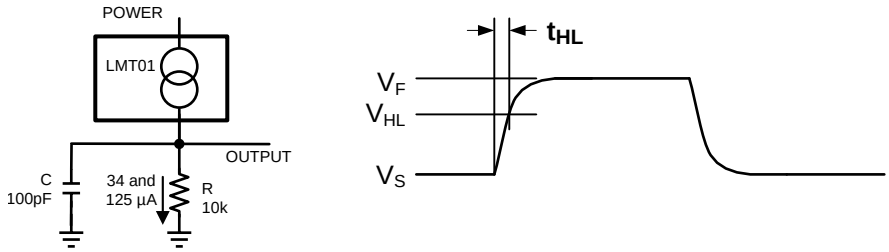

Figure 25. Simple RC Model for Rise and Fall Times

$$t_{HL} = R \times C \times \ln\left(\frac{V_F - V_S}{V_F - V_{HL}}\right)$$

where

- RC as shown in Figure 25
- V_{HL} is the target high level
- the final voltage V_F = 125 µA × R

- the start voltage V_S = 34 µA × R (2)

For the 10% to 90% level rise time (t_r), Equation 2 simplifies to:

$$t_r = R \times C \times 2.197 \quad (3)$$

Care must be taken to ensure under reverse bias conditions that the LMT01 voltage drop does not exceed 300mV, as given in the Absolute Maximum Ratings.

7.4 Device Functional Modes

The only functional mode the LMT01 has is that it provides a pulse count output that is directly proportional to temperature.

Copyright © 2015–2017, Texas Instruments Incorporated

8 Application and Implementation

NOTE

Information in the following applications sections is not part of the TI component specification, and TI does not warrant its accuracy or completeness. TI's customers are responsible for determining suitability of components for their purposes. Customers should validate and test their design implementation to confirm system functionality.

8.1 Application Information

8.1.1 Mounting, Temperature Conductivity and Self Heating

The LMT01 can be applied easily in the same way as other integrated-circuit temperature sensors. It can be glued or cemented to a surface to ensure good temperature conductivity. The temperatures of the lands and traces to the leads of the LMT01 will also affect the temperature reading so they must be a thin as possible.

Alternatively, the LMT01 can be mounted inside a sealed-end metal tube, and can then be dipped into a bath or screwed into a threaded hole in a tank. As with any IC, the LMT01 and accompanying wiring and circuits must be kept insulated and dry, to avoid excessive leakage and corrosion. Printed-circuit coatings are often used to ensure that moisture cannot corrode the leads or circuit traces.

The LMT01's junction temperature is the actual temperature being measured by the device. The thermal resistance junction-to-ambient ($R_{\theta JA}$) is the parameter (from

) used to calculate the rise of a device junction temperature (self heating) due to its average power dissipation. The average power dissipation of the LMT01 is dependent on the temperature it is transmitting as it effects the output pulse count and the voltage across the device. Equation 4 is used to calculate the self heating in the LMT01's die temperature (T_{SH}).

$$T_{SH}=\left[\left(I_{OL}\times\frac{t_{CONV}}{(t_{CONV}+t_{DATA})}\times V_{CONV}\right)+\left(\left[\left(\frac{PC}{4096}\times\frac{(I_{OL}+I_{OH})}{2}\right)+\left(\frac{(4096-PC)}{4096}\times I_{OL}\right)\right]\times\frac{t_{DATA}}{(t_{CONV}+t_{DATA})}\right)\times V_{DATA}\right]\times R_{\theta JA}$$

where

- T_{SH} is the ambient temperature,
- I_{OL} and I_{OH} are the output low and high current level respectively,
- V_{CONV} is the voltage across the LMT01 during conversion,
- V_{DATA} is the voltage across the LMT01 during data transmission,
- t_{CONV} is the conversion time,
- t_{DATA} is the data transmission time,
- PC is the output pulse count,
- $R_{\theta JA}$ is the junction to ambient package thermal resistance (4)

Plotted in the curve Figure 26 are the typical average supply current (black line using left y axis) and the resulting self heating (red and violet lines using right y axis) during continuous conversions. A temperature range of -50°C to +150°C, a V_{CONV} of 5 V (red line) and 2.15 V (violet line) were used for the self heating calculation. As can be seen in the curve the average power supply current and thus the average self heating changes linearly over temperature because the number of pulses increases with temperature. A negligible self heating of about 45m°C is observed at 150°C with continuous conversions. If temperature readings are not required as frequently as every 100ms, self heating can be minimized by shutting down power to the part periodically thus lowering the average power dissipation.

Application Information (continued)

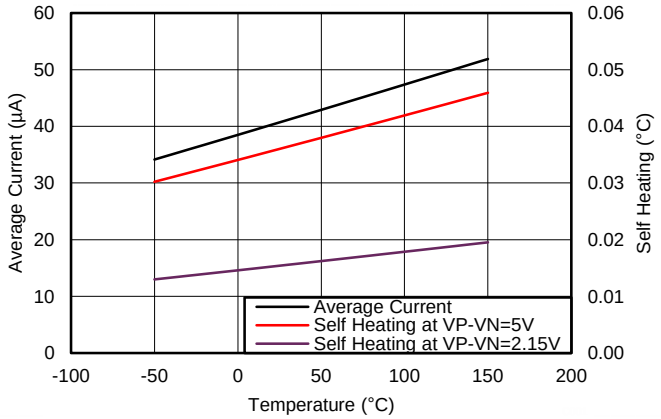

Figure 26. Average Current Draw and Self Heating Over Temperature

8.2 Typical Applications

8.2.1 3.3V System VDD MSP430 Interface - Using Comparator Input

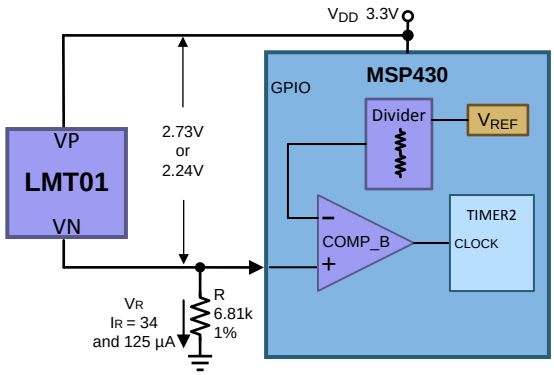

Figure 27. MSP430 Comparator Input Implementation

8.2.1.1 Design Requirements

The following design requirements will be used in the detailed design procedure.

VDD	3.3 V
VDD minimum	3.0 V
LMT01 VP – VN minimum during conversion	2.15 V
LMT01 VP – VN minimum during data transmission	2.0 V
Noise margin	50 mV min
Comparator input current over temperature range of interest	< 1 uA
Resistor tolerance	1%

Copyright © 2015–2017, Texas Instruments Incorporated

8.2.1.2 Detailed Design Procedure

First select the R and determine the maximum logic low voltage and the minimum logic high voltage while ensuring, that when the LMT01 is converting, the minimum (VP - VN) requirement of 2.15 V is met.

1. Select R using minimum VP-VN during data transmission (2 V) and maximum output current of the LMT01 (143.75 µA)
   – R = (3.0 V – 2 V) / 143.75 µA = 6.993 k the closest 1% resistor is 6.980 k
   – 6.993 k is the maximum resistance so if using 1% tolerance resistor the actual resistor value needs to be 1% less than 6.993 k and 6.98 k is 0.2% less than 6.993 k thus 6.81 k must be used.
2. Check to see if the LMT01's 2.15 V minimum voltage during conversion requirement is met with maximum I_{OL} of 39 µA and maximum R of 6.81 k + 1%:
   – V_{LMT01} = 3 V - (6.81 k x 1.01) × 39 µA = 2.73 V
3. Find the maximum low level voltage range using maximum R of 6.81k and maximum I_{OL} 39 µA:
   – V_{RLmax} = (6.81 k x 1.01) × 39 µA = 268 mV
4. Find the minimum high level voltage using the minimum R of 6.81k and minimum I_{OH} of 112.5 uA:
   – V_{RHmin} = (6.81 k x 0.99) × 112.5 µA = 758 mV

Now select the MSP430 comparator threshold voltage that will enable the LMT01 to communicate to the MSP430 properly.

1. The MSP430 voltage will be selected by selecting the internal V_{REF} and then choosing the appropriate 1 of n/32 settings for n of 1 to 31.
   – V_{MID}= (V_{RLmax}–V_{RHmin})/2 + V_{RHmin} = (758 mV - 268 mV)/2 + 268 mV= 513 mV
   – n = (V_{MID} / V_{REF}) × 32 = (0.513/2.5) × 32 = 7
2. To prevent oscillation of the comparator output hysteresis needs to implemented. The MSP430 allows this by enabling different n for rising edge and falling edge of the comparator output. Thus for a falling comparator output transition N must be set to 6.
3. Determine the noise margin caused by variation in comparator threshold level. Even though the comparator threshold level theoretically is set to V_{MID}, the actual level will vary from device to device due to V_{REF} tolerance, resistor divider tolerance, and comparator offset. For proper operation the COMP_B worst case input threshold levels must be within the minimum high and maximum low voltage levels presented across R, V_{RHmin} and V_{RLmax} respectively

$$V_{CHmax}=V_{REF}\times(1+V_REF_TOL)\times\frac{(N+N_TOL)}{32}+COMP_OFFSET \quad (5)$$

where
- VREF is the MSP430 COMP_B reference voltage for this example 2.5V,
- V_REF_TOL is the tolerance of the VREF of 1% or 0.01,
- N is the divisor for the MSP430 or 7
- N_TOL is the tolerance of the divisor or 0.5
- COMP_OFFSET is the comparator offset specification or 10mV

$$V_{CLmin}=V_{REF}\times(1-V_REF_TOL)\times\frac{(N-N_TOL)}{32}-COMP_OFFSET \quad (6)$$

where
- VREF is the MSP430 COMP_B reference voltage for this example 2.5V,
- V_REF_TOL is the tolerance of the VREF of 1% or 0.01,
- N is the divisor for the MSP430 for the hysteresis setting or 6,
- N_TOL is the tolerance of the divisor or 0.5,
- COMP_OFFSET is the comparator offset specification or 10mV

The noise margin is the minimum of the two differences:

(V_{RHmin}–V_{CHmax}) or (V_{CHmin}–V_{RLmax}) (7)

which works out to be 145 mV.

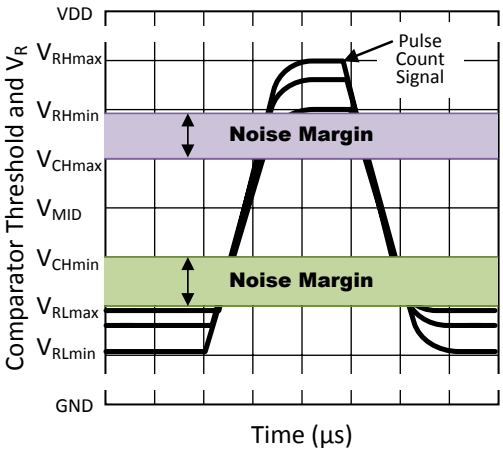

Figure 28. Pulse Count Signal Amplitude Variation

8.2.1.2.1 Setting the MSP430 Threshold and Hysteresis

The comparator hysteresis will determine the noise level that the signal can support without causing the comparator to trip falsely thus resulting in an inaccurate pulse count. The comparator hysteresis is set by the precision of the MSP430 and what thresholds it is capable of. For this case as the input signal transitions high the comparator threshold is dropped by 77 mV thus if the noise on the signal as it transitions is kept below this level the comparator will not trip falsely. In addition the MSP430 has a digital filter on the COMP_B output that be used to further filter output transitions that occur too quickly.

8.2.1.3 Application Curves

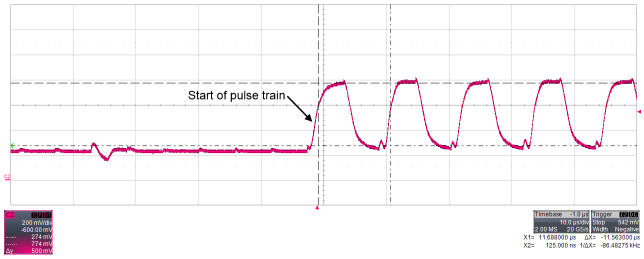

Amplitude = 200 mV/div Δy at cursors = 500 mV
Time Base = 10 µs/div Δx at cursors = 11.7 µs

Figure 29. MSP430 COMP_B Input Signal No Capacitance Load

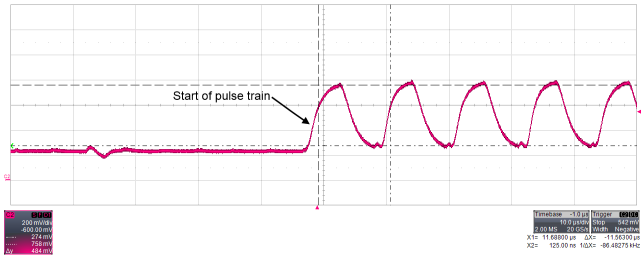

Amplitude = 200 mV/div Δy at cursors = 484 mV
Time Base = 10 µs/div Δx at cursors = 11.7 µs

Figure 30. MSP430 COMP_B Input Signal 100pF Capacitance Load

Copyright © 2015–2017, Texas Instruments Incorporated

8.3 System Examples

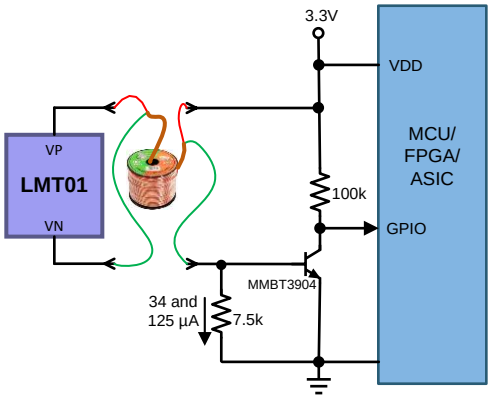

Figure 31. Transistor Level Shifting

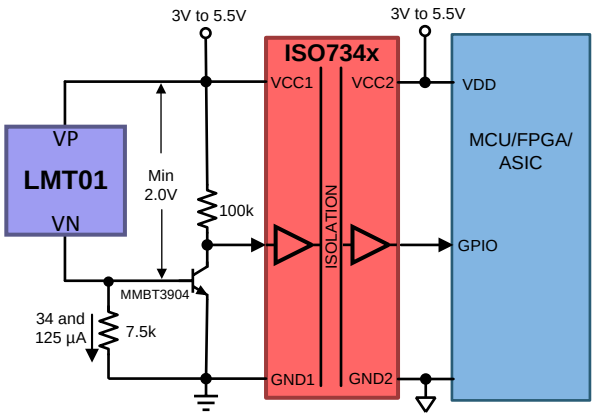

Figure 32. Isolation

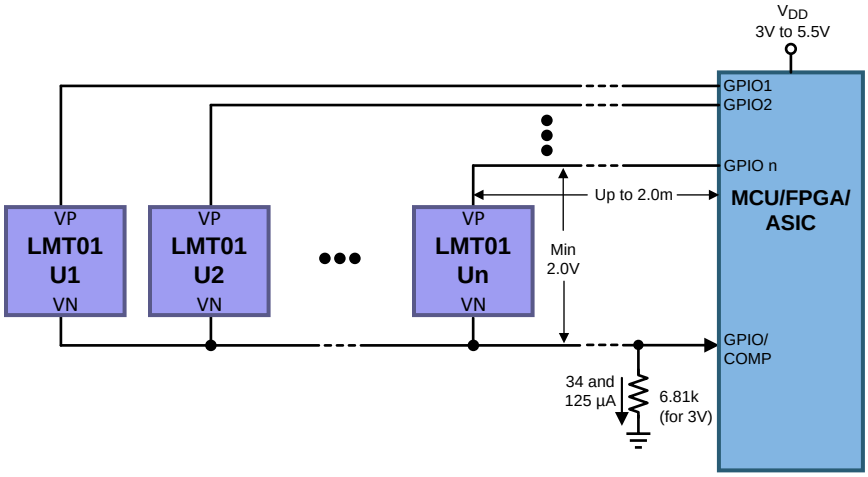

Note: to turn off an LMT01 set the GPIO pin connected to VP to high impedance state as setting it low would cause the off LMT01 to be reverse biased. Comparator input of MCU must be used.

Figure 33. Connecting Multiple Devices to One MCU Input Pin

System Examples (continued)

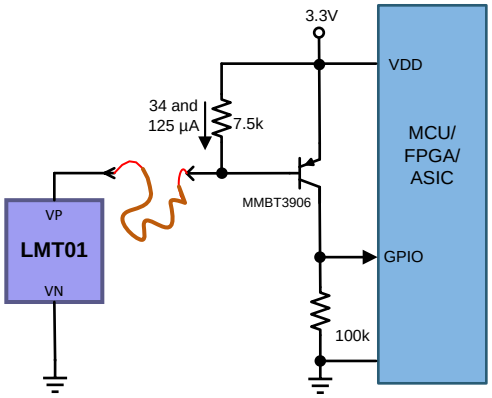

Note: the VN of the LMT01 must be connected to the MCU GND.

Figure 34. Common Ground With High Side Signal

9 Power Supply Recommendations

Because the LMT01 is only a 2-pin device the power pins are common with the signal pins, thus the LMT01 has a floating supply that can vary greatly. The LMT01 has an internal regulator that provides a stable voltage to internal circuitry.

Care must be taken to prevent reverse biasing of the LMT01 as exceeding the absolute maximum ratings may cause damage to the device.

Power supply ramp rate can effect the accuracy of the first result transmitted by the LMT01. As shown in Figure 35 with a 1ms rise time the LMT01 output code is at 1286 which converts to 30.125°C. The scope photo shown in Figure 36 reflects what happens when the rise time is too slow. As can be seen the power supply (yellow trace) is still ramping up to final value while the LMT01 (red trace) has already started a conversion. This causes the output pulse count to decrease from the 1286, shown previously, to 1282 or 29.875°C. Thus, for slow ramp rates TI recommends that the first conversion be discarded. For even slower ramp rates more than one conversion may have to be discarded as TI recommends that either the power supply be within final value before a conversion is used or that ramp rates be faster than 2.5 ms.

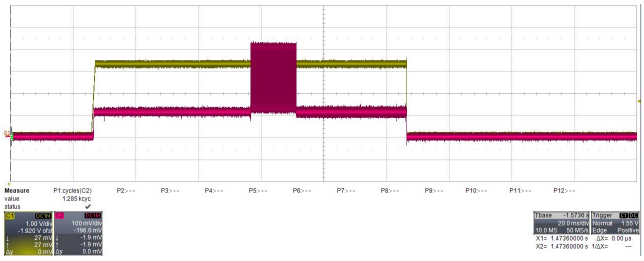

Yellow trace = 1 V/div, Red trace = 100 mV/div, Time Base = 20 ms/div

T_A= 30°C LMT01 Pulse Count = 1286

VP-VN = 3.3 V Rise Time = 1 ms

Figure 35. Output Pulse Count With Appropriate Power Supply Rise Time

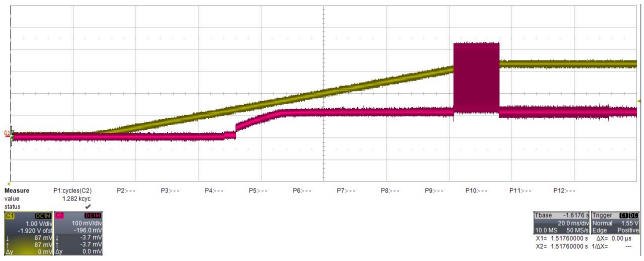

Yellow trace = 1V/div, Red trace = 100 mV/div, Time base = 20 ms/div

T_A=30°C LMT01 Pulse Count = 1282

VP-VN=3.3 V Rise Time = 100 ms

Figure 36. Output Pulse Count With Slow Power Supply Rise Time

Copyright © 2015–2017, Texas Instruments Incorporated

10 Layout

10.1 Layout Guidelines

The LMT01 can be mounted to a PCB as shown in Figure 37 and Figure 38. Care must be taken to make the traces leading to the LMT01's pads as small as possible to minimize their effect on the temperature the LMT01 is measuring.

10.2 Layout Example

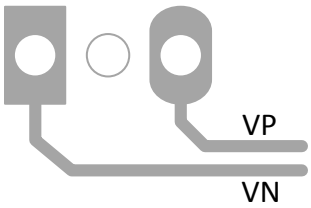

Figure 37. Layout Example

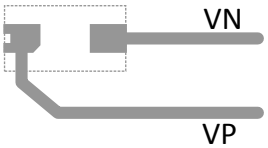

Figure 38. Layout Example

11 Device and Documentation Support

11.1 Receiving Notification of Documentation Updates

To receive notification of documentation updates, navigate to the device product folder on ti.com. In the upper right corner, click on *Alert me* to register and receive a weekly digest of any product information that has changed. For change details, review the revision history included in any revised document.

11.2 Community Resources

The following links connect to TI community resources. Linked contents are provided "AS IS" by the respective contributors. They do not constitute TI specifications and do not necessarily reflect TI's views; see TI's Terms of Use.

TI E2E™ Online Community ***TI's Engineer-to-Engineer (E2E) Community.*** Created to foster collaboration among engineers. At e2e.ti.com, you can ask questions, share knowledge, explore ideas and help solve problems with fellow engineers.

Design Support ***TI's Design Support*** Quickly find helpful E2E forums along with design support tools and contact information for technical support.

11.3 Trademarks

E2E is a trademark of Texas Instruments.
All other trademarks are the property of their respective owners.

11.4 Electrostatic Discharge Caution

This integrated circuit can be damaged by ESD. Texas Instruments recommends that all integrated circuits be handled with appropriate precautions. Failure to observe proper handling and installation procedures can cause damage.

ESD damage can range from subtle performance degradation to complete device failure. Precision integrated circuits may be more susceptible to damage because very small parametric changes could cause the device not to meet its published specifications.

11.5 Glossary

SLYZ022 — *TI Glossary*.

This glossary lists and explains terms, acronyms, and definitions.

Copyright © 2015–2017, Texas Instruments Incorporated

12 Mechanical, Packaging, and Orderable Information

The following pages include mechanical, packaging, and orderable information. This information is the most current data available for the designated devices. This data is subject to change without notice and revision of this document. For browser-based versions of this data sheet, refer to the left-hand navigation.

PACKAGE OUTLINE

LPG0002A

TO-92 - 5.05 mm max height

TO-92

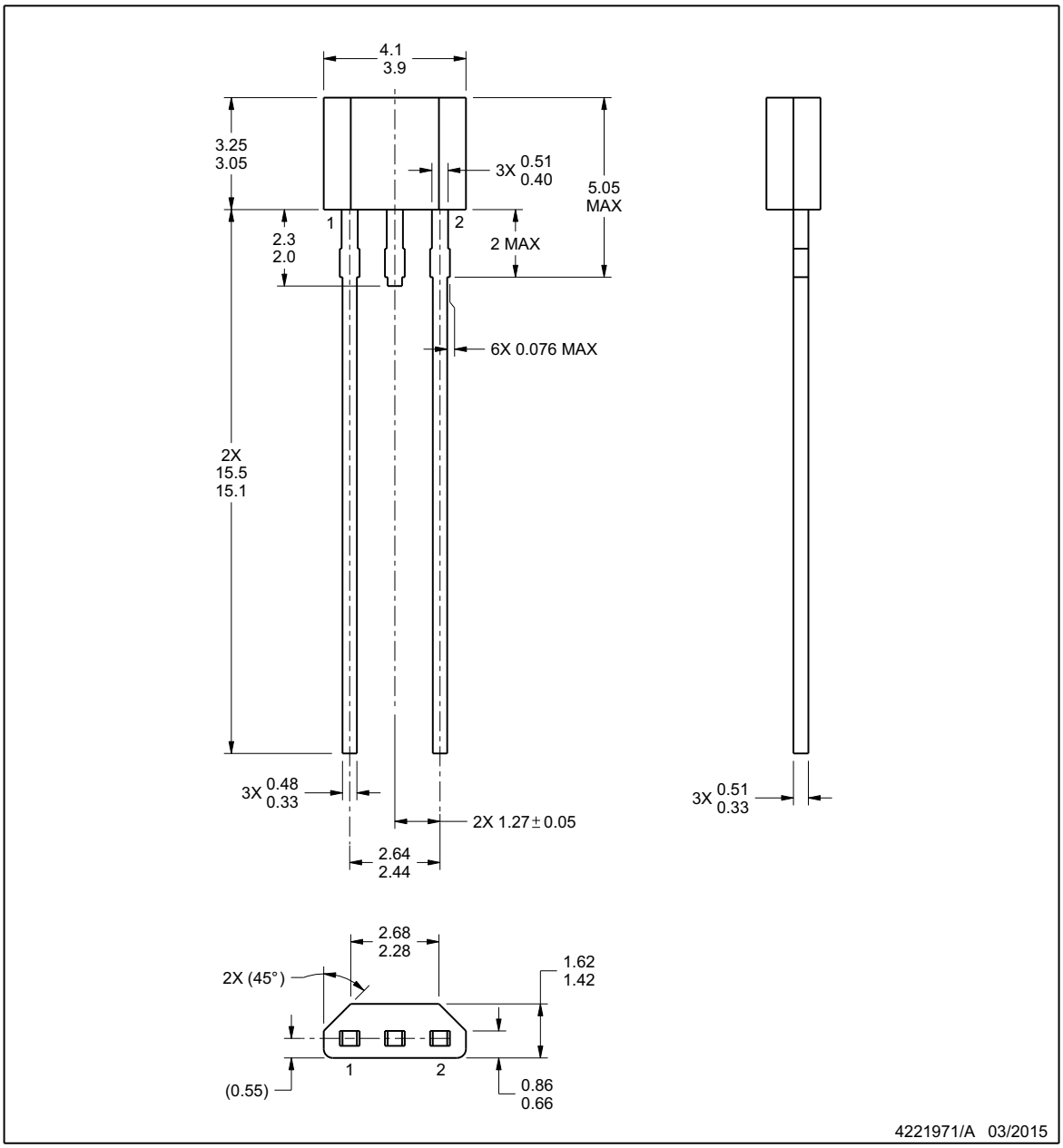

NOTES:

1. All linear dimensions are in millimeters. Any dimensions in parenthesis are for reference only. Dimensioning and tolerancing per ASME Y14.5M.
2. This drawing is subject to change without notice.

Copyright © 2015–2017, Texas Instruments Incorporated

EXAMPLE BOARD LAYOUT

LPG0002A

TO-92 - 5.05 mm max height

TO-92

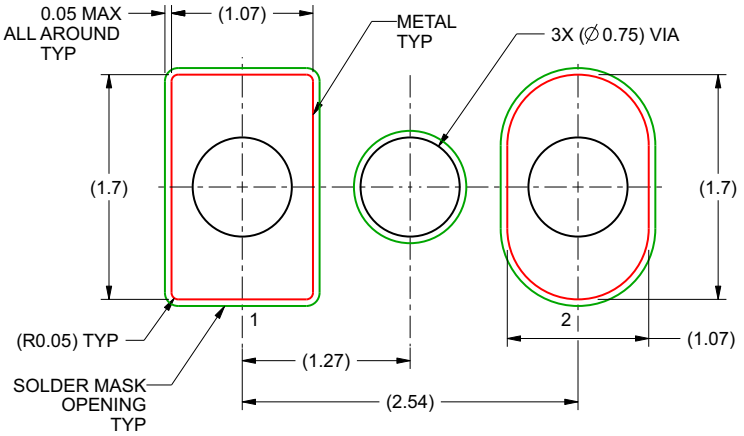

LAND PATTERN EXAMPLE
NON-SOLDER MASK DEFINED
SCALE:20X

4221971/A 03/2015

Copyright © 2015–2017, Texas Instruments Incorporated

PACKAGE OUTLINE

DQX0002A

WSON - 0.8 mm max height

PLASTIC SMALL OUTLINE - NO LEAD

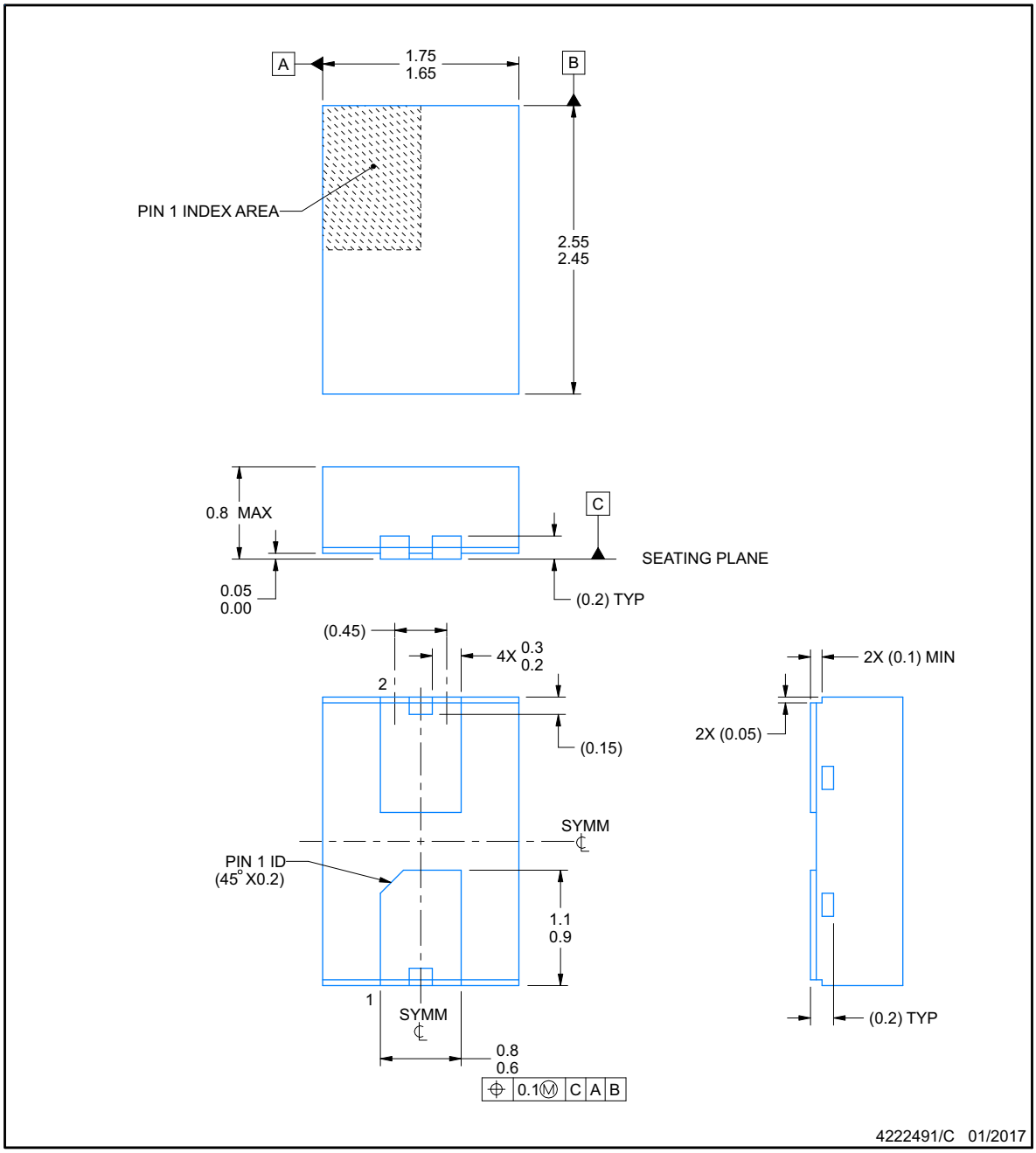

NOTES:

1. All linear dimensions are in millimeters. Any dimensions in parenthesis are for reference only. Dimensioning and tolerancing per ASME Y14.5M
2. This drawing is subject to change without notice.

Copyright © 2015–2017, Texas Instruments Incorporated

EXAMPLE STENCIL DESIGN

DQX0002A

WSON - 0.8 mm max height

PLASTIC SMALL OUTLINE - NO LEAD

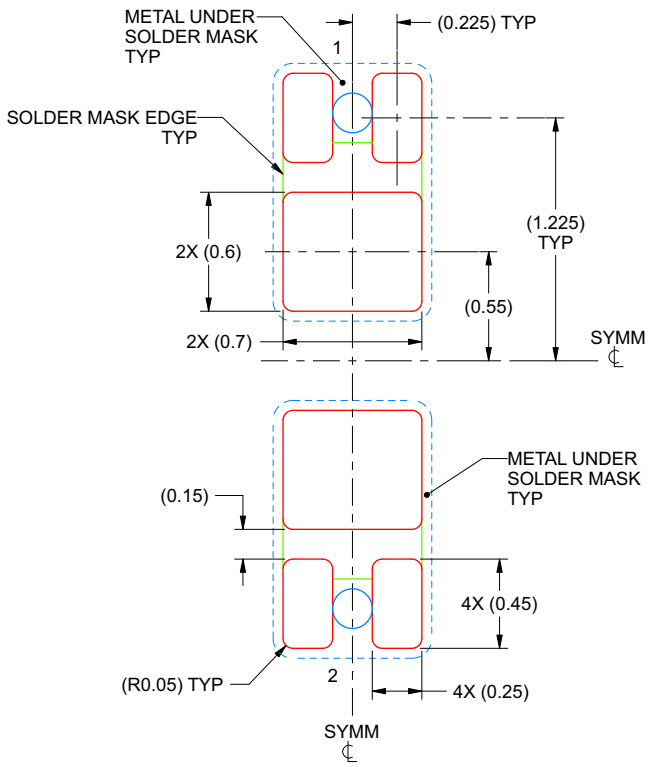

SOLDER PASTE EXAMPLE
BASED ON 0.1 mm THICK STENCIL

81% PRINTED SOLDER COVERAGE BY AREA UNDER PACKAGE
SCALE:30X

4222491/C 01/2017

NOTES: (continued)

5. Laser cutting apertures with trapezoidal walls and rounded corners may offer better paste release. IPC-7525 may have alternate design recommendations.

Copyright © 2015–2017, Texas Instruments Incorporated

PACKAGING INFORMATION

Orderable Device	Status (1)	Package Type	Package Drawing	Pins	Package Qty	Eco Plan (2)	Lead/Ball Finish (6)	MSL Peak Temp (3)	Op Temp (°C)	Device Marking (4/5)	Samples
LMT01DQXR	ACTIVE	WSON	DQX	2	3000	Green (RoHS & no Sb/Br)	CU	Level-1-260C-UNLIM	-50 to 150	13N	Samples
LMT01DQXT	ACTIVE	WSON	DQX	2	250	Green (RoHS & no Sb/Br)	CU	Level-1-260C-UNLIM	-50 to 150	13N	Samples
LMT01LPG	ACTIVE	TO-92	LPG	2	1000	Green (RoHS & no Sb/Br)	CU SN	N / A for Pkg Type	-50 to 150	LMT01	Samples
LMT01LPGM	ACTIVE	TO-92	LPG	2	3000	Green (RoHS & no Sb/Br)	CU SN	N / A for Pkg Type	-50 to 150	LMT01	Samples

(1) The marketing status values are defined as follows:
ACTIVE: Product device recommended for new designs.
LIFEBUY: TI has announced that the device will be discontinued, and a lifetime-buy period is in effect.
NRND: Not recommended for new designs. Device is in production to support existing customers, but TI does not recommend using this part in a new design.
PREVIEW: Device has been announced but is not in production. Samples may or may not be available.
OBSOLETE: TI has discontinued the production of the device.

(2) Eco Plan - The planned eco-friendly classification: Pb-Free (RoHS), Pb-Free (RoHS Exempt), or Green (RoHS & no Sb/Br) - please check http://www.ti.com/productcontent for the latest availability information and additional product content details.
TBD: The Pb-Free/Green conversion plan has not been defined.
Pb-Free (RoHS): TI's terms "Lead-Free" or "Pb-Free" mean semiconductor products that are compatible with the current RoHS requirements for all 6 substances, including the requirement that lead not exceed 0.1% by weight in homogeneous materials. Where designed to be soldered at high temperatures, TI Pb-Free products are suitable for use in specified lead-free processes.
Pb-Free (RoHS Exempt): This component has a RoHS exemption for either 1) lead-based flip-chip solder bumps used between the die and package, or 2) lead-based die adhesive used between the die and leadframe. The component is otherwise considered Pb-Free (RoHS compatible) as defined above.
Green (RoHS & no Sb/Br): TI defines "Green" to mean Pb-Free (RoHS compatible), and free of Bromine (Br) and Antimony (Sb) based flame retardants (Br or Sb do not exceed 0.1% by weight in homogeneous material)

(3) MSL, Peak Temp. - The Moisture Sensitivity Level rating according to the JEDEC industry standard classifications, and peak solder temperature.

(4) There may be additional marking, which relates to the logo, the lot trace code information, or the environmental category on the device.

(5) Multiple Device Markings will be inside parentheses. Only one Device Marking contained in parentheses and separated by a "~" will appear on a device. If a line is indented then it is a continuation of the previous line and the two combined represent the entire Device Marking for that device.

(6) Lead/Ball Finish - Orderable Devices may have multiple material finish options. Finish options are separated by a vertical ruled line. Lead/Ball Finish values may wrap to two lines if the finish value exceeds the maximum column width.

Important Information and Disclaimer: The information provided on this page represents TI's knowledge and belief as of the date that it is provided. TI bases its knowledge and belief on information provided by third parties, and makes no representation or warranty as to the accuracy of such information. Efforts are underway to better integrate information from third parties. TI has taken and continues to take reasonable steps to provide representative and accurate information but may not have conducted destructive testing or chemical analysis on incoming materials and chemicals. TI and TI suppliers consider certain information to be proprietary, and thus CAS numbers and other limited information may not be available for release.

In no event shall TI's liability arising out of such information exceed the total purchase price of the TI part(s) at issue in this document sold by TI to Customer on an annual basis.

OTHER QUALIFIED VERSIONS OF LMT01 :

- Automotive: LMT01-Q1

NOTE: Qualified Version Definitions:

- Automotive - Q100 devices qualified for high-reliability automotive applications targeting zero defects

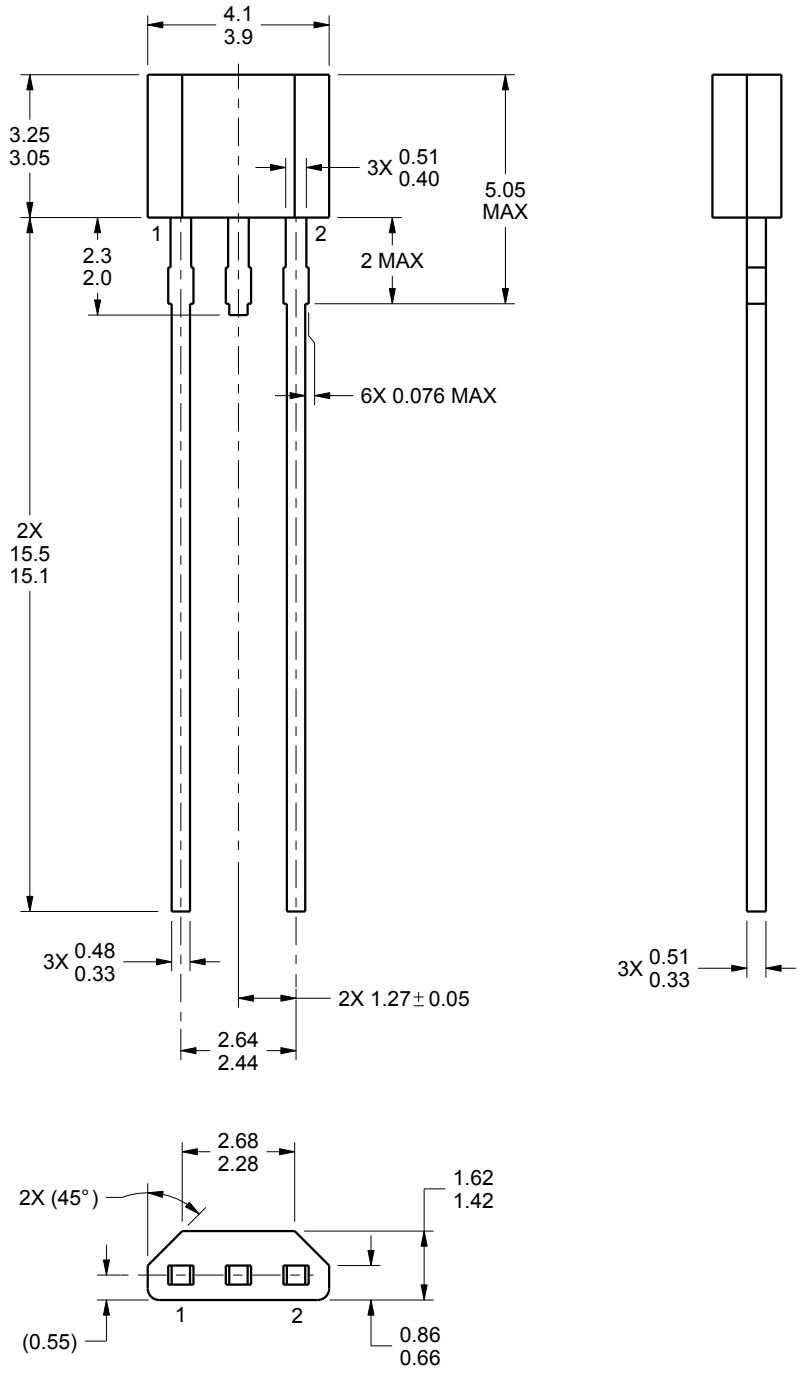

4221971/A 03/2015

NOTES:

1. All linear dimensions are in millimeters. Any dimensions in parenthesis are for reference only. Dimensioning and tolerancing per ASME Y14.5M.
2. This drawing is subject to change without notice.

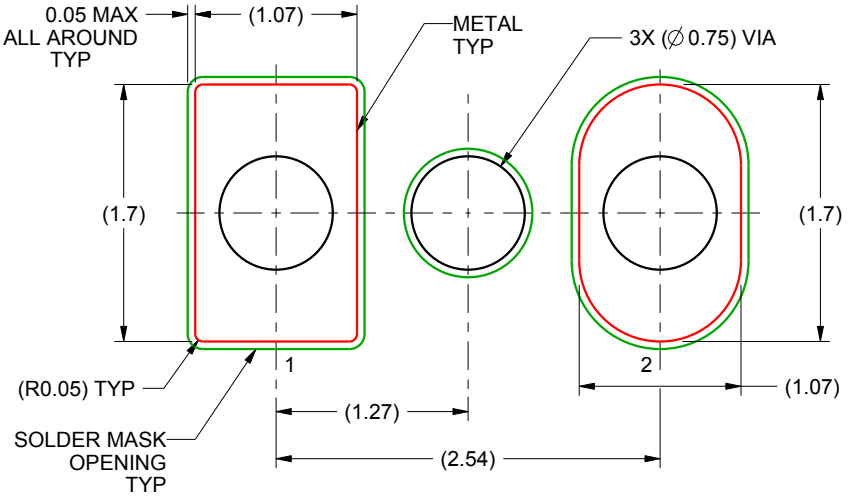

LAND PATTERN EXAMPLE
NON-SOLDER MASK DEFINED
SCALE:20X

4221971/A 03/2015

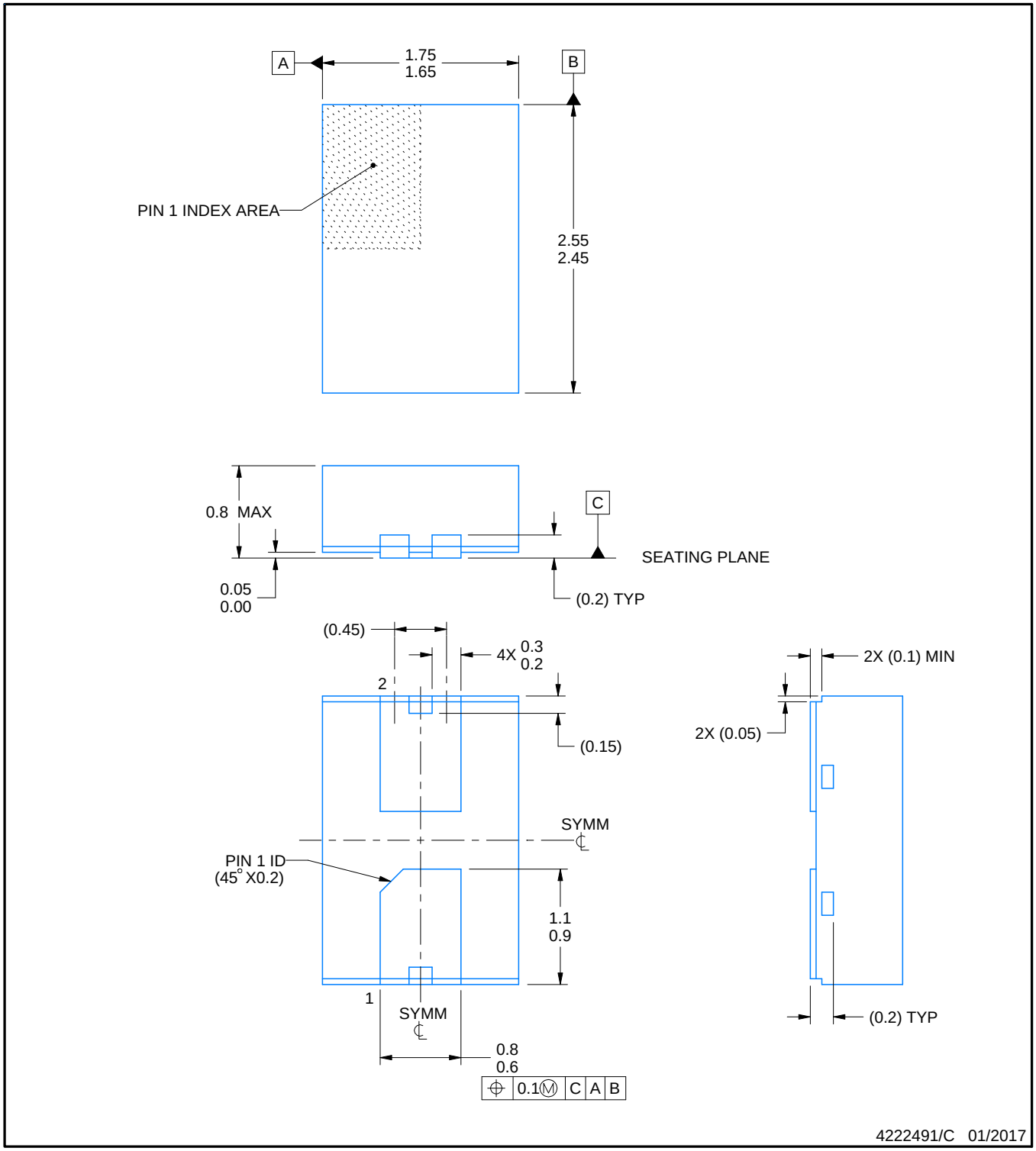

NOTES:

1. All linear dimensions are in millimeters. Any dimensions in parenthesis are for reference only. Dimensioning and tolerancing per ASME Y14.5M
2. This drawing is subject to change without notice.

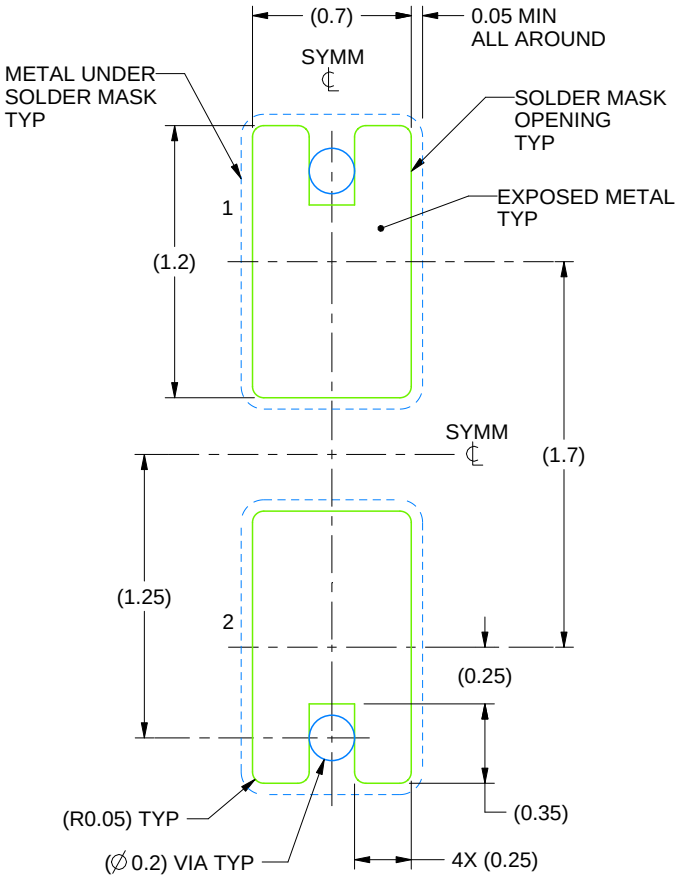

LAND PATTERN EXAMPLE
EXPOSED METAL SHOWN
SCALE:30X

4222491/C 01/2017

NOTES: (continued)

3. For more information, see Texas Instruments literature number SLUA271 (www.ti.com/lit/slua271).
4. Vias are optional depending on application, refer to device data sheet. If any vias are implemented, refer to their locations shown on this view. It is recommended that vias under paste be filled, plugged or tented.

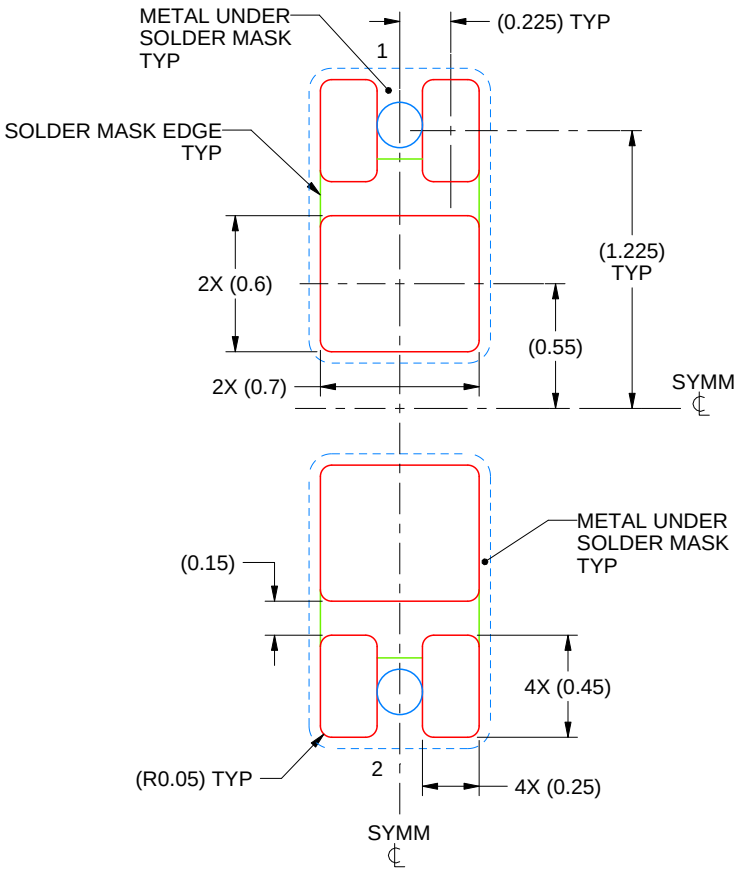

SOLDER PASTE EXAMPLE
BASED ON 0.1 mm THICK STENCIL

81% PRINTED SOLDER COVERAGE BY AREA UNDER PACKAGE
SCALE:30X

4222491/C 01/2017

NOTES: (continued)

5. Laser cutting apertures with trapezoidal walls and rounded corners may offer better paste release. IPC-7525 may have alternate design recommendations.

IMPORTANT NOTICE FOR TI DESIGN INFORMATION AND RESOURCES

Texas Instruments Incorporated ('TI") technical, application or other design advice, services or information, including, but not limited to, reference designs and materials relating to evaluation modules, (collectively, "TI Resources") are intended to assist designers who are developing applications that incorporate TI products; by downloading, accessing or using any particular TI Resource in any way, you (individually or, if you are acting on behalf of a company, your company) agree to use it solely for this purpose and subject to the terms of this Notice.

TI's provision of TI Resources does not expand or otherwise alter TI's applicable published warranties or warranty disclaimers for TI products, and no additional obligations or liabilities arise from TI providing such TI Resources. TI reserves the right to make corrections, enhancements, improvements and other changes to its TI Resources.

You understand and agree that you remain responsible for using your independent analysis, evaluation and judgment in designing your applications and that you have full and exclusive responsibility to assure the safety of your applications and compliance of your applications (and of all TI products used in or for your applications) with all applicable regulations, laws and other applicable requirements. You represent that, with respect to your applications, you have all the necessary expertise to create and implement safeguards that (1) anticipate dangerous consequences of failures, (2) monitor failures and their consequences, and (3) lessen the likelihood of failures that might cause harm and take appropriate actions. You agree that prior to using or distributing any applications that include TI products, you will thoroughly test such applications and the functionality of such TI products as used in such applications. TI has not conducted any testing other than that specifically described in the published documentation for a particular TI Resource.

You are authorized to use, copy and modify any individual TI Resource only in connection with the development of applications that include the TI product(s) identified in such TI Resource. NO OTHER LICENSE, EXPRESS OR IMPLIED, BY ESTOPPEL OR OTHERWISE TO ANY OTHER TI INTELLECTUAL PROPERTY RIGHT, AND NO LICENSE TO ANY TECHNOLOGY OR INTELLECTUAL PROPERTY RIGHT OF TI OR ANY THIRD PARTY IS GRANTED HEREIN, including but not limited to any patent right, copyright, mask work right, or other intellectual property right relating to any combination, machine, or process in which TI products or services are used. Information regarding or referencing third-party products or services does not constitute a license to use such products or services, or a warranty or endorsement thereof. Use of TI Resources may require a license from a third party under the patents or other intellectual property of the third party, or a license from TI under the patents or other intellectual property of TI.

TI RESOURCES ARE PROVIDED "AS IS" AND WITH ALL FAULTS. TI DISCLAIMS ALL OTHER WARRANTIES OR REPRESENTATIONS, EXPRESS OR IMPLIED, REGARDING TI RESOURCES OR USE THEREOF, INCLUDING BUT NOT LIMITED TO ACCURACY OR COMPLETENESS, TITLE, ANY EPIDEMIC FAILURE WARRANTY AND ANY IMPLIED WARRANTIES OF MERCHANTABILITY, FITNESS FOR A PARTICULAR PURPOSE, AND NON-INFRINGEMENT OF ANY THIRD PARTY INTELLECTUAL PROPERTY RIGHTS.

TI SHALL NOT BE LIABLE FOR AND SHALL NOT DEFEND OR INDEMNIFY YOU AGAINST ANY CLAIM, INCLUDING BUT NOT LIMITED TO ANY INFRINGEMENT CLAIM THAT RELATES TO OR IS BASED ON ANY COMBINATION OF PRODUCTS EVEN IF DESCRIBED IN TI RESOURCES OR OTHERWISE. IN NO EVENT SHALL TI BE LIABLE FOR ANY ACTUAL, DIRECT, SPECIAL, COLLATERAL, INDIRECT, PUNITIVE, INCIDENTAL, CONSEQUENTIAL OR EXEMPLARY DAMAGES IN CONNECTION WITH OR ARISING OUT OF TI RESOURCES OR USE THEREOF, AND REGARDLESS OF WHETHER TI HAS BEEN ADVISED OF THE POSSIBILITY OF SUCH DAMAGES.

You agree to fully indemnify TI and its representatives against any damages, costs, losses, and/or liabilities arising out of your non-compliance with the terms and provisions of this Notice.

This Notice applies to TI Resources. Additional terms apply to the use and purchase of certain types of materials, TI products and services. These include; without limitation, TI's standard terms for semiconductor products http://www.ti.com/sc/docs/stdterms.htm), evaluation modules, and samples (http://www.ti.com/sc/docs/sampterms.htm).

Mailing Address: Texas Instruments, Post Office Box 655303, Dallas, Texas 75265
Copyright © 2017, Texas Instruments Incorporated