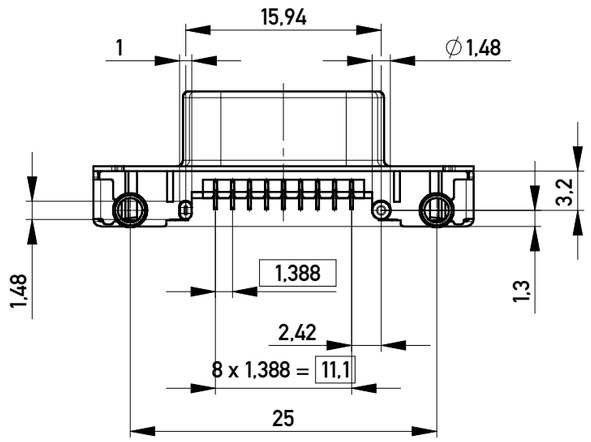

Anwendungsbeispiel
example of use

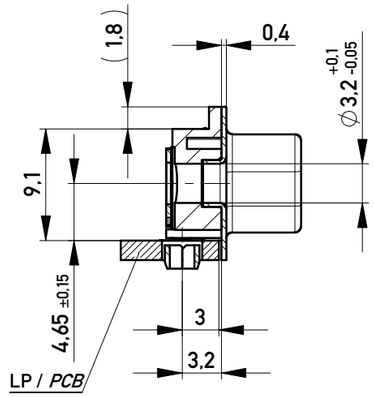

Verpackt im Gurt in Anlehnung an DIN IEC 60286-3
Tape on Reel Packaging according to DIN IEC 60286-3
Vorlaufband 400 mm / Nachlaufband 160 mm
Leader 400 mm / Trailer 160 mm
Verpackungseinheit: 200 Stück
Packaging unit: 200 pcs

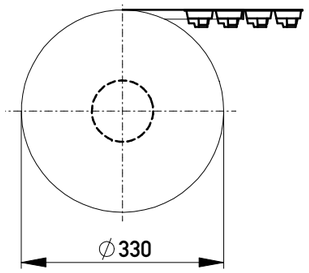

Abspulrichtung - *Reel off Direction*

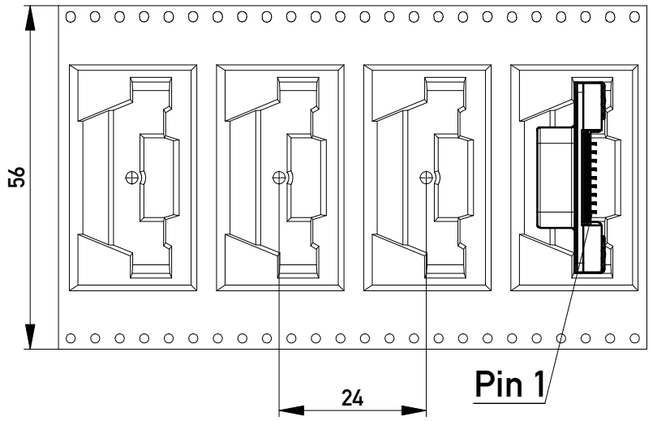

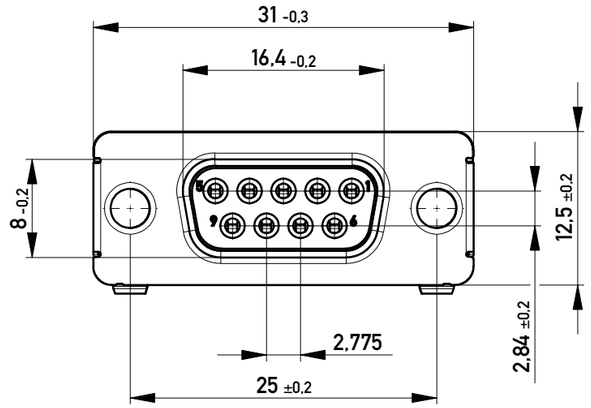

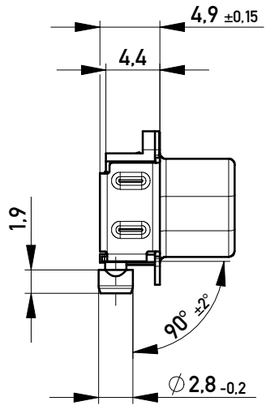

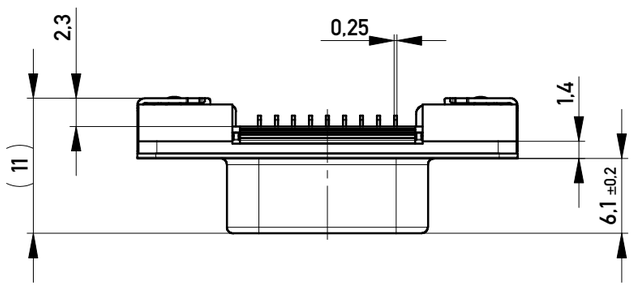

Layoutvorschlag
recommended layout

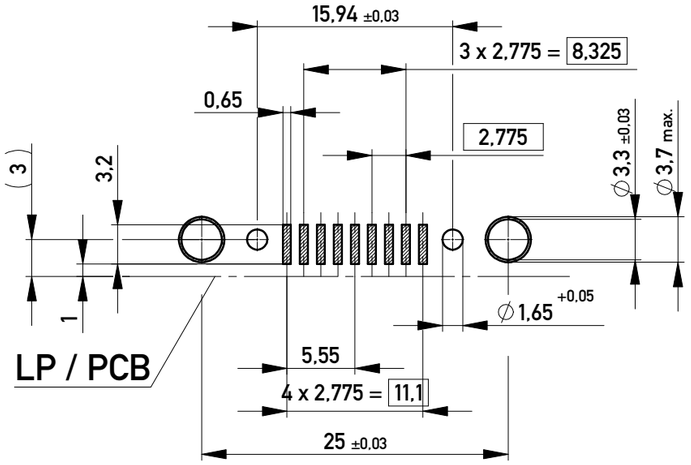

Fehlende Masse und Angaben siehe DIN 41652 / *Missing information and dimensions according to DIN 41652*
Sonstige Angaben siehe Fertigungsunterlagen / *Additional indications according to production documentation*

Anschlussbereich verzinnt
terminal area tin plating

Koplanarität der Anschlüsse ≤ 0,1 mm
coplanarity area of termination ≤ 0,1 mm

Anforderungsstufe: 2
class: 2

Information:	Tolerances	All Dimensions in mm	Scale 2:1
All rights reserved. Only for Information. To ensure that this is the latest version of this drawing, please contact one of the ERNI companies before using.	Subject to modification without prior notice. Drawing will not be updated.		Designation TMC-S-09-SMD-Slim_Line-BA8 *TMC-S-09-SMD-Slim Line-BA8*
		www.ERNI.com	100202620003 K A3
Index	Date		Class TMCS

Copyright by ERNI Production GmbH & Co. KG
Proprietary notice pursuant to ISO 16016 to be observed.