Continental Device India Limited

An ISO/TS 16949, ISO 9001 and ISO 14001 Certified Company

SILIICON PLANAR ZENER DIODE

CMBZ 5225B to CMBZ5229B SOT-23

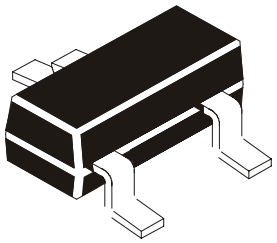

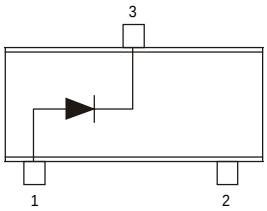

Pin Configuration
1 = ANODE
2 = NC
3 = CATHODE

General Purpose Zener Diode

ABSOLUTE MAXIMUM RATINGS(Tamb=25deg C)

DESCRIPTION	SYMBOL	VALUE	UNIT
Power Dissipation	Ptot	225	mW
Junction Temperature	TJ	150	dec C
Storage Temperature	Tstg	-55-150	dec C

(1) On infinite heatsink with 4mm Lead Length

ELECTRICAL CHARACTERISTICS (Tamb=25 deg C) VF <0.9V @ 10mA

Device	Zener Voltage* VZ(+-5%) nom (V)	rZT max (ohm)	IZT (mA)	rZK max (ohm)	IZK (mA)	IR max (uA)	VR (V)	MARKING
CMBZ5225B	3.0	29	20	1600	0.25	50	1.0	18E
CMBZ5226B	3.3	28	20	1600	0.25	25	1.0	8A
CMBZ5227B	3.6	24	20	1700	0.25	15	1.0	8B
CMBZ5228B	3.9	23	20	1900	0.25	10	1.0	8C
CMBZ5229B	4.3	22	20	2000	0.25	5.0	1.0	8D

*** Zener Voltage is measured after 40ms from the start of operating**

SOT-23 Formed SMD Package

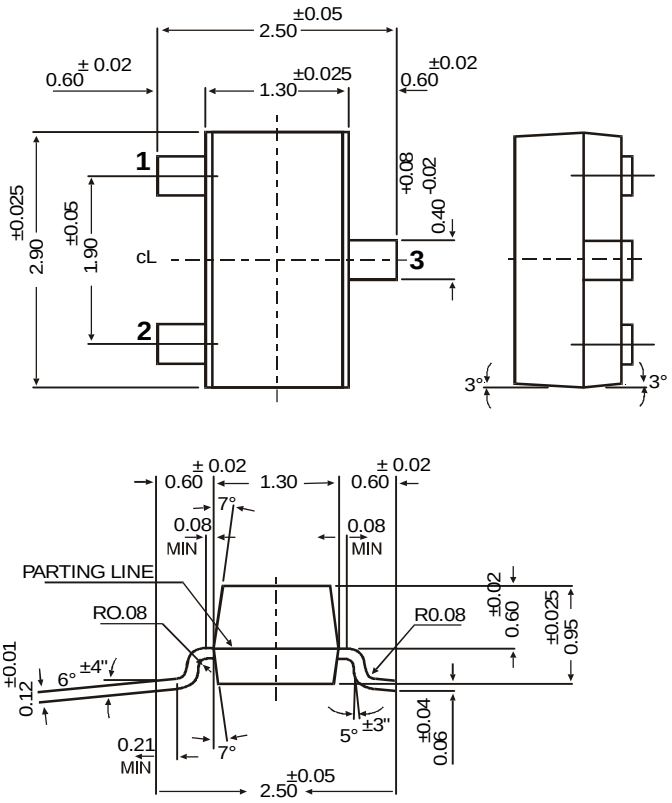

SOT-23 Package Reel Information

Reel specifications for W" Packing (13" reel)

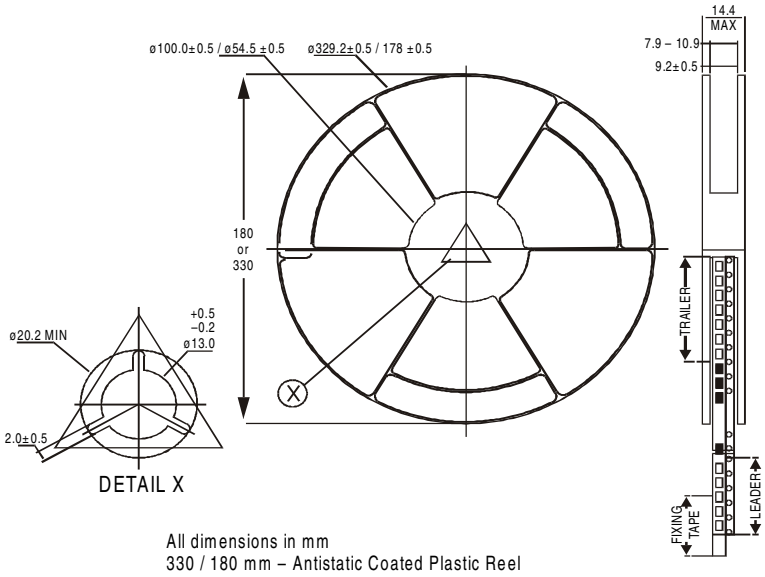

All dimensions in mm
330 / 180 mm – Antistatic Coated Plastic Reel

NOTES:

	8mm Tape Size of Reel 330 mm (13")	8mm Tape Size of Reel 180 mm (7")
No. of Devices	10,000 Pcs	3,000 Pcs

1. The bandolier of 330 mm reel contains at least 10,000 devices.
2. The bandolier of 180 mm reel contains at least 3,000 devices.
3. No more than 0.5% missing devices / reel. 50 empty compartments for 330 mm reel. 15 empty compartments for 180 mm reel.
4. Three consecutive empty places might be found provided this gap is followed by 6 consecutive devices.
5. The carrier tape (leader) starts with at least 75 empty positions (equivalent to 330 mm). In order to fix the carrier tape a self adhesive tape of 20 to 50 mm is applied. At the end of the bandolier at least 40 empty positions (equivalent to 160 mm) are there.

Tape Specification for SOT-23 Surface Mount Device

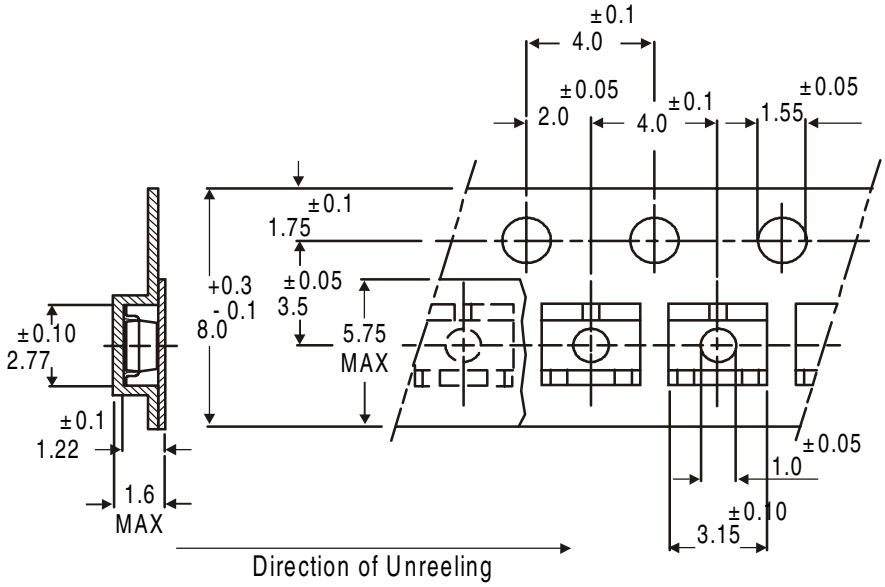

All dimensions in mm

Packing Detail

PACKAGE	STANDARD PACK		INNER CARTON BOX		OUTER CARTON BOX		
	Details	Net Weight/Qty	Size	Qty	Size	Qty	Gr Wt
SOT-23 T&R	3K/reel	136 gm/3K pcs	3" x 7.5" x 7.5"	12.0K	17" x 15" x 13.5"	192.0K	12 kgs
			9" x 9" x 9"	51.0K	19" x 19" x 19"	408.0K	28 kgs
	10K/reel	415 gm/10K pcs	13" x 13" x 0.5"	10.0K	17" x 15" x 13.5"	300.0K	16 kgs

Notes

Disclaimer

The product information and the selection guides facilitate selection of the CDIL's Discrete Semiconductor Device(s) best suited for application in your product(s) as per your requirement. It is recommended that you completely review our Data Sheet(s) so as to confirm that the Device(s) meet functionality parameters for your application. The information furnished on the CDIL Web Site/CD is believed to be accurate and reliable. CDIL however, does not assume responsibility for inaccuracies or incomplete information. Furthermore, CDIL does not assume liability whatsoever, arising out of the application or use of any CDIL product; neither does it convey any license under its patent rights nor rights of others. These products are not designed for use in life saving/support appliances or systems. CDIL customers selling these products (either as individual Discrete Semiconductor Devices or incorporated in their end products), in any life saving/support appliances or systems or applications do so at their own risk and CDIL will not be responsible for any damages resulting from such sale(s).

CDIL strives for continuous improvement and reserves the right to change the specifications of its products without prior notice.

CDIL is a registered Trademark of

Continental Device India Limited

C-120 Naraina Industrial Area, New Delhi 110 028, India.

Telephone + 91-11-579 6150 Fax + 91-11-579 9569, 579 5290

e-mail sales@cdil.com www.cdil.com