REV	ECN	CONTENT	CHECK	DATE
V0.0		ORIGINAL	LJ	2018.08.27

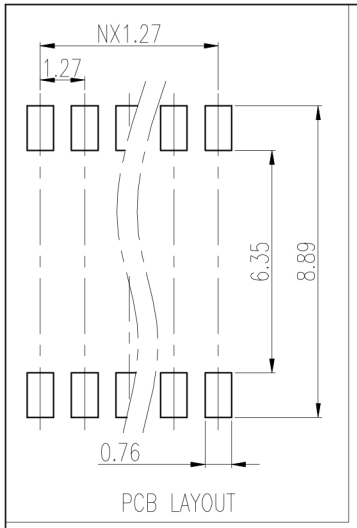

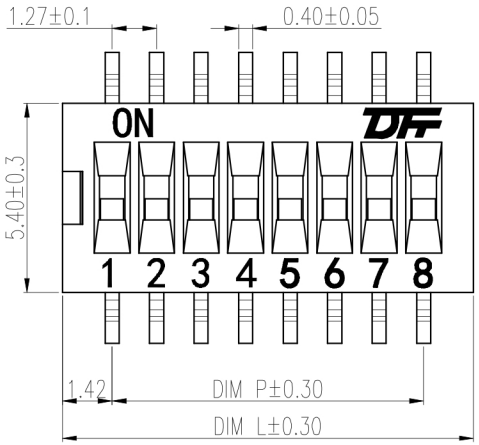

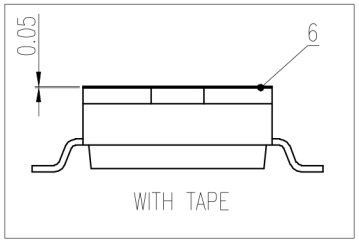

SPECIFICATION:

1. Rating:
   Switching: 25mA,24VDC
   Non-Switching: 100mA,50VDC
2. Contact Resistance:
   Initial: 50mΩmax
   After Life Test: 100mΩ max
3. Insulation Resistanct:100MΩ min/500 VDC
4. Withstand Voltage:300VAC for 1 minute
5. Operation Force:500g max
6. Travel:0.6mm
7. Mechanical Life:min 2000 cycles
8. Electrical Life:min 1000 cycles/25mA,24VDC
9. Operation Temperature: -40℃~+85℃
10. Storage Temperature: -40℃~+85℃
11. RoHS Compliance

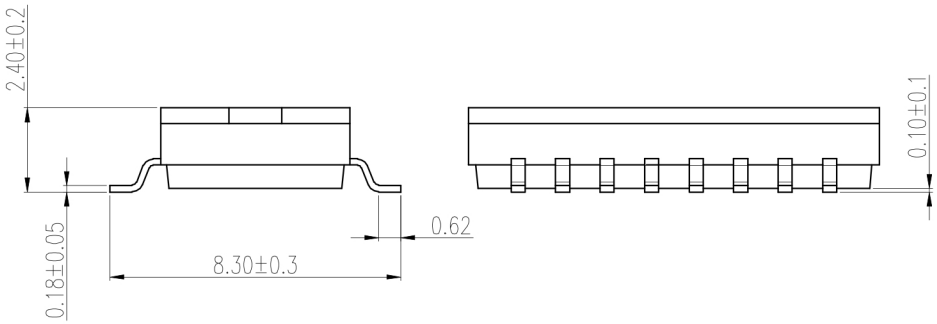

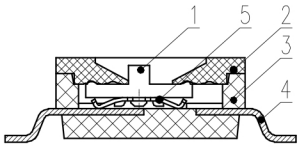

SOLDERING INFORMATION:

Reflow Soldering: 260℃(Peak Temperature), 240℃~260℃,20S max

Manual Soldering: 30W iron,320±5℃, 3S max

Keep in "off" position during soldering

ITEM	NAME OF PART	NO. OF PART	Q'TY	MATERIAL	NOTE
6	Tape(T=0.05)	XXXX	1	Polyimide	Selectable
5	Spring	XXXX	P	Copper Alloy	Gold Plated
4	Pin	XXXX	2P	Copper Alloy	Gold Plated
3	Base	XXXX	1	Thermoplastic	UL94V-0
2	Cover	XXXX	1	Thermoplastic	UL94V-0
1	Actuator	XXXX	P	Thermoplastic	UL94V-0

HOW TO ORDER

KF1028- XXP- XX -XXX-XXX

Series

Positions

Special number

Package:

00:tube (without tape)

TR:tape&reel (with tape)

SCHEMATIC

(1,2,3,4,.....,12POS AVAIL)

POLE	Dim P	Dim L
2P	1.27	4.11
3P	2.54	5.38
4P	3.81	6.65
5P	5.08	7.92
6P	6.35	9.19
7P	7.62	10.46
8P	8.89	11.73
9P	10.16	13.00
10P	11.43	14.27
11P	12.70	15.54
12P	13.97	16.81

General tolerance in mm						radii and chamfers			shorter angle side			⌯	— //		
over 0.5 to 3	over 3 to 6	over 6 to 30	over 30 to 120	over 120 to 400	over 400 to 1000	over 0.5 to 3	over 3 to 6	over 6	up to 10	over 10 to 50	over 50 to 120	all	over 0 to 100	over 100 to 150	over 150
±0.15	±0.2	±0.25	±0.3	±0.5	±0.8	±0.2	±0.5	±1.0	±1°	±30′	±20′	0.5	0.2	0.3	0.5

APP.		DATE		NAME	KF1028-XXP-XX-DFT-XXX		
CHK.		DATE					
DWG.		DATE		DWGNO.	W20000072		
UNITS	MM	SCALE	1:1	SHEET	1/1	PROJECTION-METHOD	

DFF® 慈溪市凯峰电子有限公司

CIXI KAIFENG ELECTRONICS CO.,LTD