CUI DEVICES

SERIES: CP110 | DESCRIPTION: PELTIER MODULE

FEATURES

- arcTEC structure
- enhanced reliability for high thermal cycling
- superior thermal performance
- silicon sealed
- wide ΔT max
- precise temperature control
- solid state construction

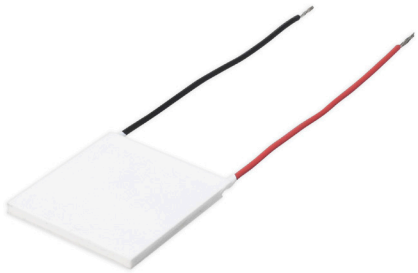

RoHS

MODEL	input voltage[1] max (Vdc)	input current[2] max (A)	internal resistance[3] typ (Ω±10%)	output Qmax[4] T_h=27°C (W)	output Qmax[4] T_h=50°C (W)	output ΔTmax[5] T_h=27°C (°C)	output ΔTmax[5] T_h=50°C (°C)
CP1130325	11.8	11.0	0.9	74.7	82	68	75
CP1140203	7.6	11.0	0.53	48	52	70	77
CP11404432	24.1	11.0	1.65	156	171	70	77
CP115559405	24.6	11.0	1.66	154	169	70	77

Notes:
1. Maximum voltage at ΔT max and T_h=27°C
2. Maximum current to achieve ΔT max
3. Measured by AC 4-terminal method at 25°C
4. Maximum heat absorbed at cold side occurs at I_{max}, V_{max}, and ΔT=0°C
5. Maximum temperature difference occurs at I_{max}, V_{max}, and Q=0W (ΔT max measured in a vacuum at 1.3 Pa)

SPECIFICATIONS

parameter	conditions/description	min	typ	max	units
solder melting temperature	connection between thermoelectric pairs	235			°C
assembly compression				1	MPa
RoHS	yes				

MECHANICAL DRAWING

units: mm

	MATERIAL	PLATING
ceramic plate	96% AL_2O_3	
wire leads (CP1140203)	22 AWG	tin
wire leads (CP115559405)	18 AWG	tin
wire leads (all other models)	20 AWG	tin
sealer	silicon rubber 703 RTV (between cold and hot side plates)	
joint cover	silicon rubber 703 RTV	
marking	P/N & S/N printed on cold side surface	

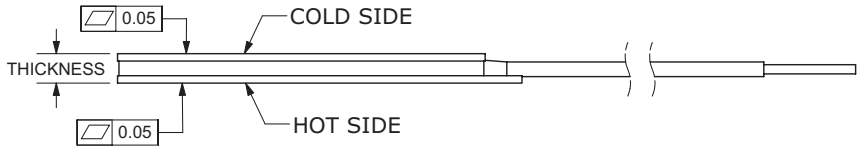

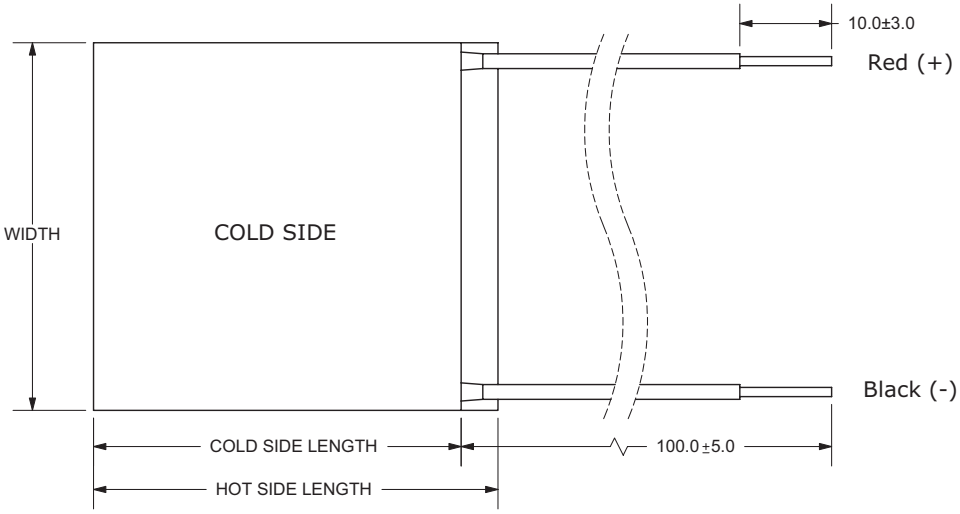

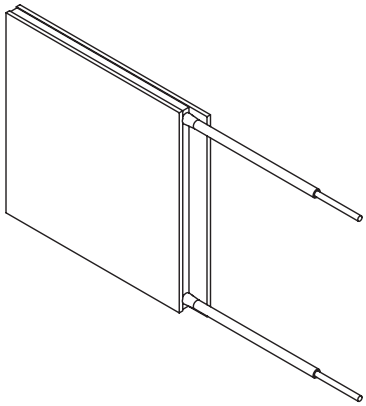

MODEL NO.	HOT SIDE LENGTH (mm)	COLD SIDE LENGTH (mm)	WIDTH (mm)	THICKNESS (mm)
CP1130325	30 ±0.3	30 ±0.3	30 ±0.3	3.25 ±0.025
CP1140203	40 ±0.3	40 ±0.3	20 ±0.3	3.0 ±0.05
CP11404432	44 ±0.3	40 ±0.3	40 ±0.3	3.2 ±0.1
CP115559405	59 ±0.3	55 ±0.3	55 ±0.3	4.05 ±0.1

CP1130325 PERFORMANCE (Th=27°C)

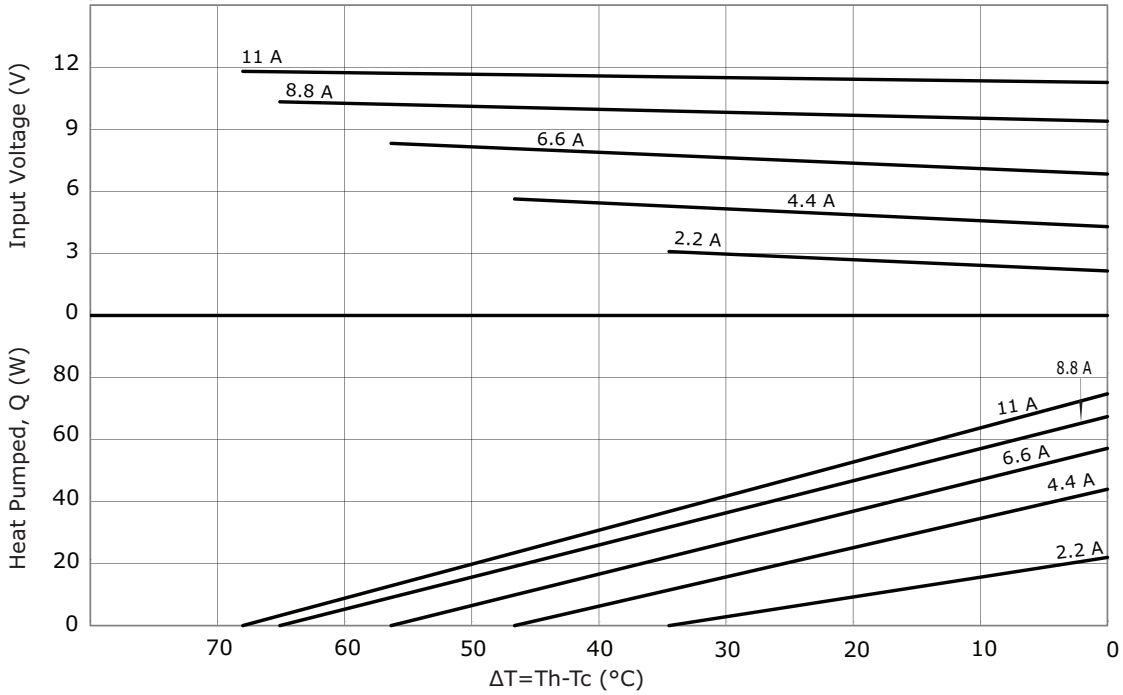

CP1130325 PERFORMANCE (Th=50°C)

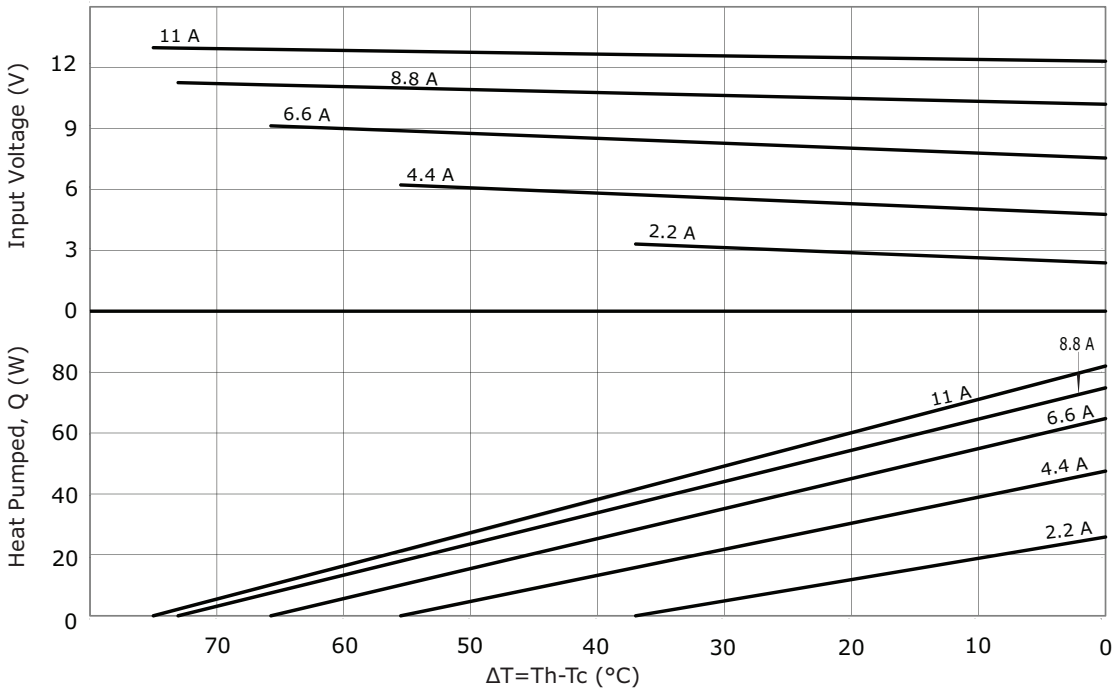

CP1140203 PERFORMANCE (Th=27°C)

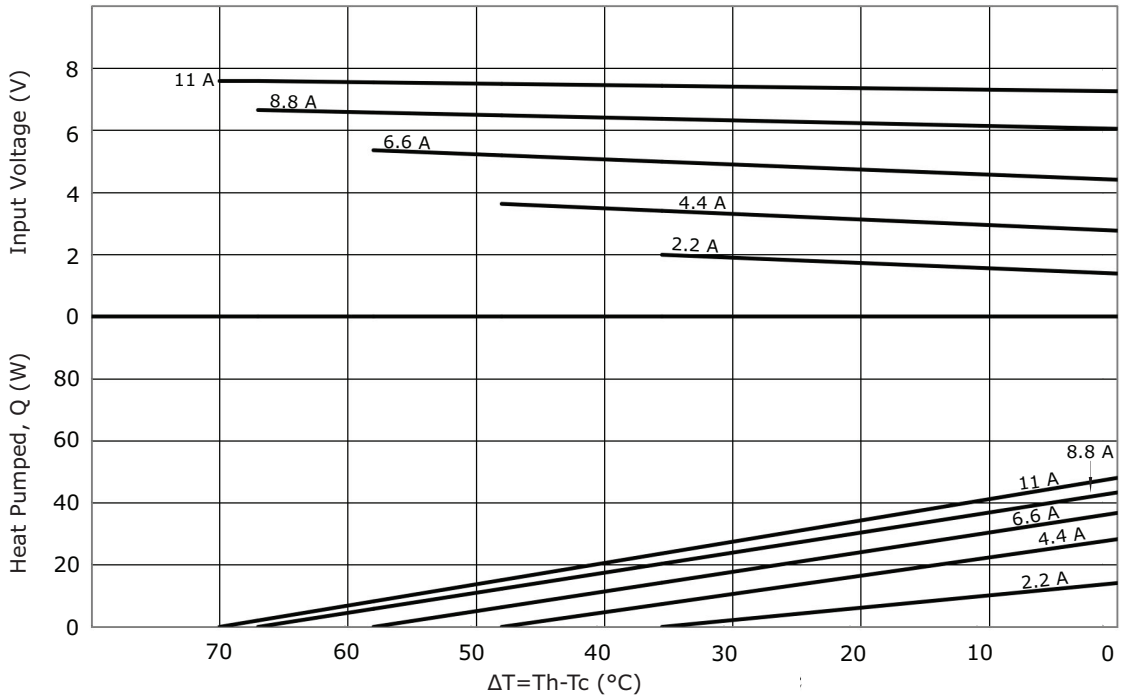

CP1140203 PERFORMANCE (Th=50°C)

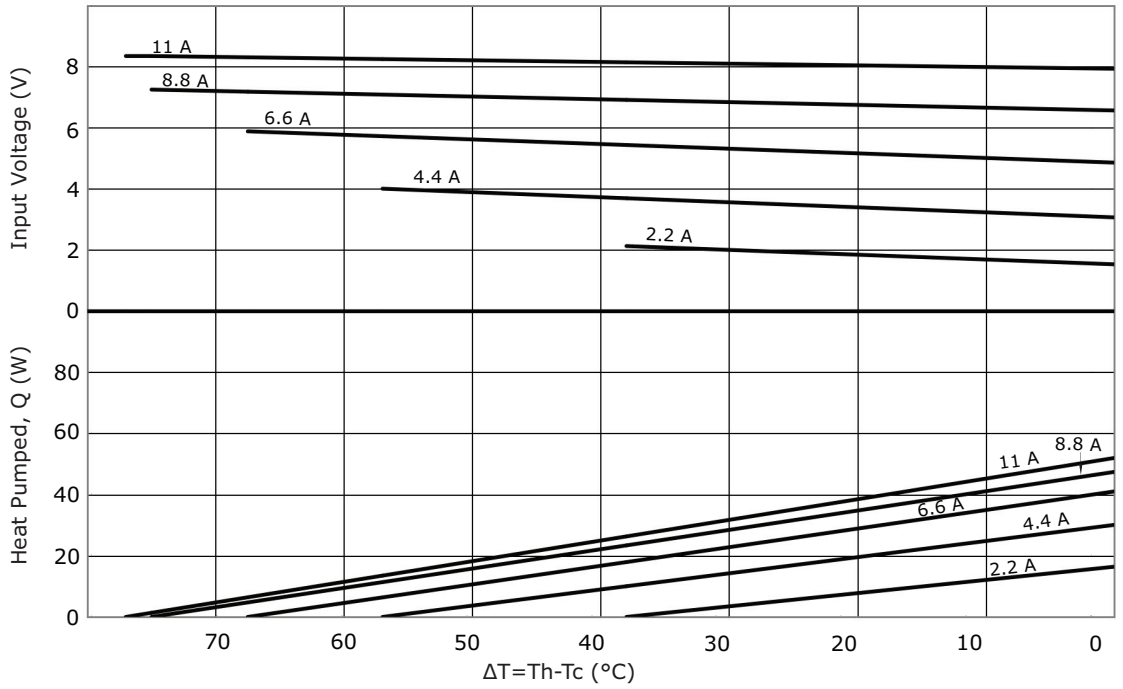

CP11404432 PERFORMANCE (Th=27°C)

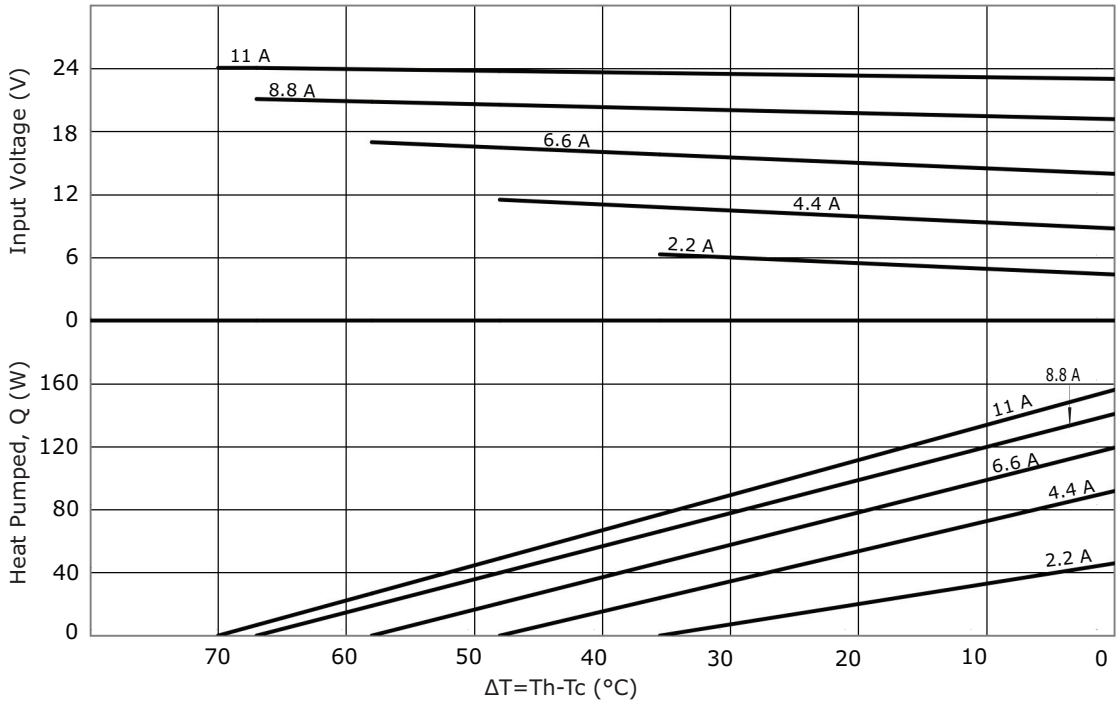

CP11404432 PERFORMANCE (Th=50°C)

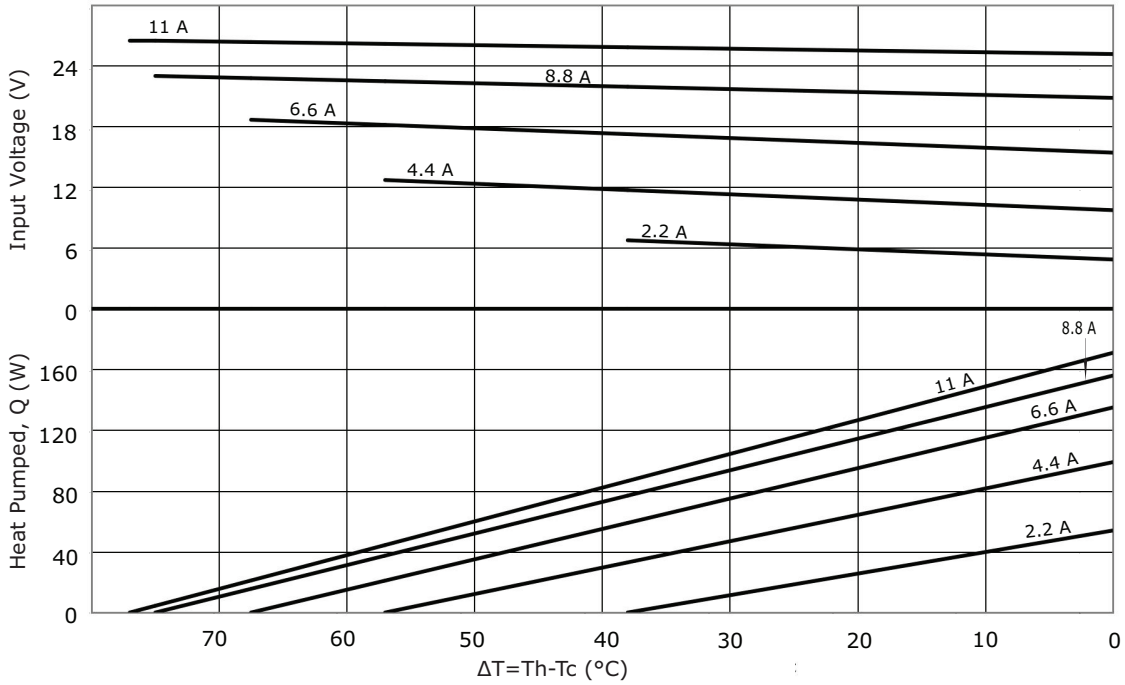

CP115559405 PERFORMANCE (Th=27°C)

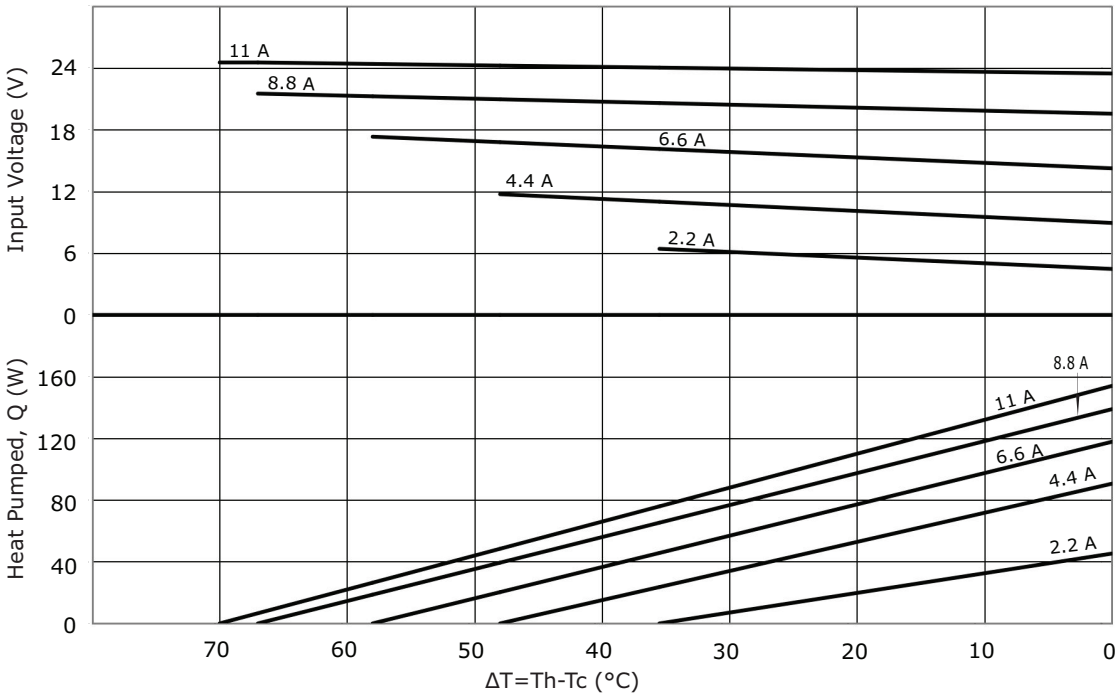

CP115559405 PERFORMANCE (Th=50°C)

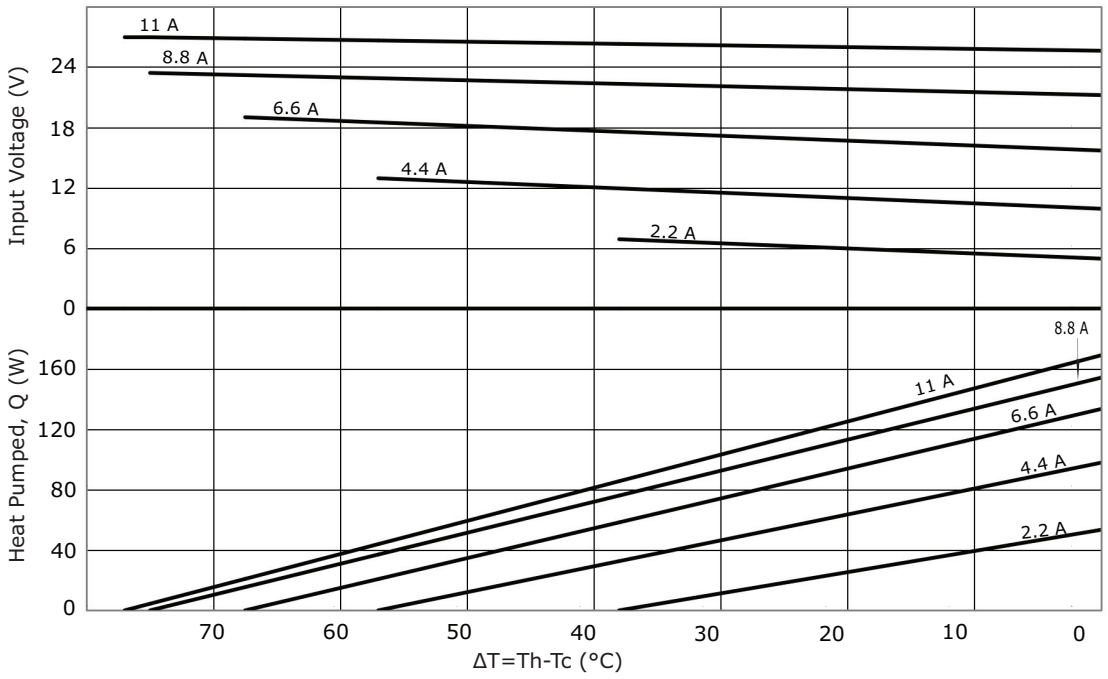

REVISION HISTORY

rev.	description	date
1.0	initial release	11/05/2019

The revision history provided is for informational purposes only and is believed to be accurate.

CUI DEVICES

CUI Devices offers a one (1) year limited warranty. Complete warranty information is listed on our website.

CUI Devices reserves the right to make changes to the product at any time without notice. Information provided by CUI Devices is believed to be accurate and reliable. However, no responsibility is assumed by CUI Devices for its use, nor for any infringements of patents or other rights of third parties which may result from its use.

CUI Devices products are not authorized or warranted for use as critical components in equipment that requires an extremely high level of reliability. A critical component is any component of a life support device or system whose failure to perform can be reasonably expected to cause the failure of the life support device or system, or to affect its safety or effectiveness.