SUPER®

X9SPU-F

USER'S MANUAL

Revision 1.0b

The information in this User's Manual has been carefully reviewed and is believed to be accurate. The vendor assumes no responsibility for any inaccuracies that may be contained in this document, makes no commitment to update or to keep current the information in this manual, or to notify any person or organization of the updates. **Please Note: For the most up-to-date version of this manual, please see our web site at www.supermicro.com.**

Super Micro Computer, Inc. ("Supermicro") reserves the right to make changes to the product described in this manual at any time and without notice. This product, including software and documentation, is the property of Supermicro and/or its licensors, and is supplied only under a license. Any use or reproduction of this product is not allowed, except as expressly permitted by the terms of said license.

IN NO EVENT WILL SUPER MICRO COMPUTER, INC. BE LIABLE FOR DIRECT, INDIRECT, SPECIAL, INCIDENTAL, SPECULATIVE OR CONSEQUENTIAL DAMAGES ARISING FROM THE USE OR INABILITY TO USE THIS PRODUCT OR DOCUMENTATION, EVEN IF ADVISED OF THE POSSIBILITY OF SUCH DAMAGES. IN PARTICULAR, SUPER MICRO COMPUTER, INC. SHALL NOT HAVE LIABILITY FOR ANY HARDWARE, SOFTWARE, OR DATA STORED OR USED WITH THE PRODUCT, INCLUDING THE COSTS OF REPAIRING, REPLACING, INTEGRATING, INSTALLING OR RECOVERING SUCH HARDWARE, SOFTWARE, OR DATA.

Any disputes arising between manufacturer and customer shall be governed by the laws of Santa Clara County in the State of California, USA. The State of California, County of Santa Clara shall be the exclusive venue for the resolution of any such disputes. Supermicro's total liability for all claims will not exceed the price paid for the hardware product.

FCC Statement: This equipment has been tested and found to comply with the limits for a Class B digital device pursuant to Part 15 of the FCC Rules. These limits are designed to provide reasonable protection against harmful interference in a residential installation. This equipment generates, uses, and can radiate radio frequency energy and, if not installed and used in accordance with the manufacturer's instruction manual, may cause interference with radio communications. However, there is no guarantee that interference will not occur in a particular installation. If this equipment does cause harmful interference to radio or television reception, which can be determined by turning the equipment off and on, you are encouraged to try to correct the interference by one or more of the following measures:

- Reorient or relocate the receiving antenna.
- Increase the separation between the equipment and the receiver.
- Connect the equipment into an outlet on a circuit different from that to which the receiver is connected.
- Consult the dealer or an experienced radio/television technician for help.

California Best Management Practices Regulations for Perchlorate Materials: This Perchlorate warning applies only to products containing CR (Manganese Dioxide) Lithium coin cells. "Perchlorate Material-special handling may apply. See www.dtsc.ca.gov/hazardouswaste/perchlorate".

WARNING: Handling of lead solder materials used in this product may expose you to lead, a chemical known to the State of California to cause birth defects and other reproductive harm.

Manual Revision 1.0b

Release Date: November 17, 2016

Unless you request and receive written permission from Super Micro Computer, Inc., you may not copy any part of this document. Information in this document is subject to change without notice. Other products and companies referred to herein are trademarks or registered trademarks of their respective companies or mark holders.

Copyright © 2016 by Super Micro Computer, Inc. All rights reserved.
Printed in the United States of America

Preface

This manual is written for system integrators, PC technicians and knowledgeable PC users. It provides information for the installation and use of the SUPERO® X9SPU-F motherboard.

About This Motherboard

The SUPERO® X9SPU-F Motherboard supports a single Intel® Xeon E3-1200 v2 processor family and Gen-2 Core-i3 (LGA 1155) processors. It is also backward compatible with Xeon E3-1200 processors.

With the Intel® C216 series chipset built in, the X9SPU-F Motherboard offers exceptional system performance using Supermicro's unique Universal I/O (UIO) form factor. Features such as two SATA 3 ports, four SATA 2 ports, support for up to 32GB of memory, RAID 0, 1, 5, 10 support, dual 1Gb LAN, TPM support and eight USB ports make the X9SPU-F series ideal for server platforms.

Please refer to our website (http://www.supermicro.com/products/) for processor and memory support updates.

*This product is intended to be installed and serviced by professional technicians.

Manual Organization

Chapter 1 describes the features, specifications and performance of the motherboard, and provides detailed information on the Intel Patsburg chipset.

Chapter 2 provides hardware installation instructions. Read this chapter when installing the processor, memory modules and other hardware components into the system. If you encounter any problems, see **Chapter 3**, which describes troubleshooting procedures for video, memory and system setup stored in the CMOS.

Chapter 4 includes an introduction to the BIOS, and provides detailed information on running the CMOS Setup utility.

Appendix A provides BIOS Error Beep Codes.

Appendix B lists software program installation instructions**.**

Appendix C contains the UEFI BIOS Recovery instructions.

Conventions Used in the Manual:

Special attention should be given to the following symbols for proper installation and to prevent damage done to the components or injury to yourself:

Danger/Caution: Instructions to be strictly followed to prevent catastrophic system failure or to avoid bodily injury

Warning: Critical information to prevent damage to the components or data loss.

Important: Important information given to ensure proper system installation or to relay safety precautions.

Note: Additional Information given to differentiate various models or provides information for correct system setup.

Contacting Supermicro

Headquarters

Address:	Super Micro Computer, Inc.
	980 Rock Ave.
	San Jose, CA 95131 U.S.A.
Tel:	+1 (408) 503-8000
Fax:	+1 (408) 503-8008
Email:	marketing@supermicro.com (General Information)
	support@supermicro.com (Technical Support)
Web Site:	www.supermicro.com

Europe

Address:	Super Micro Computer B.V.
	Het Sterrenbeeld 28, 5215 ML
	's-Hertogenbosch, The Netherlands
Tel:	+31 (0) 73-6400390
Fax:	+31 (0) 73-6416525
Email:	sales@supermicro.nl (General Information)
	support@supermicro.nl (Technical Support)
	rma@supermicro.nl (Customer Support)

Asia-Pacific

Address:	Super Micro Computer, Inc.
	4F, No. 232-1, Liancheng Rd.
	Chung-Ho 235, Taipei County
	Taiwan, R.O.C.
Tel:	+886-(2) 8226-3990
Fax:	+886-(2) 8226-3991
Web Site:	www.supermicro.com.tw
Technical Support:	
Email:	support@supermicro.com.tw
Tel:	+886-(2) 8226-5990

Table of Contents

Preface

About This Motherboard iii
Manual Organization iii
Conventions Used in the Manual: iv
Contacting Supermicro v

Chapter 1

Introduction

1-1 Overview 1-1
Checklist 1-1
Motherboard Features 1-7
1-2 Chipset Overview 1-10
Intel C216 Chipset Features 1-10
1-3 Special Features 1-11
Recovery from AC Power Loss 1-11
1-4 PC Health Monitoring 1-11
Fan Status Monitor with Firmware Control 1-11
Environmental Temperature Control 1-11
System Resource Alert 1-12
1-5 ACPI Features 1-12
Slow Blinking LED for Suspend-State Indicator 1-12
1-6 Power Supply 1-12
1-7 Super I/O 1-13

Chapter 2 Installation

2-1 Static-Sensitive Devices 2-1
Precautions 2-1
Unpacking 2-1
2-2 Processor and Heatsink Installation 2-2
Installing the LGA1155 Processor 2-2
Installing a Passive CPU Heatsink 2-5
Removing the Heatsink 2-6
2-3 Installing DDR3 Memory 2-7
DIMM Installation 2-7
Removing Memory Modules 2-7
Memory Support 2-8
Memory Population Guidelines 2-8

Memory Population Guidelines 2-9
2-4 Motherboard Installation 2-10
Tools Needed 2-10
Location of Mounting Holes 2-10
Installing the Motherboard 2-11
2-5 Connectors/IO Ports 2-12
Motherboard I/O Back panel 2-12
Universal Serial Bus (USB) 2-13
Ethernet Ports (LAN1/LAN2) 2-14
IPMI Port (IPMI) 2-14
Unit Identifier Switch (UID) 2-14
VGA Connector (VGA) 2-15
Serial Ports 2-15
Front Control Panel 2-16
Front Control Panel Pin Definitions 2-17
Power LED 2-17
HDD LED 2-17
Power Fail LED 2-17
NIC1/NIC2 (LAN1/LAN2) 2-18
Unit ID LED (Front Panel) / OH / Fan Failure 2-18
NMI Button 2-19
Reset Button 2-19
Power Button 2-19
2-6 Connecting Cables & Optional Devices 2-20
ATX Main PWR (JPW1) & GPU PWR Connectors (JPW2) 2-20
Fan Headers (FAN1~5) 2-21
Chassis Intrusion (JL1) 2-21
Legacy Wake-On-LAN Header (JSTBY1) 2-22
Power Supply I2C (JPI2C2) 2-22
DOM PWR Connector (JSD1) 2-23
TPM Header (JTPM) 2-23
T-SGPIO1~2 Headers (T-SGPIO) 2-24
External Power LED (JLED) 2-24
Internal Buzzer (SPEAKER) 2-25
Speaker (JSPK) 2-25
Internal Battery (BAT) 2-25
2-7 Jumper Settings 2-26
Explanation of Jumpers 2-26

LAN Port Enable/Disable (JPL1/JPL2) 2-26
Clear CMOS (JBT1) 2-27
PCI Slot SMB Enable (JI2C2/JI2C3) 2-27
BIOS EEPROM Power (J29) 2-27
Watch Dog Reset (JWD) 2-28
VGA Enable (JPG1) 2-28
BMC Enable/Disable (JPB) 2-29
USB Wake-Up (JPUSB1) 2-29
ME Recovery (JPME1) 2-30
ME Manufacturing Mode 2-30
x16 PCI Setting (JRF1) 2-30
2-8 Onboard Indicators 2-31
LAN Port LEDs 2-31
Standby Power (LE4) 2-31
IPMI Heartbeat LED (LE7) 2-32
Unit ID LED (LE5) 2-32
2-9 SATA Connections 2-33
SATA Connections (I-SATA0~5) 2-33
2-10 Expansion Slots 2-34
Universal I/O Slot (UIO RISER) 2-34
PCI-E 2.0 x4 Slot (SBX2) 2-34
PCI-E 3.0 x16 and PCI-E 2.0 x4 Slot (SBX1 and SBX3) 2-34

Chapter 3 Troubleshooting

3-1 Troubleshooting Procedures 3-1
Before Power On 3-1
No Power 3-1
No Video 3-2
Memory Errors 3-2
When You Lose the System's Setup Configuration 3-2
3-2 Technical Support Procedures 3-3
3-3 Frequently Asked Questions 3-4
3-4 Battery Removal and Installation 3-6
Battery Removal 3-6
Proper Battery Disposal 3-6
Battery Installation 3-6
3-5 Returning Merchandise for Service 3-7

Chapter 4 BIOS

4-1 Introduction 4-1

Starting BIOS Setup Utility 4-1
How To Change the Configuration Data 4-1
How to Start the Setup Utility 4-2
4-2 Main Setup 4-2
System Overview: The following BIOS information will be displayed: 4-3
System Time/System Date 4-3
Supermicro X9SPU-F 4-3
Processor 4-3
System Memory 4-3
4-3 Advanced Setup Configurations 4-4
▶BOOT Feature 4-4
Quiet Boot 4-4
AddOn ROM Display Mode 4-4
Bootup Num-Lock 4-4
Wait For 'F1' If Error 4-5
Interrupt 19 Capture 4-5
Watch Dog Function 4-5
Power Button Function 4-5
Restore on AC Power Loss 4-5
DeepSx Power Policies 4-5
▶Processor and Clock Options 4-5
CPU Configuration 4-6
Clock Spread Spectrum 4-6
Hardware Prefetcher (Available when supported by the CPU) 4-6
Adjacent Cache Line Prefetch (Available when supported by the CPU) 4-6
Intel® Virtualization Technology (Available when supported by the CPU) 4-6
Execute-Disable Bit Capability (Available when supported by the OS and the CPU) 4-6
Intel® AES-NI 4-6
Intel® Hyper Threading Technology 4-6
Active Processor Cores 4-7
Power Technology 4-7
EIST 4-7
CPU C3 Report, CPU C6, Report, CPU C7 Report 4-7
C1E 4-7
▶Turbo Boost Technology 4-7
Turbo Mode 4-7
▶Chipset Configuration 4-8

▶IDE/SATA Configuration 4-9
SATA Mode 4-9
IDE Mode 4-9
Serial ATA Port 0~5 4-9
AHCI Mode 4-10
Aggressive Link Power Management 4-10
Serial ATA Port 0~5 Hot Plug 4-10
Serial ATA Port 0~5 Staggered Spin Up 4-10
RAID Mode 4-10
Serial ATA Port 0~5 Hot Plug 4-10
▶PCIe/PCI/PnP Configuration 4-10
PCI Latency Timer 4-10
Above 4G Decoding 4-10
Onboard LAN Option ROM Select 4-10
Load Onboard LAN1 Option ROM / Load Onboard LAN2 Option ROM ..4-11
Boots Graphic Adapter Priority 4-11
▶Super IO Configuration 4-11
Serial Port 1 4-11
Serial Port 1 Settings 4-11
Serial Port 2 4-11
Serial Port 2 Settings 4-11
▶Serial Port Console Redirection 4-12
COM 1, COM2, SOL 4-12
Console Redirection 4-12
Serial Port for Out-of-Band Management/Windows Emergency Management Services (EMS) 4-13
Console Redirection (for EMS) 4-13
▶Hardware Health Configuration 4-14
Fan Speed Control Mode 4-14
CPU Temperature 4-15
System Temperature / Peripheral Temperature 4-15
Fan 1 ~ Fan 5 Speed 4-15
VCORE, 12V, VDIMM, 5VCC, -12V, AVCC, 3.3VCC, VSB, VBAT 4-15
▶ACPI Settings 4-15
High Precision Event Timers 4-15
WHEA Support 4-16
▶PCH-FW Configuration 4-16
MDES BIOS Status Code 4-16
▶Firmware Update Configuration 4-16

Me FW Image Re-Flash 4-16
▶Intel ICC 4-16
Use Watchdog Timer for ICC 4-16
Turn off unused PCI/PCIe clocks 4-16
Lock ICC registers 4-17
4-4 Event Logs 4-17
▶Change SmBIOS Event Log Settings 4-17
Smbios Event Log 4-17
Erase Event Log 4-17
When Log is Full 4-17
Log System Boot Event 4-18
MECI 4-18
METW 4-18
Log OEM Codes 4-18
Convert OEM Codes 4-18
View SmBIOS Event Log 4-18
4-5 IPMI Settings 4-19
▶System Event Log 4-19
When SEL Full 4-19
Log EFI Status Codes 4-19
▶BMC Network Configuration 4-20
Update IPMI LAN Configuration 4-20
Configuration Source 4-20
4-6 Boot Settings 4-21
Setup Prompt Timeout 4-21
Retry Boot Devices 4-21
Boot Option Filter 4-21
Fast Boot 4-21
Boot Options Priorities 4-22
Boot Option #1, Boot option #2, etc. 4-22
Network Device BBS Priorities 4-22
4-8 Security Settings 4-23
Password Check 4-23
Administrator Password 4-23
Secure Boot Control 4-23
▶Secure Boot Policy 4-24
Internal FV 4-24
Option ROM, Removable Media, Fixed Media 4-24

▶Key Management 4-24
Platform Key (PK) 4-24
Key Exchange Key Database (KEK) 4-24
Authorized Signature Database (DB) 4-24
Forbidden Signature Database (DBX) 4-25
Manage All Factory Keys (PK, KEK, DB, DBX) 4-25
Install Factory Defaults 4-25

4-9 Save & Exit 4-26
Discard Changes and Exit 4-26
Save Changes and Reset 4-26
Discard Changes 4-26
Restore Defaults 4-27
Save As User Defaults 4-27
Restore User Defaults 4-27
Boot Override 4-27

Appendix A BIOS Error Beep Codes

A-1 BIOS Error Beep Codes A-1

Appendix B Software Installation Instructions

B-1 Installing Drivers B-1
B-2 Configuring SuperDoctor® III B-2

Appendix C UEFI BIOS Recovery Instructions

An Overview to the UEFI BIOS C-1
How to Recover the UEFI BIOS Image (-the Main BIOS Block) C-1
To Recover the Main BIOS Block Using a USB-Attached Device C-1

Chapter 1

Introduction

1-1 Overview

Checklist

Congratulations on purchasing your computer motherboard from an acknowledged leader in the industry. Supermicro boards are designed with the utmost attention to detail to provide you with the highest standards in quality and performance.

Please check that the following items have all been included with your motherboard. If anything listed here is damaged or missing, contact your retailer.

The following items are included in the retail box:

- One (1) Supermicro Mainboard
- Six (6) SATA cables
- One (1) I/O shield
- One (1) Supermicro CD containing drivers and utilities
- One (1) User's Manual

SUPERO X9SPU-F Motherboard Image

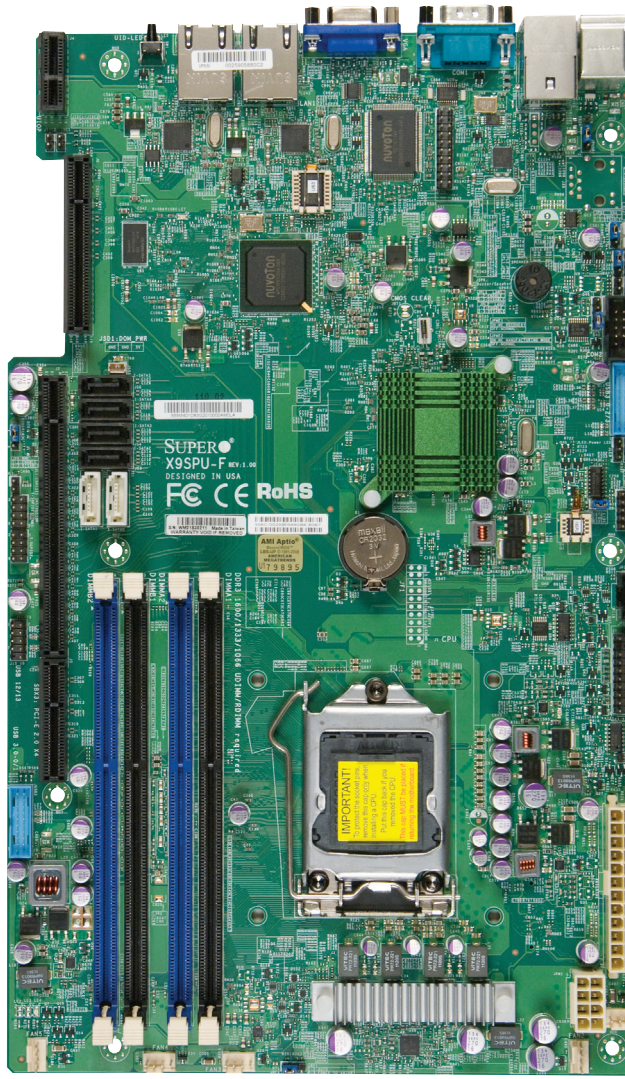

Note: All graphics shown in this manual were based upon the latest PCB Revision available at the time of publishing of the manual. The motherboard you've received may or may not look exactly the same as the graphics shown in this manual.

Motherboard Layout

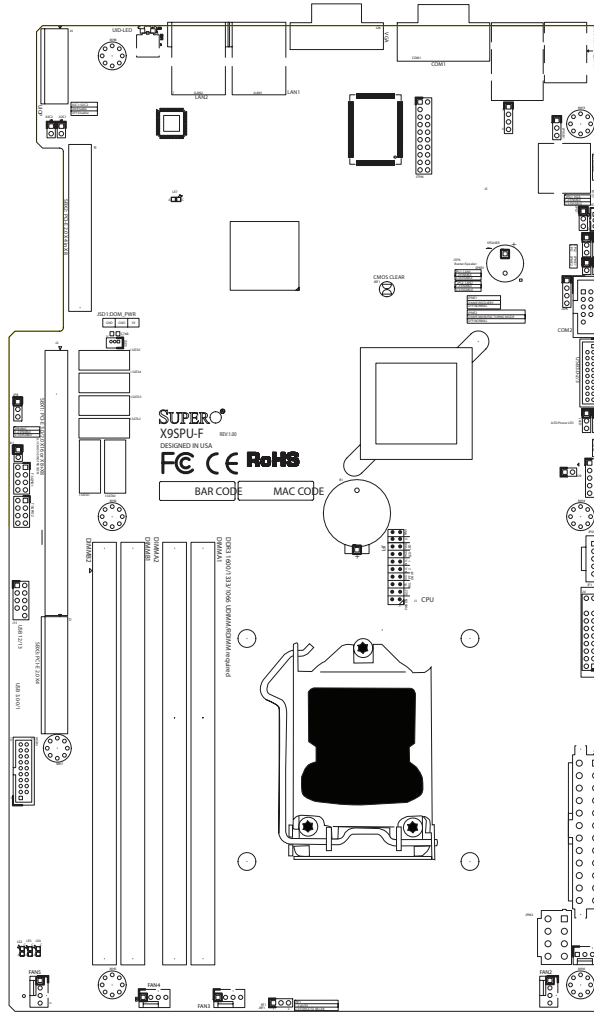

Important Notes to the User

- See Chapter 2 for detailed information on jumpers, I/O ports and JF1 front panel connections.
- "■" indicates the location of "Pin 1".
- Jumpers not indicated are for testing only.

X9SPU-F Motherboard Quick Reference

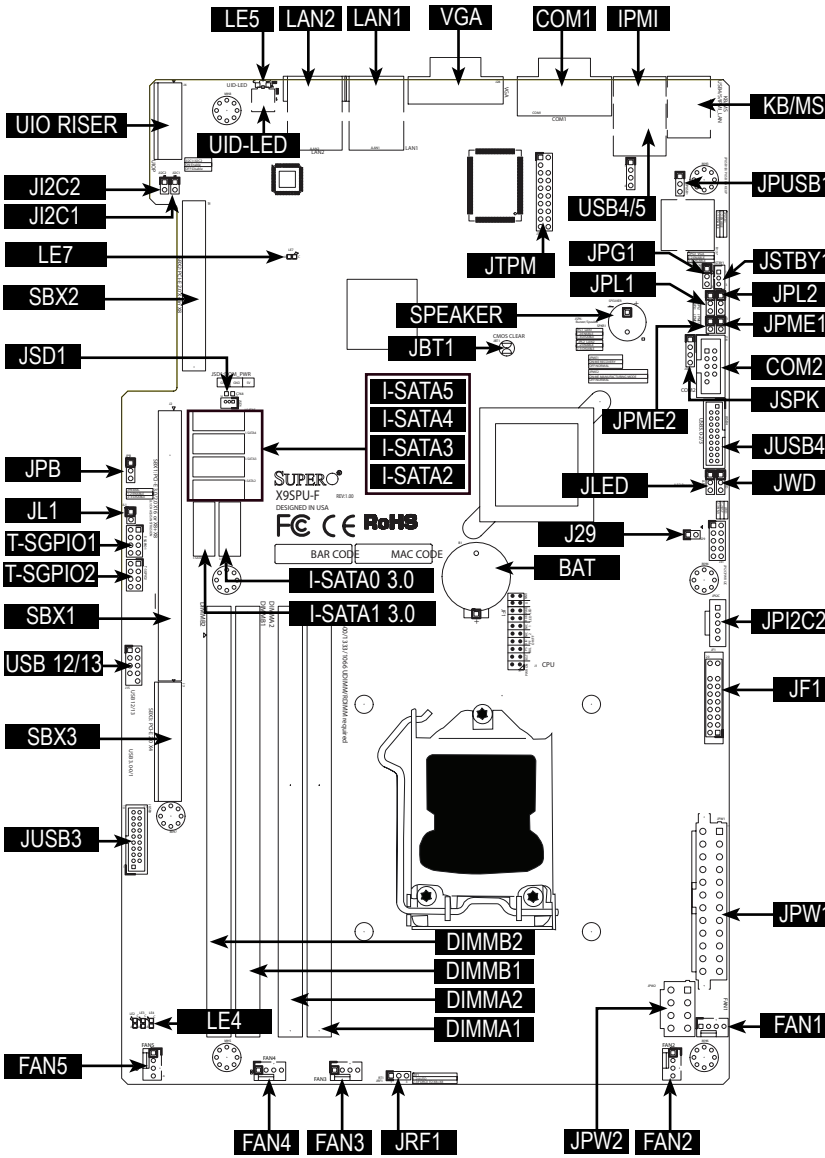

X9SPU-F Motherboard Headers/Connectors	
Connector/Switch	**Description**
UID-LED	Unit ID Switch
SBX2	Slot for Supemicro riser card P/N RSC-R1UW-E8R
SBX1, SBX3, UIO-RISER	Slots for Supermicro riser card
T-SGPIO1~T-SGPIO2	Serial Link General Purpose I/O Headers (5V Gen1/Gen 2)
I-SATA0, I-SATA1	SATA 3.0 Connectors via PCH (6Gb/s)
I-SATA2~I-SATA5	SATA 2.0 Connectors via PCH (3Gb/s)
KB/MS	PS/2 Keyboard and Mouse Ports
FAN1~FAN5	System/CPU Fan Headers
SPEAKER	Internal Speaker (Leave jumper on JSPK installed, pins 1-2)
JSD1	SATA Disk On Module (DOM) Power Connector
JSTBY1	Legacy Wake On LAN Header
JPW1	24-pin Main ATX Power Connector
JPW2	8-pin Secondary Power Connector for the GPU
JPI2C2	Power Supply SMBus I2C Header
JF1	Front Panel Control Header
JL1	Chassis Intrusion Header
JLED	3-pin Power LED Header
JSPK	Internal Speaker/Buzzer Select or External Speaker Header
USB4/5	Rear USB Ports
JUSB4, JUSB3	Internal USB 3.0 Headers USB0/1, USB2/3
USB12/13	Internal USB 2.0 Headers USB12/13
BAT	Onboard Battery
JTPM	Trusted Platform Module (TPM) Header
LAN1/LAN2	Rear LAN Connectors (1Gb)
COM1, COM2	Rear Serial Port (COM1), Serial Port Header (COM2)
VGA	Rear VGA Port
DIMMA1~DIMMB2	DIMM Memory Slots
IPMI	Rear IPMI LAN Port

X9SPU-F Motherboard Jumpers		
Jumper	Description	Default
JPG1	Onboard VGA Enable	Pins 1-2 (Enabled)
JI2C1~JI2C2	SMB to PCI Slots	Pins 1-2 (Enabled)
JWD	Watch Dog Timer Reset	Pins 1-2 (Reset)
JRF1	x16 PCIe Setting, Force to x8+x8	Pins 1-2 (Auto)
JPL1/JPL2	LAN1/LAN2 Enable/Disable	Pins 1-2 (Enabled)
JPB	BMC Enable	Pins 1-2 (Enabled)
JPME1	ME Recovery Mode Select	Pins 2-3 (Disabled)
JPME2	ME Manufacture Mode	Pins 2-3 (Disabled)
JUSB1	USB Wake-up Enable (Rear USB Ports)	Pins 1-2 (Enabled)
JBT1	CMOS Clear	See Chapter 2
J29	BIOS EEPROM Power	Pins 1-2 (Enabled)

X9SPU-F Motherboard LED Indicators			
LED	**Description**	**Color/State**	**Status**
LE7	IPMI Heartbeart	Green: Blinking	IPMI Normal
LE4	Standby Power LED	Green: Solid On	Standby Power On
LE5	Unit ID LED	Blue: Solid On	Unit ID Switch is On

Motherboard Features

CPU	Single Intel® Xeon E3-1200 v2 processor family and Gen-2 Core-i3 (LGA 1155) processors. It is also backward compatible with Xeon E3-1200 processors.	
Memory	Four (4) UDIMM slots support up to 32GB of DDR3 Unbuffered, ECC UDIMM memory, 1333/1600MHz..	
	Supports dual-channel memory bus	
	DIMM sizes	
	UDIMM	1GB, 2GB, 4GB, 8GB
Chipset	Intel® C216 Express	
Expansion	**PCI Slots (Supported on Supermicro Riser Cards)**	
	One (1) PCI-Express 3.0 x16 slot	
	One (1) PCI-Express 2.0 x4 in x8 slot	
	One (1) PCI-Express 2.0 x4 in proprietary slot	
	One (1) Universal I/O (UIO) Slot	
Network Connections	**Integrated LAN**	
	Two (2) Intel 82574L Gb LAN ports	
I/O Devices	**SATA Connections**	
	SATA 3.0 Ports	Two (2) 6 Gb/s
	SATA 2.0 Ports	Four (4) 3 Gb/s RAID 0, 1, 5, 10
	USB Devices	
	Two (2) USB 2.0 ports on the rear I/O panel	
	Two (2) USB 2.0 via one header for front panel access	
	Four (4) USB 3.0 via two headers for front panel access	
	Serial (COM) Ports	
	Two (2) Fast UART 16550 connections on the I/O backpanel and one header	
	Super I/O	
	Winbond Super I/O NCT6776F	
BIOS	32 Mb SPI AMI BIOS® SM Flash BIOS	
	Plug & Play, DMI 2.3, ACPI 1.0 (Limited), USB Keyboard support	
Power Configuration	ACPI/ACPM Power Management	
	Main Switch Override Mechanism	
	Power-on mode for AC power recovery	

PC Health Monitoring	**CPU & Chassis Monitoring**
	Onboard voltage monitors for CPU core, +3.3V, +5V, +/-12V, +3.3V Stdby, +5V Stdby, VBAT, HT, Memory, Chipset
	CPU 4-phase switching voltage regulator
	CPU/System overheat LED and thermal control
	CPU Thermal Trip support
	CPU & Chassis Environment Monitor
	Fan Control
	Fan status monitoring with firmware 4-pin (Pulse Width Modulation) fan speed control
	Low noise fan speed control
System Management	PECI (Platform Environment Configuration Interface) 2.0 support
	System resource alert via SuperDoctor III
	SuperoDoctor III, Watch Dog, NMI
	Chassis Intrusion header and detection
CD Utilities	BIOS flash upgrade utility
	Drivers and software for Intel® C216 chipset utilities
Other	ROHS 6/6 (Full Compliance, Lead Free)
	TPM 1.2 on board
	DOM (Disk on Module) Power Connector Support
	FCC B, EuP Lot 6, WHQL
Dimensions	8" x 13" UIO form factor, 6 layers

X9SPU-F Motherboard Block Diagram

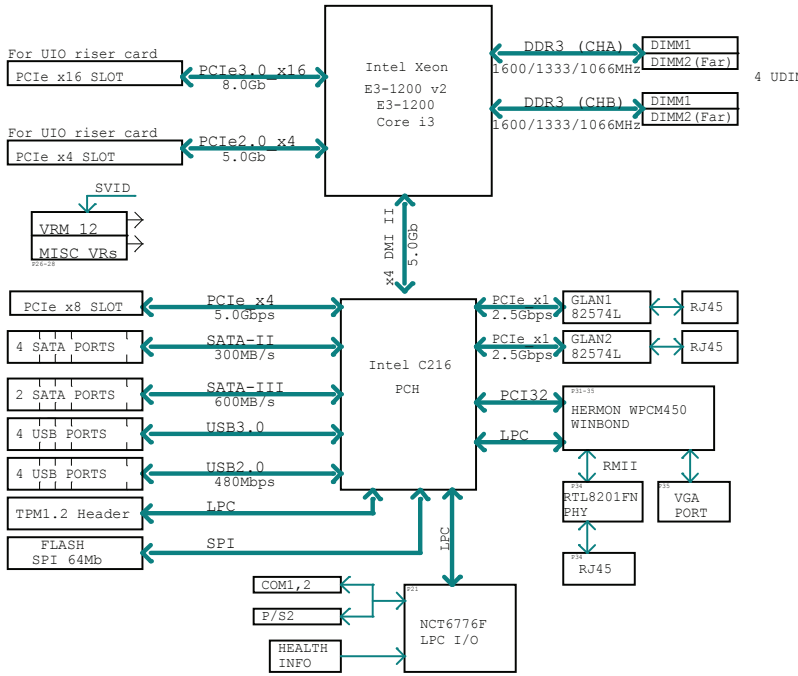

System Block Diagram

Note: This is a general block diagram and may not exactly represent the features on your motherboard. See the Motherboard Features pages for the actual specifications of each motherboard.

1-2 Chipset Overview

The Intel® C216 series is a single chip solution that is designed for dedicated servers and workstations. It supports high-speed SAS, SATA and advanced requirements for Intel Xeon platforms.

Intel C216 Chipset Features

- Direct Media Interface (up 5 Gt/s transfer, Full Duplex)
- Intel® Matrix Storage Technology and Intel Rapid Storage Technology
- 2 SATA Gen 3, RAID, 4 SATA Gen 2 Support
- Manageability Engine (ME 8.0)
- PCI Express 2.0 Interface (up to 5.0 GT/s)
- PCI Express 3.0 Interface (up to 8.0 GT/s)
- SATA 3.0 ports (up to 6Gb/s)

1-3 Special Features

Recovery from AC Power Loss

Basic I/O System (BIOS) provides a setting for you to determine how the system will respond when AC power is lost and then restored to the system. You can choose for the system to remain powered off (in which case you must press the power switch to turn it back on), or for it to automatically return to a power-on state. See the Advanced BIOS Setup section to change this setting. The default setting is **Last State**.

1-4 PC Health Monitoring

This section describes the PC health monitoring features of the board. All have an onboard System Hardware Monitoring chip that supports PC health monitoring. An onboard voltage monitor will scan these onboard voltages continuously: CPU core, +3.3V, +5V, +/-12V, +3.3V Stdby, +5V Stdby, VBAT, HT, Memory, Chipset. Once a voltage becomes unstable, a warning is given, or an error message is sent to the screen. The user can adjust the voltage thresholds to define the sensitivity of the voltage monitor.

Fan Status Monitor with Firmware Control

PC health monitoring in the BIOS can check the RPM status of the cooling fans. The onboard CPU and chassis fans are controlled by Thermal Management via BIOS (under the Hardware Monitoring section in the Advanced Setting).

Environmental Temperature Control

The thermal control sensor monitors the CPU temperature in real time and will turn on the thermal control fan whenever the CPU temperature exceeds a user-defined threshold. The overheat circuitry runs independently from the CPU. Once the thermal sensor detects that the CPU temperature is too high, it will automatically turn on the thermal fans to prevent the CPU from overheating. The onboard chassis thermal circuitry can monitor the overall system temperature and alert the user when the chassis temperature is too high.

Note: To avoid possible system overheating, please be sure to provide adequate airflow to your system.

System Resource Alert

This feature is available when the system is used with Supero Doctor III in the Windows OS environment or used with Supero Doctor II in Linux. Supero Doctor is used to notify the user of certain system events. For example, you can also configure Supero Doctor to provide you with warnings when the system temperature, CPU temperatures, voltages and fan speeds go beyond predefined thresholds.

1-5 ACPI Features

ACPI stands for Advanced Configuration and Power Interface. The ACPI specification defines a flexible and abstract hardware interface that provides a standard way to integrate power management features throughout a PC system, including its hardware, operating system and application software. This enables the system to automatically turn on and off peripherals such as CD-ROMs, network cards, hard disk drives and printers.

In addition to enabling operating system-directed power management, ACPI also provides a generic system event mechanism for Plug and Play, and an operating system-independent interface for configuration control. ACPI leverages the Plug and Play BIOS data structures, while providing a processor architecture-independent implementation that is compatible with the Microsoft® Windows® series of Operating Systems.

Slow Blinking LED for Suspend-State Indicator

When the CPU goes into a suspend state, the chassis power LED will start to blink to indicate that the CPU is in suspend mode. When the user presses any key, the CPU will "wake up", and the LED will automatically stop blinking and remain on.

1-6 Power Supply

As with all computer products, a stable power source is necessary for proper and reliable operation. It is even more important for processors that have high CPU clock rates.

This motherboard accommodates 24-pin ATX power supplies. Although most power supplies generally meet the specifications required by the CPU, some are inadequate. In addition, the 12V 8-pin power connectors located at JPW2 and (JPW3 if supported) are also required to ensure adequate power supply to the system. Also your power supply must supply 1.5A for the Ethernet ports.

Warning! To prevent damage to the power supply or motherboard, please use a power supply that contains a 24-pin and a 8-pin power connectors.

Be sure to connect these connectors to the 24-pin (JPW1) and the 8-pin (JPW2/JPW3) power connectors on the motherboard. Failure in doing so will void the manufacturer warranty on your power supply and motherboard.

It is strongly recommended that you use a high quality power supply that meets ATX power supply Specification 2.02 or above. It must also be SSI compliant. (For more information, please refer to the web site at http://www.ssiforum.org/). Additionally, in areas where noisy power transmission is present, you may choose to install a line filter to shield the computer from noise. It is recommended that you also install a power surge protector to help avoid problems caused by power surges.

1-7 Super I/O

The Super I/O supports two high-speed, 16550 compatible serial communication ports (UARTs). Each UART includes a 16-byte send/receive FIFO, a programmable baud rate generator, complete modem control capability and a processor interrupt system. Both UARTs provide legacy speed with baud rate of up to 115.2 Kbps as well as an advanced speed with baud rates of 250 K, 500 K, or 1 Mb/s, which support higher speed modems.

The Super I/O provides functions that comply with ACPI (Advanced Configuration and Power Interface), which includes support of legacy and ACPI power management through an SMI or SCI function pin. It also features auto power management to reduce power consumption.

Notes

Chapter 2

Installation

2-1 Static-Sensitive Devices

Electrostatic-Discharge (ESD) can damage electronic components. To avoid damaging your system board, it is important to handle it very carefully. The following measures are generally sufficient to protect your equipment from ESD.

Precautions

- Use a grounded wrist strap designed to prevent static discharge.
- Touch a grounded metal object before removing the board from the antistatic bag.
- Handle the board by its edges only; do not touch its components, peripheral chips, memory modules or gold contacts.
- When handling chips or modules, avoid touching their pins.
- Put the motherboard and peripherals back into their antistatic bags when not in use.
- For grounding purposes, make sure your computer chassis provides excellent conductivity between the power supply, the case, the mounting fasteners and the motherboard.
- Use only the correct type of onboard CMOS battery. Do not install the onboard battery upside down to avoid possible explosion.

Unpacking

The motherboard is shipped in antistatic packaging to avoid static damage. When unpacking the board, make sure that the person handling it is static protected.

2-2 Processor and Heatsink Installation

Warning: When handling the processor package, avoid placing direct pressure on the label area of the fan.

Notes:

Always connect the power cord last, and always remove it before adding, removing or changing any hardware components. Make sure that you install the processor into the CPU socket before you install the CPU heatsink.

If you buy a CPU separately, make sure that you use an Intel-certified multi-directional heatsink only.

Make sure to install the system board into the chassis before you install the CPU heatsink.

When receiving a server board without a processor pre-installed, make sure that the plastic CPU socket cap is in place and none of the socket pins are bent; otherwise, contact your retailer immediately.

Refer to the Supermicro website for updates on CPU support.

Installing the LGA1155 Processor

1. Remove the protective plastic cap. Press the load lever to release the load plate, which covers the CPU socket, from its locking position.

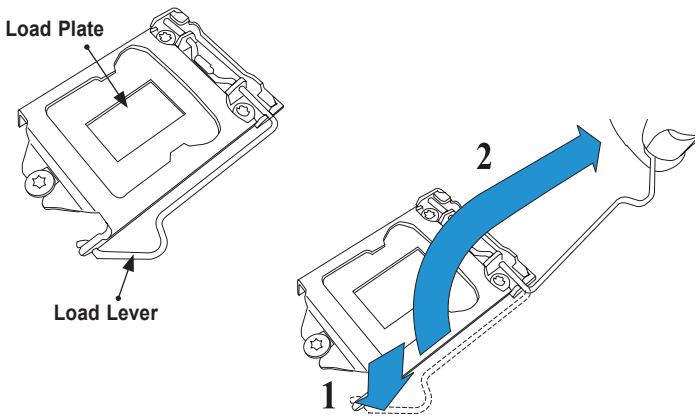

2. Gently lift the load lever to open the load plate.

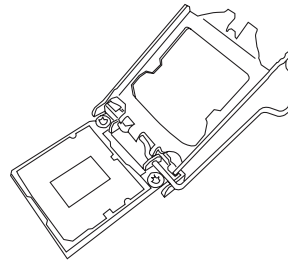

3. Use your thumb and your index finger to hold the CPU at the North center edge and the South center edge of the CPU.

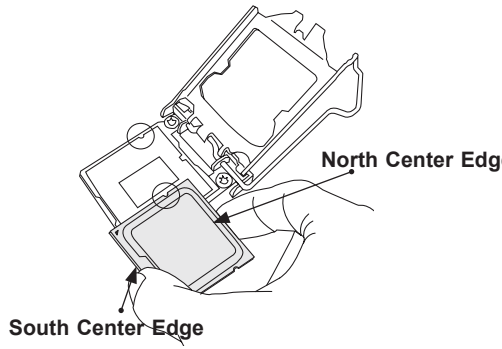

4. Align the CPU key that is the semi-circle cutouts against the socket keys. Once it is aligned, carefully lower the CPU straight down into the socket. (Do not drop the CPU on the socket. Do not move the CPU horizontally or vertically.

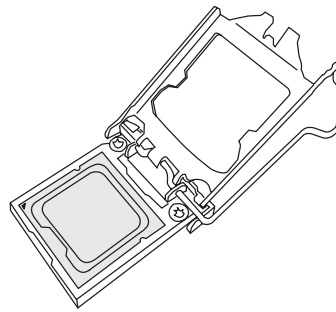

1. Do not rub the CPU against the surface or against any pins of the socket to avoid damaging the CPU or the socket.)

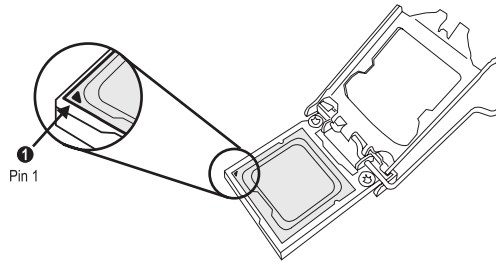

2. With the CPU inside the socket, inspect the four corners of the CPU to make sure that the CPU is properly installed.

3. Use your thumb to gently push the load lever down to the lever lock.

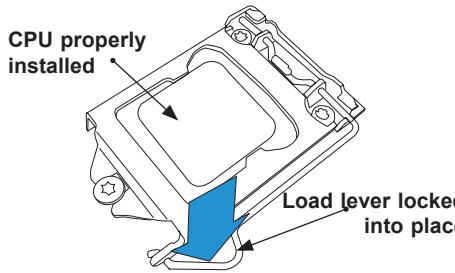

Warning: You can only install the CPU inside the socket only in one direction. Make sure that it is properly inserted into the CPU socket before closing the load plate. If it doesn't close properly, do not force it as it may damage your CPU. Instead, open the load plate again and double-check that the CPU is aligned properly.

Installing a Passive CPU Heatsink

1. Do not apply any thermal grease to the heatsink or the CPU die -- the required amount has already been applied.

2. Place the heatsink on top of the CPU so that the four mounting holes are aligned with those on the Motherboard's and the Heatsink Bracket underneath.

3. Screw in two diagonal screws (i.e., the #1 and the #2 screws) until just snug (-do not over-tighten the screws to avoid possible damage to the CPU.)

4. Finish the installation by fully tightening all four screws.

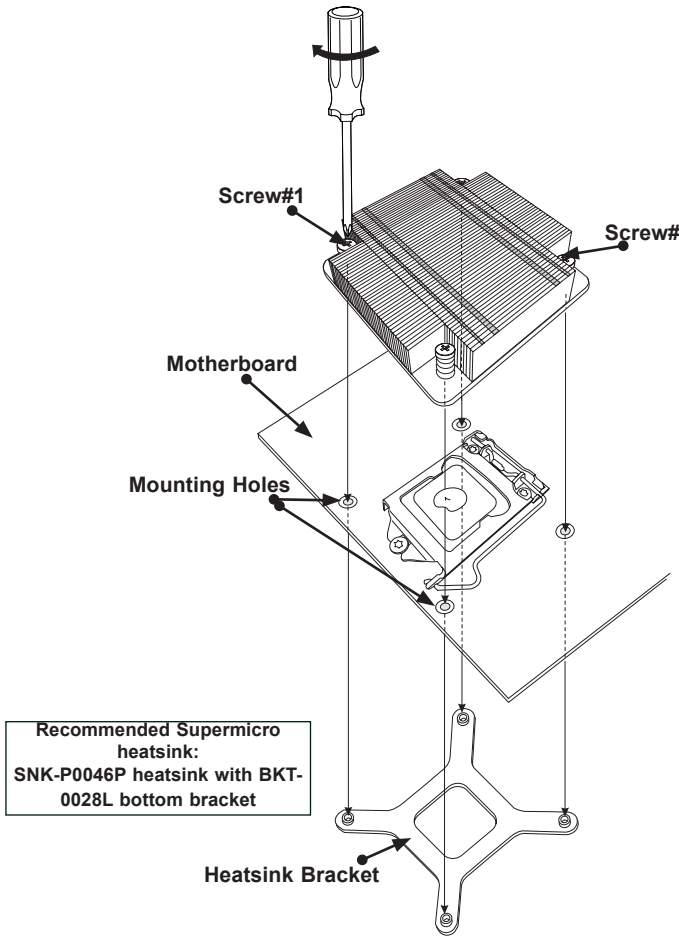

Removing the Heatsink

Warning: We do not recommend that the CPU or the heatsink be removed. However, if you do need to uninstall the heatsink, please follow the instructions below to uninstall the heatsink to prevent damage done to the CPU or the CPU socket.

1. Unscrew the heatsink screws from the motherboard in the sequence as shown in the illustration below.

2. Gently wriggle the heatsink to loosen it from the CPU. (Do not use excessive force when wriggling the heatsink!!)

3. Once the CPU is loosened, remove the CPU from the CPU socket.

4. Clean the surface of the CPU and the heatsink, removing the used thermal grease. Reapply the proper amount of thermal grease on the surface before re-installing the CPU and the heatsink.

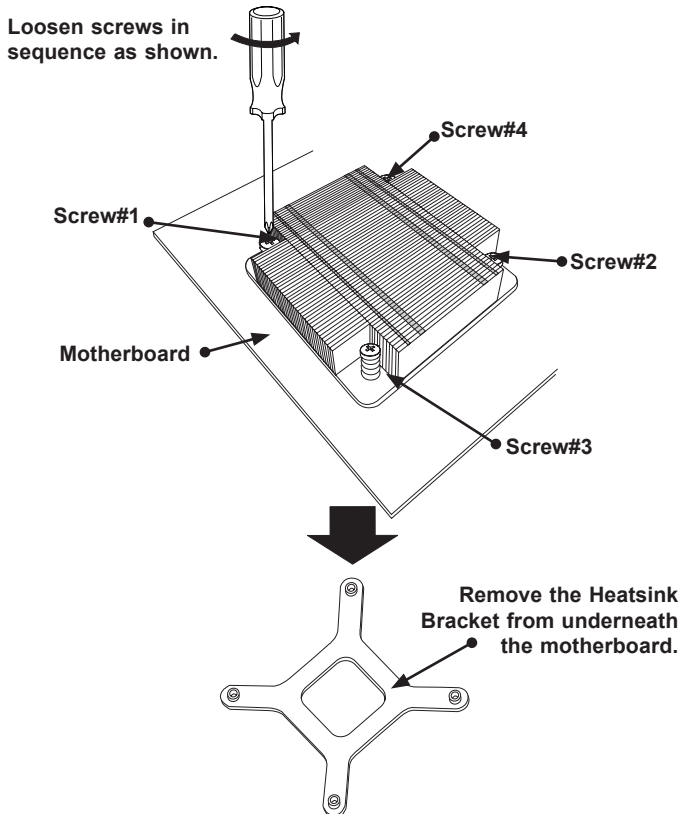

2-3 Installing DDR3 Memory

CAUTION

Exercise extreme care when installing or removing DIMM modules to prevent any possible damage.

Note: Check the Supermicro website for recommended memory modules.

DIMM Installation

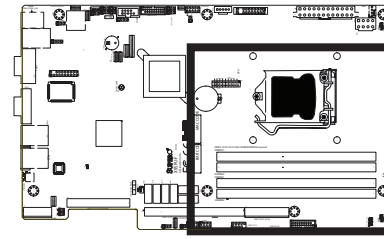

1. Insert the desired number of DIMMs into the memory slots, starting with DIMMB2, DIMMA2 then DIMMB1, DIMMA1. For best performance, please use the memory modules of the same type and speed in the same bank.

2. Push the release tabs outwards on both ends of the DIMM slot to unlock it.
3. Align the key of the DIMM module with the receptive point on the memory slot.
4. Align the notches on both ends of the module against the receptive points on the ends of the slot.

5. Use two thumbs together to press the notches on both ends of the module straight down into the slot until the module snaps into place.

6. Press the release tabs to the lock positions to secure the DIMM module into the slot.

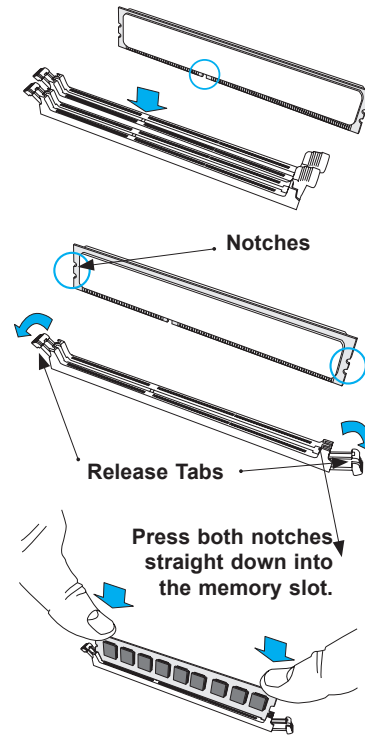

Removing Memory Modules

Reverse the steps above to remove the DIMM modules from the motherboard.

Memory Support

The X9SPU-F motherboard supports up to 32GB of 1600/1333 MHz ECC DDR3 UDIMMs in four (4) memory slots. Please refer to the illustration below and the table on the next page:

Memory Population Guidelines

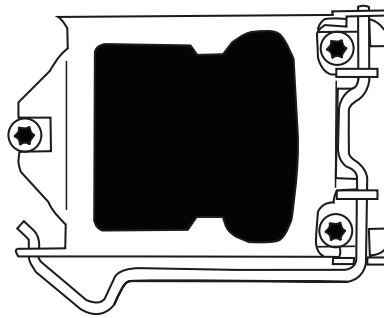

DIMMA1
DIMMA2 (Blue Slot)

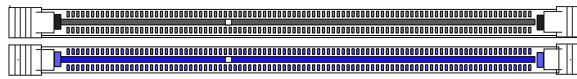

DIMMB1
DIMMB2 (Blue Slot)

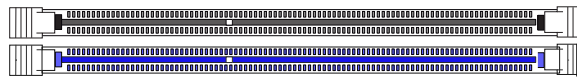

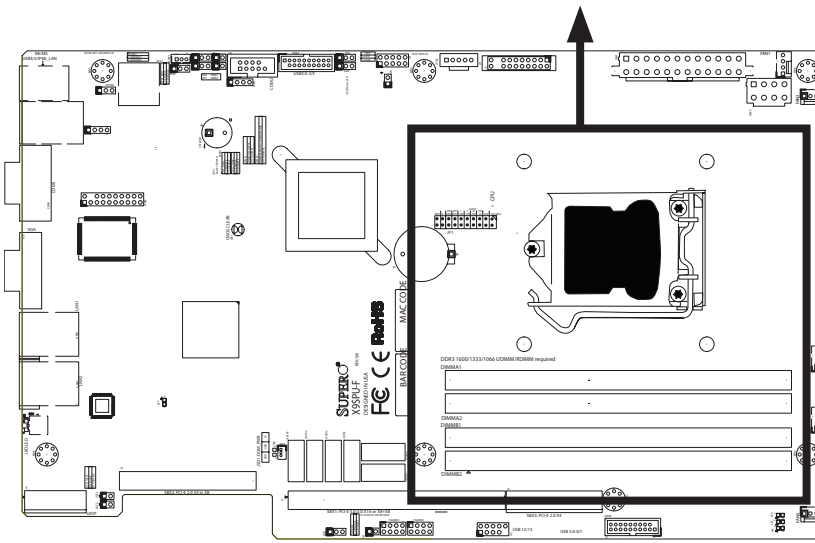

Memory Population Guidelines

When installing memory modules, the DIMM slots should be populated in the following order: DIMMB2, DIMMA2 then DIMMB1, DIMMA1.

- Always use DDR3 DIMM modules of the same size, type and speed.
- Mixed DIMM speeds can be installed. However, all DIMMs will run at the speed of the slowest DIMM.
- The motherboard will support odd-numbered modules (1 or 3 modules installed). However, for best memory performance, install DIMM modules in pairs to activate memory interleaving.

Recommended Population (Balanced)				
DIMMA1	**DIMMB1**	**DIMMA2**	**DIMMB2**	**Total System Memory**
2GB	2GB			4GB
2GB	2GB	2GB	2GB	8GB
4GB	4GB			8GB
4GB	4GB	4GB	4GB	16GB
8GB	8GB			16GB
8GB	8GB	8GB	8GB	32GB

Note: Up to 32GB of memory are supported using ECC UDIMMs.

2-4 Motherboard Installation

All motherboards have standard mounting holes to fit different types of chassis. Make sure that the locations of all the mounting holes for both motherboard and chassis match. Although a chassis may have both plastic and metal mounting fasteners, metal ones are highly recommended because they ground the motherboard to the chassis. Make sure that the metal standoffs click in or are screwed in tightly. Then use a screwdriver to secure the motherboard onto the motherboard tray.

Tools Needed

Philips Screwdriver

Philips Screws

Standoffs

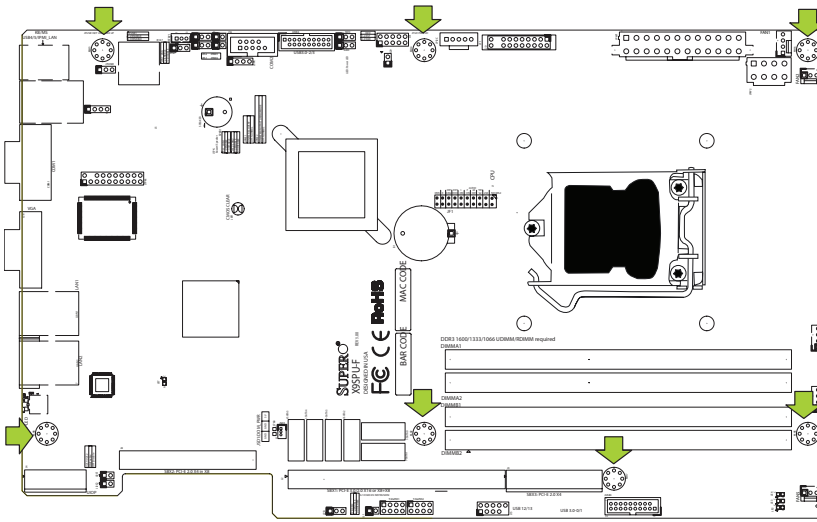

Location of Mounting Holes

STOP

Caution: 1) To prevent damage to the motherboard and its components, please do not use a force greater than 8 lb/inch on each mounting screw during motherboard installation. 2) Some components are very close to the mounting holes. Please take precautionary measures to avoid damaging these components when installing the motherboard to the chassis.

Installing the Motherboard

1. Install the I/O shield into the chassis.

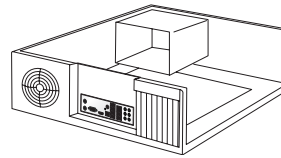

2. Locate the mounting holes on the motherboard.

3. Locate the matching mounting holes on the chassis. Align the mounting holes on the motherboard against the mounting holes on the chassis.

4. Install standoffs in the chassis as needed.

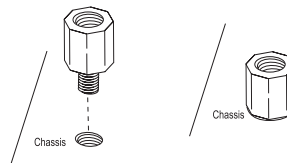

5. Install the motherboard into the chassis carefully to avoid damaging motherboard components.

6. Using the Philips screwdriver, insert a Pan head #6 screw into a mounting hole on the motherboard and its matching mounting hole on the chassis.

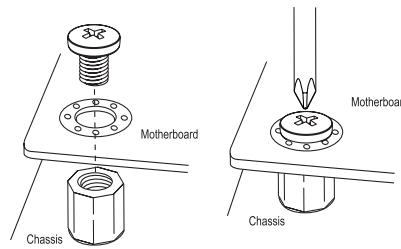

7. Repeat Step 5 to insert #6 screws into all mounting holes.

8. Make sure that the motherboard is securely placed in the chassis.

Note: Images displayed are is for illustration only. Your chassis or components might look different from those shown in this manual.

2-5 Connectors/IO Ports

The I/O ports are color coded in conformance with the PC 99 specification. See the figure below for the colors and locations of the various I/O ports.

Motherboard I/O Back panel

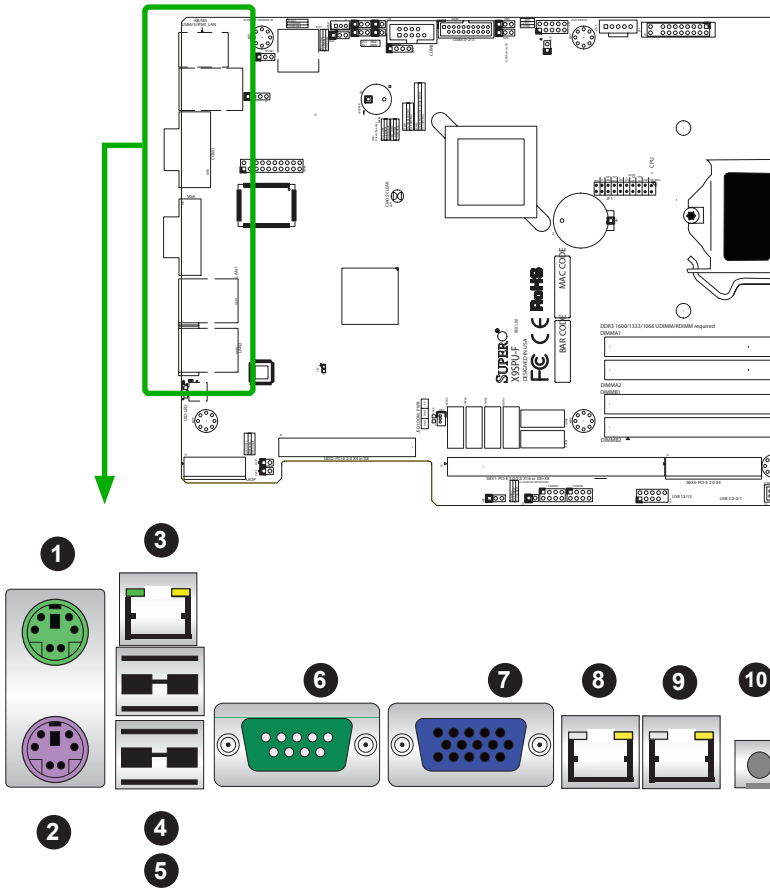

Motherboard I/O Back panel	
1. PS/2 Keyboard Port	6. COM1
2. PS/2 Mouse Port	7. VGA
3. IPMI LAN	8. LAN 1
4. USB 3	9. LAN 2
5. USB 4	10. UID Switch

Universal Serial Bus (USB)

Two (2) Universal Serial Bus (USB) 2.0 ports are located on the I/O back panel. There are also four (4) USB 3.0 ports on two headers, and two (2) USB 2.0 ports on one header on the motherboard that may be used to provide front chassis access using USB cables (not included). See the tables on the right for pin definitions.

Front Panel USB (2.0) Header Pin Definitions

Pin #	Definition	Pin #	Definition
1	+5V	2	+5V
3	USB_PN2	4	USB_PN3
5	USB_PP2	6	USB_PP3
7	Ground	8	Ground
9	Key	10	Ground

Back Panel USB (2.0) Pin Definitions

Pin#	Definition	Pin#	Definition
1	+5V	5	+5V
2	USB_PN1	6	USB_PN0
3	USB_PP1	7	USB_PP0
4	Ground	8	Ground

Back Panel USB (3.0) Pin Definitions

Pin#	Pin#	Signal Name	Description
1	10	VBUS	Power
2	11	D-	USB 2.0 Differential Pair
3	12	D+	
4	13	Ground	Ground for PWR Return
5	14	StdA_SSRX-	SuperSpeed Receiver
6	15	StdA_SSRX+	Differential Pair
7	16	GND_DRAIN	Ground for Signal Return
8	17	StdA_SSTX-	SuperSpeed Transmitter
9	18	StdA_SSTX+	Differential Pair

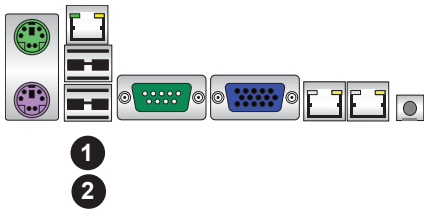

1. Back Panel USB 2.0 (USB #4)
2. Back Panel USB 2.0 (USB #5)
3. Front Panel USB 3.0 (USB #2/3)
4. Front Panel USB 3.0 (USB #0/1)
5. Front Panel USB 2.0 (USB #12/13)

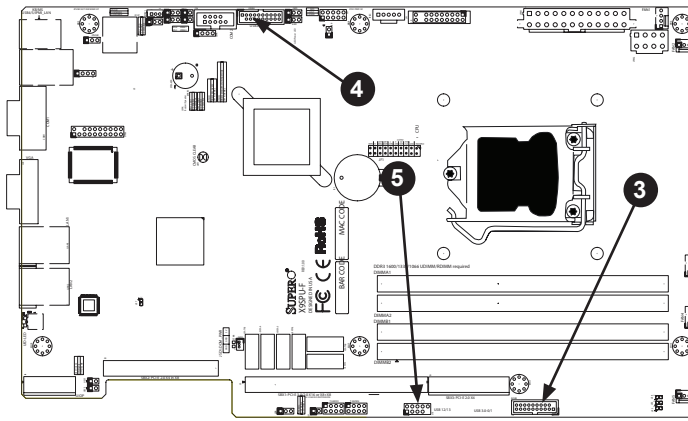

Ethernet Ports (LAN1/LAN2)

Two Ethernet ports (LAN1/LAN2) are located next to the VGA port on the I/O backpanel. These ports provide networking connectivity with speeds up to 1Gb/s. Please see the table on the left for the pin definitions.

LAN/IPMI Ports Pin Definition			
Pin#	Definition		
1	TD0-	10	SGND
2	TD0+	11	P3V3SB
3	TD1-	12	Act LED
4	TD1+	13	Link 100 LED (Green, +3V3SB)
5	TD2-	14	Link 1000 LED (Yellow, +3V3SB)
6	TD2+	15	Ground
7	TD3-	16	Ground
8	TD3+	17	Ground
9	P2V5SB	18	Ground

(NC: No Connection)

IPMI Port (IPMI)

In addition to the two Ethernet ports (LAN1/LAN2) this motherboard also features an IPMI port. This provides remote system management access through a standard IP protocol network.

Unit Identifier Switch (UID)

The Unit ID Switch is located on the I/O backpanel. When the Unit ID Switch is turned on, both the blue rear Unit ID LED and front panel Unit LED on JF1 (if attached to the front Unit ID LED on the chassis) will activate. Push the Unit ID Switch again to turn off both Indicators. These Unit ID LED Indicators provide easy identification of the system unit, when installed in a server cabinet for instance. See also Unit ID LED later this chapter.

1. IPMI Port
2. LAN1
3. LAN2
4. Unit ID Switch
5. Rear Unit ID LED (Blue)

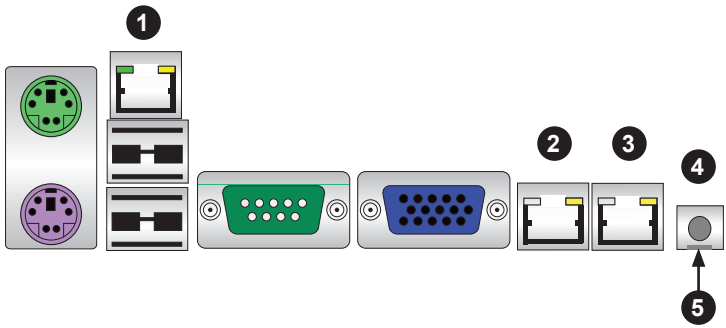

VGA Connector (VGA)

A Video (VGA/CRT) connector is located next to COM1 Port on the I/O backpanel. This connector is used to provide video and LCD/CRT display.

VGA Pin Definitions			
Pin#	Definition	Pin#	Definition
1	Red	10	Ground
2	Green	11	NC
3	Blue	12	MS1: SDA (DDC Data)
4	NC	13	HSYNC
5	Ground	14	VSYSNC
6	Ground	15	MS3: SCL (DDC CLK)
7	Ground	16	Case
8	Ground	17	Case
9	5V		
NC= No Connection			

Serial Ports

Two COM ports (COM1/COM2) are provided, with one located on the motherboard (COM2) and one on the I/O backpanel (COM1). See the table on the right for pin definitions.

Serial Ports-COM1/COM2 Pin Definitions			
Pin #	Definition	Pin #	Definition
1	DCD	6	DSR
2	RXD	7	RTS
3	TXD	8	CTS
4	DTR	9	RI
5	Ground	10	N/A

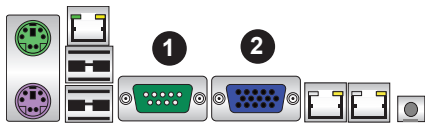

1. Serial Port (COM1)
2. VGA Port
3. Serial Port Header (COM2)

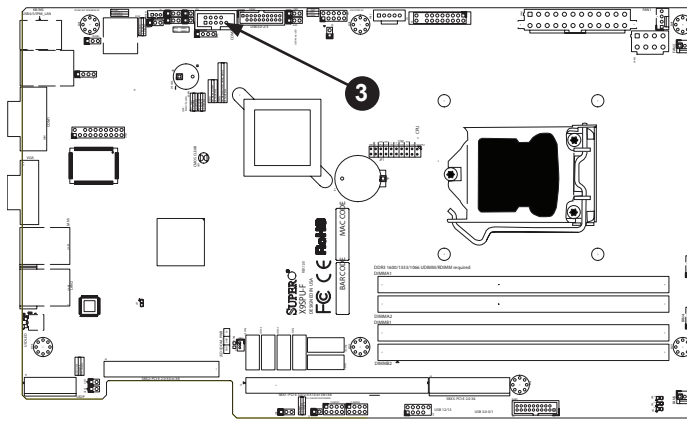

Front Control Panel

JF1 contains header pins for various buttons and indicators that are normally located on a control panel at the front of the chassis. These connectors are designed specifically for use with Supermicro server chassis. See the figure below for the descriptions of the various control panel buttons and LED indicators. Refer to the following section for descriptions and pin definitions.

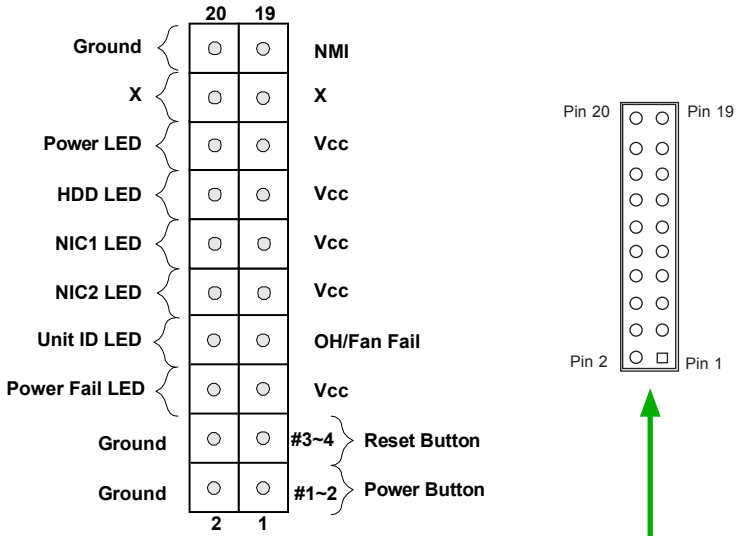

JF1 Header Pins

Front Control Panel Pin Definitions

Power LED

The Power LED connection is located on pins 15 and 16 of JF1. Refer to the table on the right for pin definitions.

Power LED Pin Definitions (JF1)	
Pin#	Definition
15	+5V
16	Ground

Power LED Status	
State	Definition
Off	System Off
On	System Running

HDD LED

The HDD LED connection is located on pins 13 and 14 of JF1. Attach a cable here to indicate the status of HDD-related activities, including IDE, SATA activities. See the table on the right for pin definitions.

HDD LED Pin Definitions (JF1)	
Pin#	Definition
13	+5V
14	HD Active

HDD LED Status	
State	Definition
Off	No Activity
Blinking	HDD Busy

Power Fail LED

The Power Fail LED connection is located on pins 5 and 6 of JF1. Refer to the table on the right for pin definitions.

PWR Fail LED Pin Definitions (JF1)	
Pin#	Definition
5	Vcc
6	Ground

Power Fail LED Status	
State	Definition
Off	Normal
On	Power Failure

A. PWR LED
B. HDD LED
C. PWR Fail LED

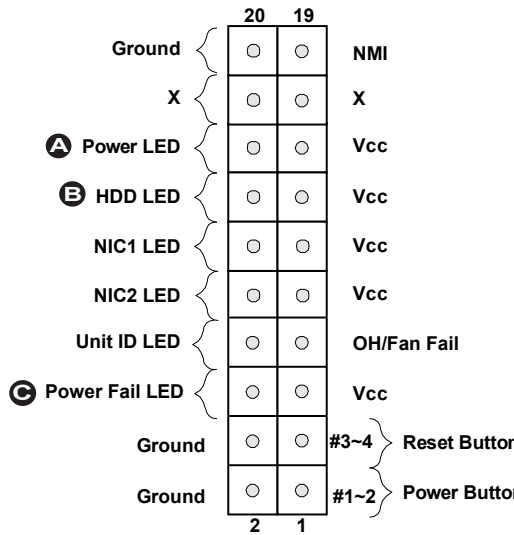

NIC1/NIC2 (LAN1/LAN2)

The NIC (Network Interface Controller) LED connection for LAN port 1 is located on pins 11 and 12 of JF1, and the LED connection for LAN Port 2 is on Pins 9 and 10. NIC1 LED and NIC2 LED are 2-pin NIC LED headers. Attach NIC LED cables to NIC1 and NIC2 LED indicators to display network activity. Refer to the table on the right for pin definitions.

LAN1/LAN2 LED Pin Definitions (JF1)	
Pin#	Definition
9/11	Vcc
10/12	Ground

NIC LED Status	
State	Definition
Off	No Activity
Blinking	NIC Busy

Unit ID LED (Front Panel) / OH / Fan Failure

Connect a cable to the Unit ID connection on pins 7 and 8 of JF1 to connect to the Unit ID LED on the chassis. The Unit ID LED is used together with the Unit ID (UID) Switch (see 2-16). When blinking, this will also indicate that a system fan failure or overheat has been detected by the system's built-in monitors.

Unit ID LED / OH / FF Pin Definitions (JF1)	
Pin#	Definition
7	OH/Fan Fail
8	UID LED

Unit ID LED Status	
State	Definition
Off	UID Off
Solid On	UID On
Blinking	System Overheat / Fan Failure

A. NIC1 LED
B. NIC2 LED
C. UID LED
D. Overheat / Fan Failure

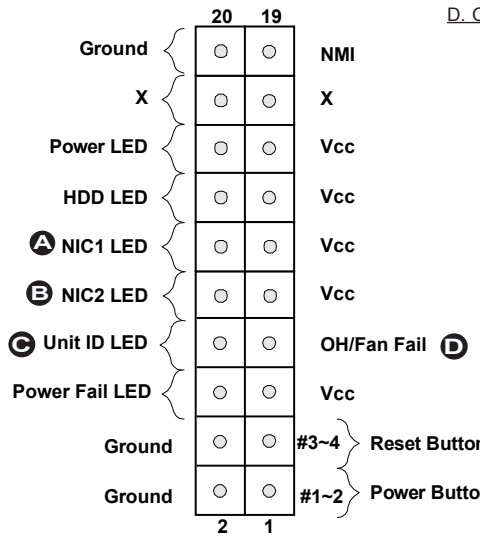

NMI Button

The non-maskable interrupt button header is located on pins 19 and 20 of JF1. Refer to the table on the right for pin definitions.

NMI Button Pin Definitions (JF1)	
Pin#	Definition
19	Control
20	Ground

Reset Button

The Reset Button connection is located on pins 3 and 4 of JF1. Momentarily contacting both pins will hard reset the system. Attach it to a hardware reset switch on the computer case to reset the system. Refer to the table on the right for pin definitions.

Reset Button Pin Definitions (JF1)	
Pin#	Definition
3	Reset
4	Ground

Power Button

The Power Button connection is located on pins1 and 2 of JF1. Momentarily contacting both pins will power on/off the system. This button can also be configured to function as a suspend button (with a setting in the BIOS - see Chapter 4). To turn off the power in the suspend mode, press the button for at least 4 seconds. Refer to the table on the right for pin definitions.

Power Button Pin Definitions (JF1)	
Pin#	Definition
1	Signal
2	+3V Standby

A. NMI Button
B. Reset Button
C. PWR Button

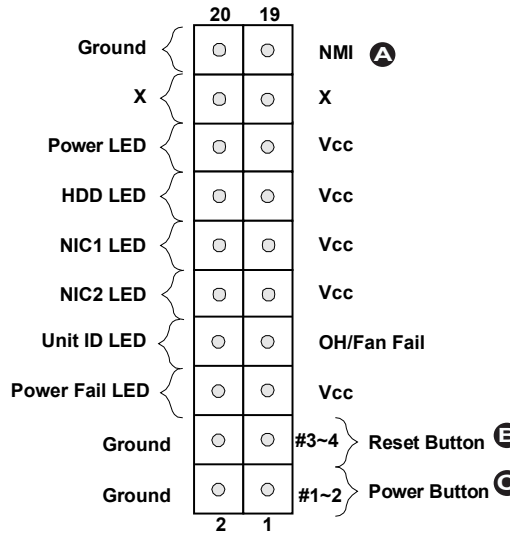

2-6 Connecting Cables & Optional Devices

This section provides brief descriptions and pin-out definitions for onboard headers and connectors. Be sure to use the correct cable for each header or connector.

ATX Main PWR (JPW1) & GPU PWR Connectors (JPW2)

The 24-pin main power connector (JPW1) is used to provide power to the motherboard. The 8-pin GPU PWR connector JPW2 is also required for the graphics processor. These power connectors meet the SSI EPS 12V specification. See the table on the right for pin definitions.

ATX Power 24-pin Connector Pin Definitions (JPW1)			
Pin#	Definition	Pin #	Definition
13	+3.3V	1	+3.3V
14	-12V	2	+3.3V
15	COM	3	COM
16	PS_ON	4	+5V
17	COM	5	COM
18	COM	6	+5V
19	COM	7	COM
20	Res (NC)	8	PWR_OK
21	+5V	9	5VSB
22	+5V	10	+12V
23	+5V	11	+12V
24	COM	12	+3.3V

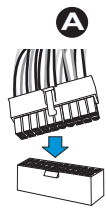

24-Pin Main PWR

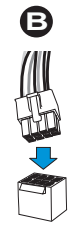

8-Pin GPU PWR

12V 8-pin Power Connector Pin Definitions	
Pins	Definition
1 through 4	Ground
5 through 8	+12V

(Required)

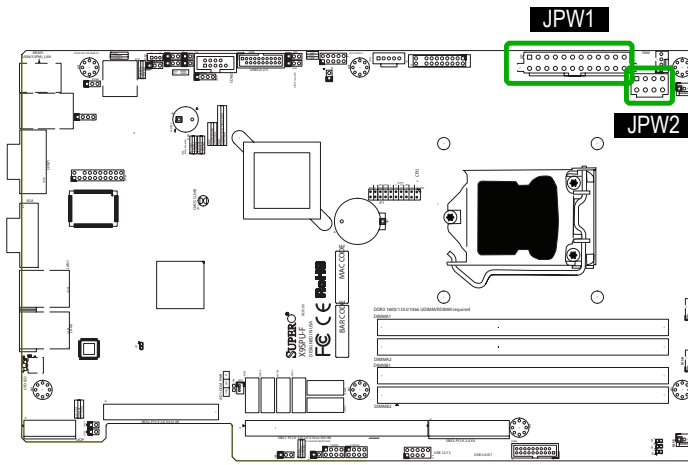

Fan Headers (FAN1~5)

The X9SPU-F series has five (5) fan headers (Fan 1~Fan 5). These fans are 4-pin fan headers. Though Pins 1-3 of the fan headers are backward compatible with traditional 3-pin fans, it is recommended that 4-pin fans are used to allow the fan speed control setting in the BIOS Hardware Monitoring section (if set) to automatically adjust fan speeds based on the system temperature. Refer to the table on the right for pin definitions.

Fan Header Pin Definitions	
Pin#	Definition
1	Ground (Black)
2	+12V (Red)
3	Tachometer
4	PWM_Control

Fan Header Recommended Usage	
Fan#	Definition
1~4	CPU/System
A~D	I/O & Addon Cards

Chassis Intrusion (JL1)

A Chassis Intrusion header is located at JL1 on the motherboard. Attach the appropriate cable from the chassis to inform you of a chassis intrusion when the chassis is opened.

Chassis Intrusion Pin Definitions (JL1)	
Pin#	Definition
1	Intrusion Input
2	Ground

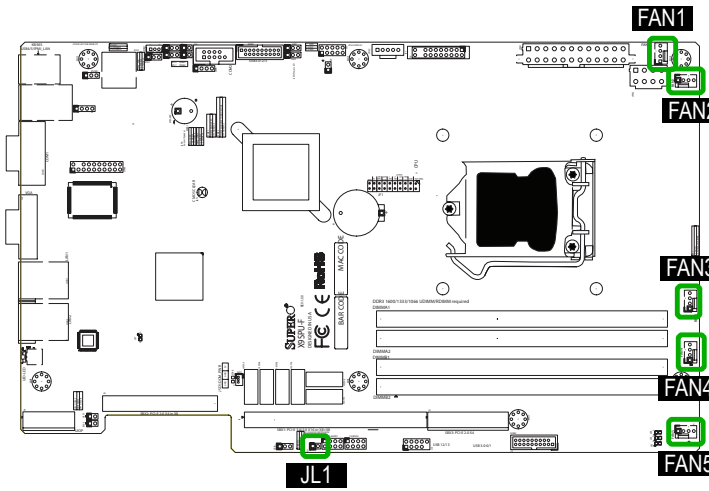

Legacy Wake-On-LAN Header (JSTBY1)

The onboard LANs (LAN1 and LAN2) do not need WOL header to support its Wake-On-LAN function. We preserved the legacy WOL header to provide convenience for some embedded customers who need internal power source from the board. See the table on the right for pin definitions.

Wake-On-LAN (JSTBY1) Pin Definitions	
Pin#	Definition
1	+5V Standby
2	Ground
3	Wake-up

Power Supply I2C (JPI2C2)

The Power Supply I2C Connector, located at JI2C1, monitors the status of the power supply, fan and system temperature. See the table on the right for pin definitions.

PWR Supply (I2C) Pin Definitions	
Pin#	Definition
1	Clock
2	Data
3	PWR Fail
4	Ground
5	3.3V

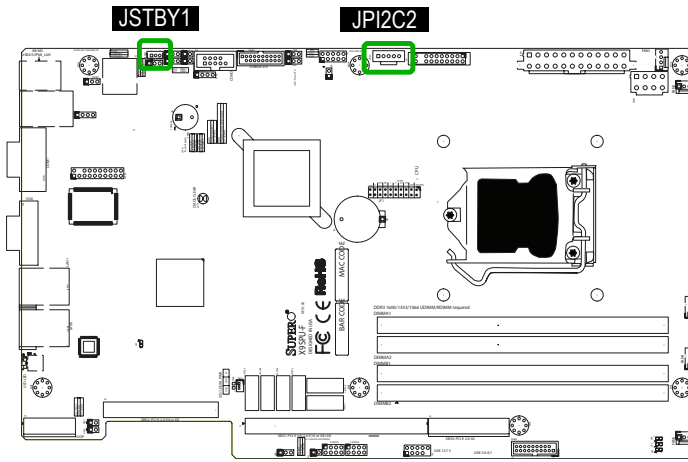

DOM PWR Connector (JSD1)

The Disk-On-Module (DOM) power connector, located at JSD1, provides 5V (Gen1/Gen) power to a solid-state DOM storage device connected to one of the SATA ports. See the table on the right for pin definitions.

DOM PWR (JSD1) Pin Definitions	
Pin#	Definition
1	5V
2	Ground
3	Ground

TPM Header (JTPM)

This header is used to connect a Trusted Platform Module (TPM), which is available from a third-party vendor. A TPM is a security device that supports encryption and authentication in hard drives. It enables the motherboard to deny access if the TPM associated with the hard drive is not installed in the system. See the table on the right for pin definitions.

Trusted Platform Module Header (JTPM1) Pin Definitions			
Pin #	Definition	Pin #	Definition
1	LCLK	2	GND
3	LFRAME#	4	No Pin
5	LRESET#	6	+5V (X)
7	LAD3	8	LAD2
9	3.3V	10	LAD1
11	LAD0	12	GND
13	SMB_CLK4	14	SMB_DAT4
15	+3V_DUAL	16	SERIRQ
17	GND	18	CLKRUN# (X)
19	LPCPD#	20	LDRQ# (X)

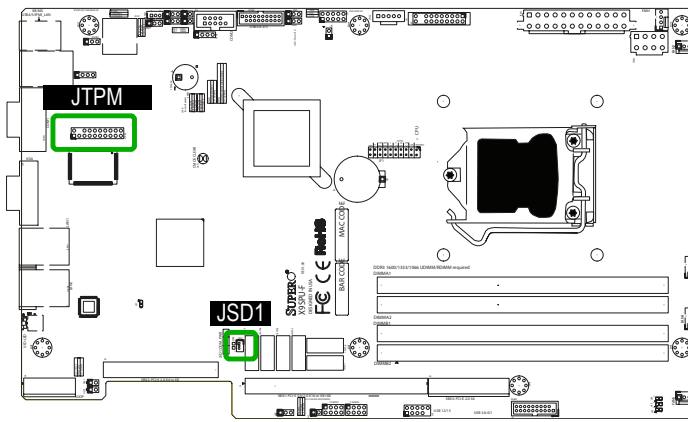

T-SGPIO1~2 Headers (T-SGPIO)

Four T-SGPIO (Serial-Link General Purpose Input/Output) headers are located next to the I-SATA Ports on the motherboard. These headers are used to communicate with the enclosure management chip in the system. See the table on the right for pin definitions. Refer to the board layout below for the locations of the headers.

Serial Link General-Purpose Headers (SGPIO) Pin Definitions

Pin#	Definition	Pin	Definition
1	NC	2	NC
3	Ground	4	DATA Out
5	Load	6	Ground
7	Clock	8	NC

External Power LED (JLED)

JLED is a 3-pin LED header that may be used to attach an external LED to indicate the power status of the motherboard.

Onboard PWR LED Pin Definitions

Pin#	Definition
1	VCC
2	No Connection
3	Connection to PWR LED in JF1

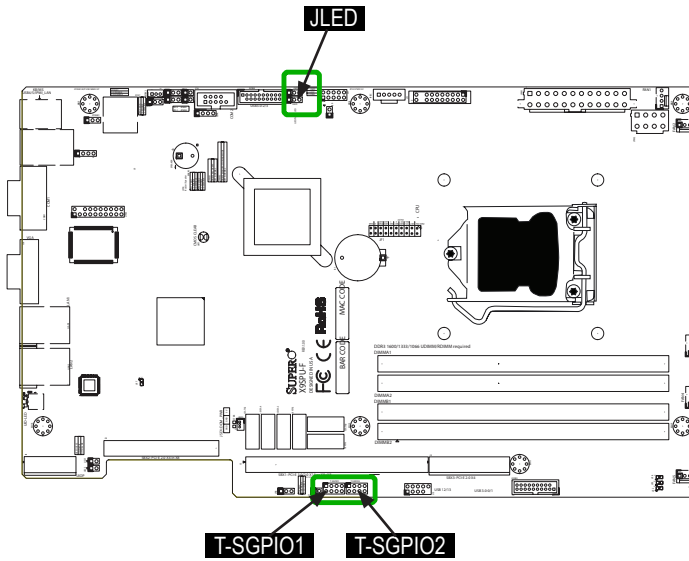

Internal Buzzer (SPEAKER)

The Internal Buzzer (SPEAKER) is used to provide audible indications for various beep codes. See the table on the right for pin definitions.

Internal Buzzer (SPEAKER) Pin Definition		
Pin#		Definitions
Pin 1	Pos. (+)	Beep In
Pin 2	Neg. (-)	Alarm Speaker

Speaker (JSPK)

On the JSPK header, pins 3~4 are used for the internal speaker. Close pins 3~4 with a jumper or cap to use the onboard speaker. If you wish to use an external speaker, remove the jumper and attach the external speaker's cable to pins 1~4. See the table on the right for pin definitions.

Speaker Connector Pin Definitions	
Pin Setting	Definition
Pins 3~4	Internal Speaker
Pins1~4	External Speaker

Internal Battery (BAT)

The Internal Battery (BAT) is used to provide battery backup to the CMOS, so the motherboard does not lose its configuration when the system is off.

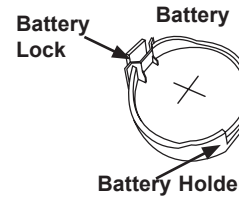

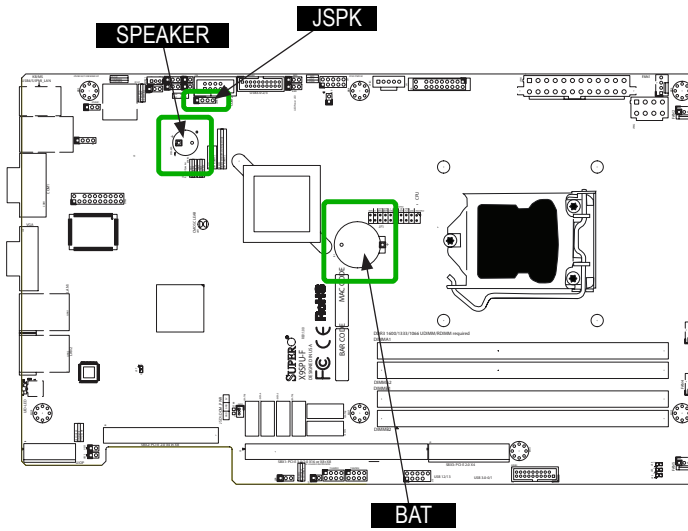

2-7 Jumper Settings

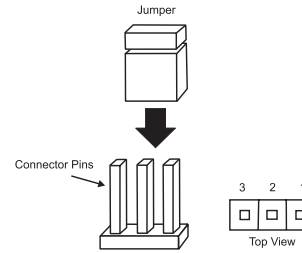

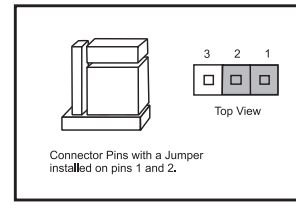

Explanation of Jumpers

To modify the operation of the motherboard, jumpers can be used to choose between optional settings. Jumpers create shorts between two pins to change the function of the connector. Pin 1 is identified with a square solder pad on the printed circuit board.

Note: On two-pin jumpers, "Closed" means the jumper is on, and "Open" means the jumper is off the pins.

Speaker Connector Pin Definitions	
Pin Setting	Definition
Pins 3~4	Internal Speaker
Pins1~4	External Speaker

LAN Port Enable/Disable (JPL1/ JPL2)

Jumpers JPL1 and JPL2 enables or disables LAN Port 1 and LAN Port 2 on the motherboard. See the table on the right for jumper settings. The default setting is enabled.

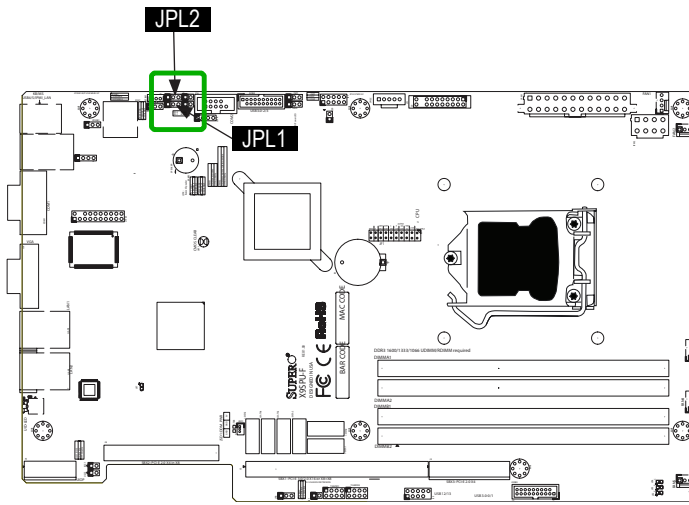

Clear CMOS (JBT1)

JBT1 is used to clear CMOS. Instead of pins, this "jumper" consists of contact pads to prevent accidental clearing of CMOS. To clear CMOS, use a metal object such as a small screwdriver to touch both pads at the same time to short the connection. Always remove the AC power cord from the system before clearing CMOS.

Important: For an ATX power supply, you must completely shut down the system, remove the AC power cord and then short JBT1 to clear CMOS.

PCI Slot SMB Enable (JI2C2/ JI2C3)

Use Jumpers JI2C2/JI2C3 to enable PCI SMB (System Management Bus) support to improve system management for the PCI slots. See the table on the right for jumper settings.

PCI Slot SMB Enable (JI2C) Jumper Settings	
Setting	Definition
Short	Enabled (Default)
Open	Disabled

BIOS EEPROM Power (J29)

Jumper J29 is used to enable or disable power to the BIOS EEPROM chip. This feature is reserved for factory use only, therefore it is recommended that the jumper remains shorted or enabled during normal operation.

BIOS EEPROM Power (J29) Jumper Settings	
Setting	Definition
Short	Enabled (Default)
Open	Disabled

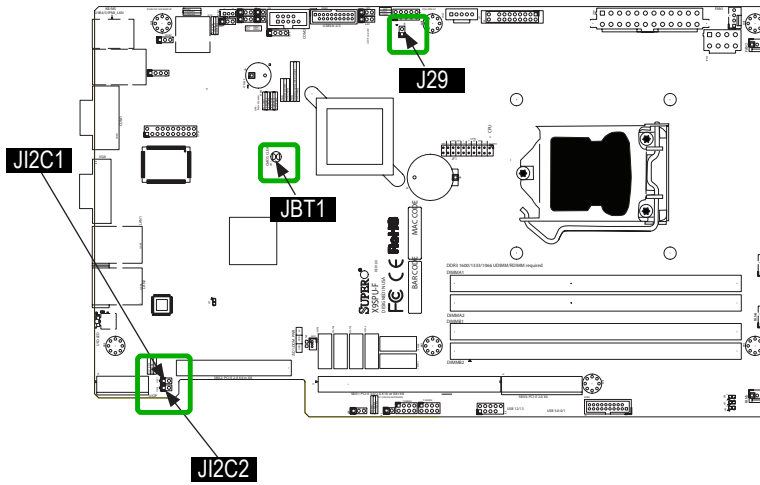

Watch Dog Reset (JWD)

Watch Dog (JWD) is a system monitor that can reboot the system when a software application hangs. Close Pins 1-2 to reset the system if an application hangs. Close Pins 2-3 to generate a non-maskable interrupt signal for the application that hangs. See the table on the right for jumper settings. Watch Dog must also be enabled in the BIOS.

Watch Dog (JWD) Jumper Settings	
Setting	Definition
Pins 1-2	Reset (Default)
Pins 2-3	NMI
Open	Disabled

VGA Enable (JPG1)

JPG1 allows you to enable or disable the onboard VGA port. The default position is on pins 1 and 2 to enable VGA. See the table on the right for jumper settings.

VGA Enable/Disable (JPG1) Jumper Settings	
Setting	Definition
Pins 1-2	Enabled (Default)
Pins 2-3	Disabled

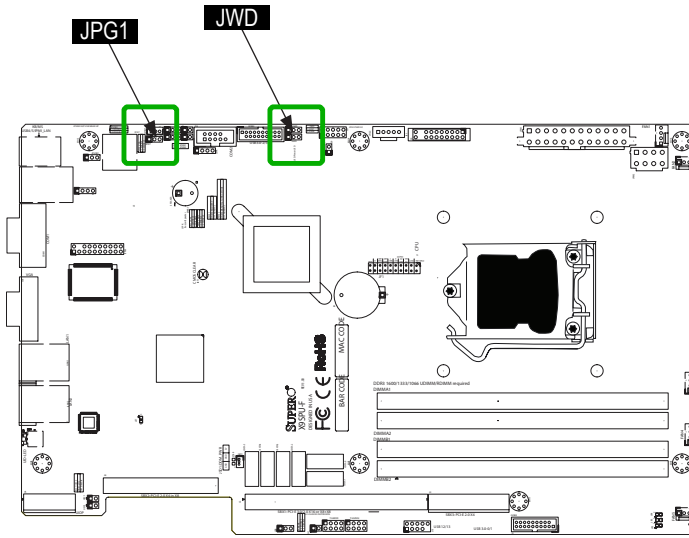

BMC Enable/Disable (JPB)

JPB is used to enable or disable the BMC (Baseboard Management Control) chip and the onboard IPMI port. This jumper is used together with the IPMI settings in the BIOS. See the table on the right for the jumper settings.

BMC IPMI Enable/Disable (JPB) Jumper Settings	
Setting	Definition
Pins 1-2	Enabled (Default)
Pins 2-3	Disabled

USB Wake-Up (JPUSB1)

Use the jumper JPUSB1 to "wake-up" your system by pressing a key on a USB keyboard or clicking the USB mouse connected to the backpanel USB Ports 4/5. JPUSB1 is used together with a USB Wake-Up feature in the BIOS. Enable this jumper and the USB support in the BIOS to wake up your system via USB devices.

Note: When the USB is set to Enabled in the BIOS, and JPUSB1 is set to Disabled, remove the USB devices from backpanel USB Ports 0/1 before the system goes into the standby mode.

JPUSB1 (Backplane USB 0/1 Wake-up Enable)	
Pin#	Definition
1-2	Enabled (Default)
2-3	Disabled

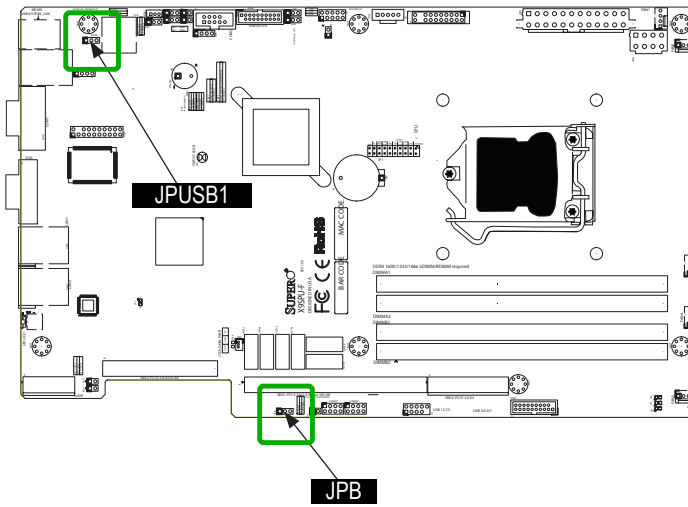

ME Recovery (JPME1)

ME Recovery (JPME1) is used to enable or disable the ME Recovery feature of the motherboard. This jumper will reset Intel ME values back to their default settings.

ME Recovery (JPME1) Jumper Settings	
Setting	Definition
Pins 1-2	Normal (Default)
Pins 2-3	Force Update

ME Manufacturing Mode

ME Manufacturing Mode (JPME2) is used to enable or disable the ME Manufacturing Mode feature of the motherboard. This jumper will allow the system to boot to the Intel ME diagnostic mode for troubleshooting and other purposes.

ME Recovery (JPME2) Jumper Settings	
Setting	Definition
Pins 1-2	Normal (Default)
Pins 2-3	ME Mode

x16 PCI Setting (JRF1)

JRF1 is used to configure the x16 PCIe slot on the motherboard to function as x16 or split the bus to x8 + x8. See the table on the right for the jumper settings.

x16 PCI Setting (JRF1) Jumper Settings	
Setting	Definition
Pins 1-2	Auto (Default)
Pins 2-3	Force x8 + x8

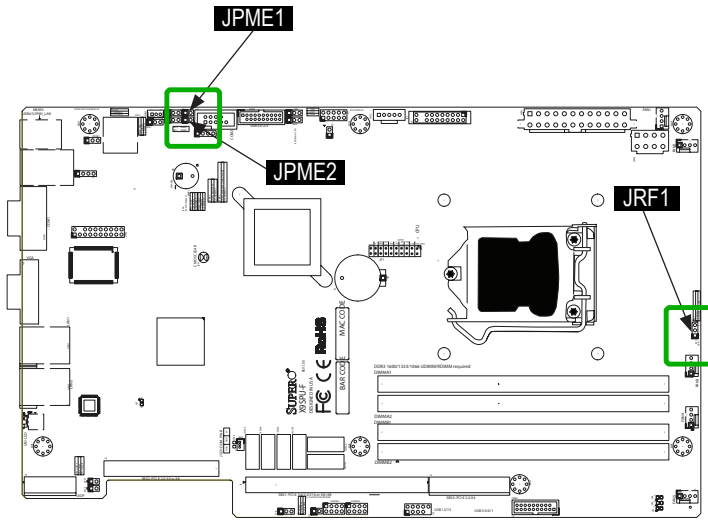

2-8 Onboard Indicators

LAN Port LEDs

The LAN ports are located on the I/O back panel of the motherboard. Each Ethernet LAN port has two LEDs. The yellow LED indicates activity, while the Link LED may be green, amber, or off to indicate the speed of the connections. On the IPMI port, the yellow LED on the right indicates activity, while the green LED on the left indicates the speed of the connection. See the table at right for more information. See the tables at right for more information.

LAN Link LEDs (Green/Amber/Off)	
LED Color	Definition
Off	No Connection or 10 Mbps
Green	100 Mbps
Amber	1 Gbps

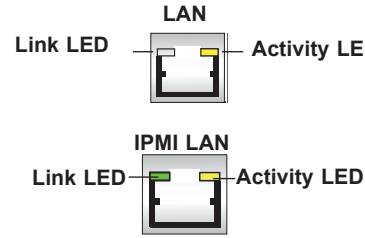

Standby Power (LE4)

The Standby Power LED is located at LE4 on the motherboard. When LE4 is on, it means that the AC power cable is connected and the power supply hard switch is on, indicating that power is flowing through the power supply and into the motherboard. The system may or may not be running.

Standby PWR LED (LE4) LED Status	
Status	Definition
Off	System unplugged or power supply is switched off
On	Standby Power On

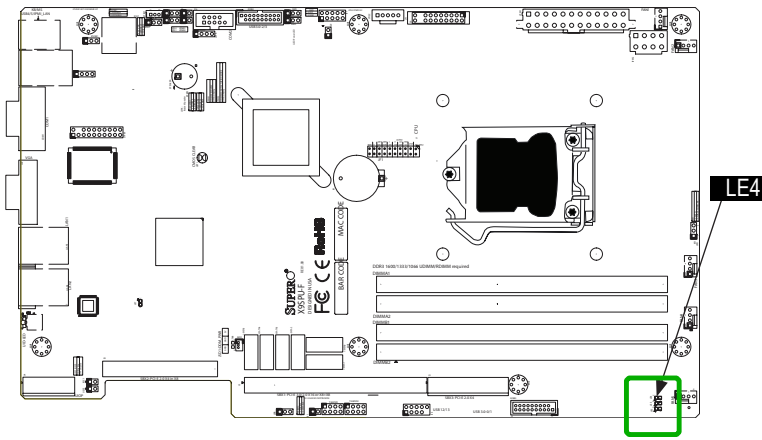

IPMI Heartbeat LED (LE7)

An IPMI Heartbeat LED is located at LE7. When LE7 blinks, it means that IPMI is enabled and functioning properly.

IPMI Heartbeat LED (LE7) LED Settings	
Green: Blinking	IPMI is ready for use
Off	IPMI Disabled

Unit ID LED (LE5)

The Unit ID LED is used to indicate that the Unit ID switch has been activated. Please see pages 2-16 and 2-19 for details.

Unit ID LED (LE5) LED Settings	
Blue: Steady	Unit ID Switch is On
Off	Unit ID Switch is Off

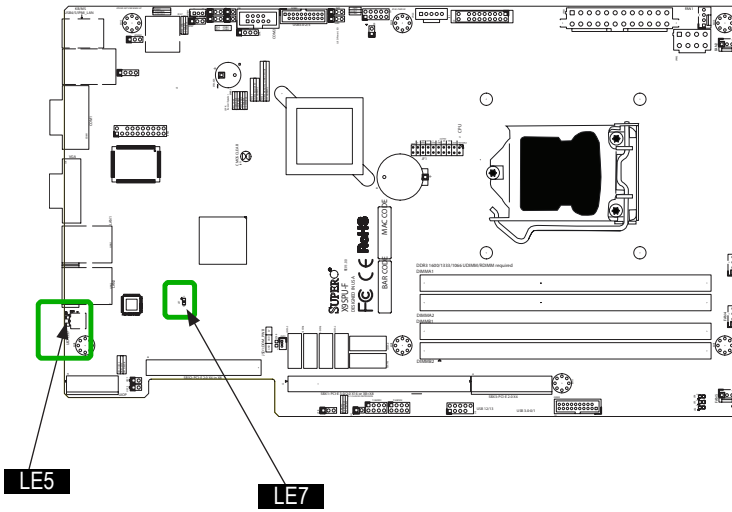

2-9 SATA Connections

SATA Connections (I-SATA0~5)

Six Serial ATA (SATA) connectors (I-SATA 0~5) are located on the motherboard. I-SATA 0/1 supports data transfer rates of up to 6Gb/s (SATA 3.0), while I-SATA 2~5 supports data transfer rates of up to 3Gb/s (SATA 2.0). Please see the pin definitions on the right table.

SATA 2.0/3.0 Connectors Pin Definitions	
Pin#	Signal
1	Ground
2	SATA_TXP
3	SATA_TXN
4	Ground
5	SATA_RXN
6	SATA_RXP
7	Ground

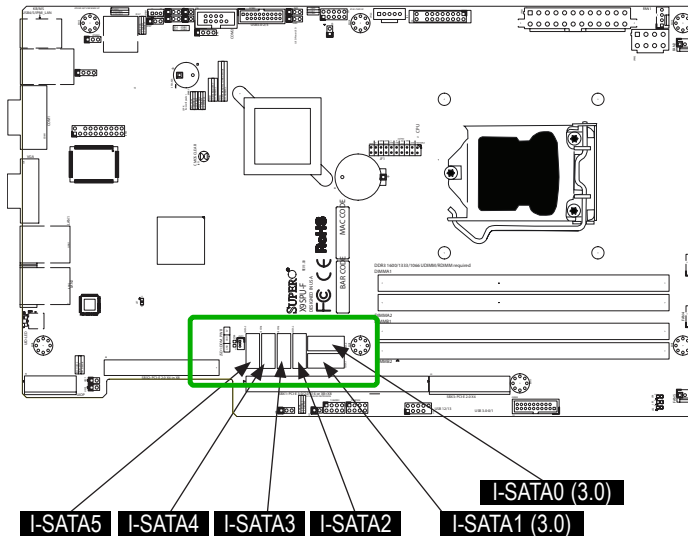

2-10 Expansion Slots

The X9SPU-F motherboard's expansion slots require proprietary riser cards when installed in a server chassis. Please refer to Supermicro's website at http://www.supermicro.com for availability of these riser cards.

Universal I/O Slot (UIO RISER)

Insert a UIO riser card to this slot to gain external access to the motherboard's I/O devices. Please ask for P/N:

PCI-E 2.0 x4 Slot (SBX2)

Insert a PCI-E riser card to this slot. Please use P/N:

PCI-E 3.0 x16 and PCI-E 2.0 x4 Slot (SBX1 and SBX3)

Insert a PCI-E riser card to this slot. Please use P/N: RSC-R1UU-3E8-CS045

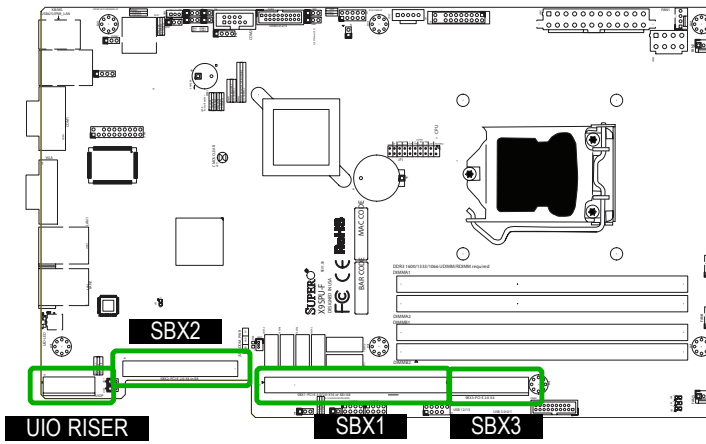

Chapter 3

Troubleshooting

3-1 Troubleshooting Procedures

Use the following procedures to troubleshoot your system. If you have followed all of the procedures below and still need assistance, refer to the 'Technical Support Procedures' and/or 'Returning Merchandise for Service' section(s) in this chapter. Always disconnect the AC power cord before adding, changing or installing any hardware components.

Before Power On

1. Make sure that the Standby is not on. (**Note:** If it is on, the onboard power is on. Be sure to unplug the power cable before installing or removing the components.)

2. Make sure that there are no short circuits between the motherboard and chassis.

3. Disconnect all ribbon/wire cables from the motherboard, including those for the keyboard and mouse. Also, be sure to remove all add-on cards.

4. Install a CPU and heatsink (-be sure that it is fully seated) and then connect the chassis speaker and the power LED to the motherboard. Check all jumper settings as well.

No Power

1. Make sure that there are no short circuits between the motherboard and chassis.

2. Make sure that all jumpers are set to their default positions.

3. Check if the 115V/230V switch on the power supply is properly set.

4. Turn the power switch on and off to test the system.

5. The battery on your motherboard may be old. Check to make sure that it still supplies ~3VDC. If it does not, replace it with a new one.

No Video

1. If the power is on, but you have no video--in this case, you will need to remove all the add-on cards and cables first.

2. Use the speaker to determine if any beep codes exist. (Refer to Appendix A for details on beep codes.)

3. Remove all memory modules and turn on the system. (If the alarm is on, check the specs of memory modules, reset the memory or try a different one.)

Memory Errors

1. Make sure that the DIMM modules are properly installed and fully seated in the slots.

2. You should be using memory recommended by Supermicro (see Section 2-3). Also, it is recommended that you use the memory modules of the same type and speed for all DIMMs in the system. Do not use memory modules of different sizes, different speeds and different types on the same motherboard.

3. Check for bad DIMM modules or slots by swapping modules between slots to see if you can locate the faulty ones.

4. Check the switch of 115V/230V power supply.

When You Lose the System's Setup Configuration

1. Please be sure to use a high quality power supply. A poor quality power supply may cause the system to lose CMOS setup information. Refer to Section 1-5 for details on recommended power supplies.

2. The battery on your motherboard may be old. Check to verify that it still supplies ~3VDC. If it does not, replace it with a new one.

3. If the above steps do not fix the Setup Configuration problem, contact your vendor for repairs.

3-2 Technical Support Procedures

Before contacting Technical Support, please make sure that you have followed all the steps listed below. Also, Note that as a motherboard manufacturer, Supermicro does not sell directly to end users, so it is best to first check with your distributor or reseller for troubleshooting services. They should know of any possible problem(s) with the specific system configuration that was sold to you.

1. Please go through the 'Troubleshooting Procedures' and 'Frequently Asked Question' (FAQ) sections in this chapter or see the FAQs on our website (http://www.supermicro.com/support/faqs/) before contacting Technical Support.

2. BIOS upgrades can be downloaded from our website at (http://www.supermicro.com/support/bios/).

   Note: Not all BIOS can be flashed. Some cannot be flashed; it depends on the boot block code of the BIOS.

3. If you've followed the instructions above to troubleshoot your system, and still cannot resolve the problem, then contact Supermicro's technical support and provide them with the following information:

- Motherboard model and PCB revision number
- BIOS release date/version (this can be seen on the initial display when your system first boots up)
- System configuration
- An example of a Technical Support form is on our website at (http://www.supermicro.com/support/contact.cfm).

4. Distributors: For immediate assistance, please have your account number ready when placing a call to our technical support department. We can be reached by e-mail at support@supermicro.com, by phone at: (408) 503-8000, option 2, or by fax at (408)503-8019.

3-3 Frequently Asked Questions

Question: What type of memory does my motherboard support?

Answer: Please see Section 2-3 for a comprehensive answer.

Question: How do I update my BIOS?

Answer: It is recommended that you **do not** upgrade your BIOS if you are not experiencing any problems with your system. Updated BIOS files are located on our website at http://www.supermicro.com/support/bios/. Please check our BIOS warning message and the information on how to update your BIOS on our web site. Select your motherboard model and download the BIOS ROM file to your computer. Also, check the current BIOS revision to make sure that it is newer than your BIOS before downloading. Please unzip the BIOS file onto a bootable device or a USB pen/thumb drive. To flash the BIOS, run the batch file named "ami.bat" with the new BIOS ROM file from your bootable device or USB pen/thumb drive. Use the following format:

F:\> ami.bat BIOS-ROM-filename.xxx <Enter>

Note: Always use the file named "ami.bat" to update the BIOS, and insert a space between "ami.bat" and the filename. The BIOS-ROM-filename will bear the motherboard name (i.e., X9SPU) and build version as the extension. For example, "X9SPU1.218". When completed, your system will automatically reboot.

When the BIOS flashing screen is completed, the system will reboot and will show "Press F1 or F2". At this point, you will need to load the BIOS defaults. Press <F1> to go to the BIOS setup screen, and press <F3> to load the default settings. Next, press <F4> to save and exit. The system will then reboot.

Warning: Do not shut down or reset the system while updating the BIOS to prevent possible system boot failure!

Note: The SPI BIOS chip installed on this motherboard is not removable. To repair or replace a damaged BIOS chip, please send your motherboard to RMA at Supermicro for service.

Question: I think my BIOS is corrupted. How can I recover my BIOS?

Answer: Please see Appendix C-BIOS Recovery for detailed instructions.

Question: What's on the CD that came with my motherboard?

Answer: The supplied compact disc has quite a few drivers and programs that will greatly enhance your system. We recommend that you review the CD and install the applications you need. Applications on the CD include chipset drivers for Windows, security programs, and audio drivers.

Question: Why do I get an error message “IASTOR.SYS read error” and "press F6 to install Intel RAID driver" when installing Windows on my motherboard?

Answer: To solve this issue, disable the IPMI jumper (if your motherboard has this feature). Another solution is to use a USB floppy drive instead of the onboard floppy drive. For the IPMI jumper location, please check Chapter 1.

Question: What is the heatsink part number for my X9SPU-F Series motherboard?

Answer: For the 1U passive heatsink, ask for SNK-P0046P (back plate is included). For the 2U active heatsink, use SNK-P0046A4.

Question: Why can't I recover the BIOS even when I’ve followed the instructions in the user’s manual for the motherboard?

Answer: Please disable the IPMI jumper and try it again. For the jumper location, please check Chapter 1.

3-4 Battery Removal and Installation

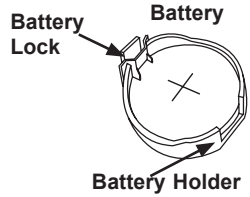

Battery Removal

To remove the onboard battery, follow the steps below:

1. Power off your system and unplug your power cable.
2. Locate the onboard battery as shown below.
3. Using a tool such as a pen or a small screwdriver, push the battery lock outwards to unlock it. Once unlocked, the battery will pop out from the holder.
4. Remove the battery.

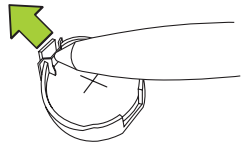

Proper Battery Disposal

Warning! Please handle used batteries carefully. Do not damage the battery in any way; a damaged battery may release hazardous materials into the environment. Do not discard a used battery in the garbage or a public landfill. Please comply with the regulations set up by your local hazardous waste management agency to dispose of your used battery properly.

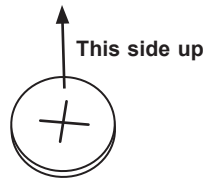

Battery Installation

1. To install an onboard battery, follow the steps 1& 2 above and continue below:
2. Identify the battery's polarity. The positive (+) side should be facing up.
3. Insert the battery into the battery holder and push it down until you hear a click to ensure that the battery is securely locked.

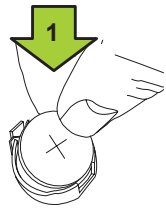

Press down until you hear a click.

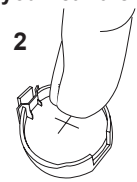

Warning: When replacing a battery, be sure to only replace it with the same type.

3-5 Returning Merchandise for Service

A receipt or copy of your invoice marked with the date of purchase is required before any warranty service will be rendered. You can obtain service by calling your vendor for a Returned Merchandise Authorization (RMA) number. For faster service, you may also obtain RMA authorizations online (http://www.supermicro.com/support/rma/). When you return the motherboard to the manufacturer, the RMA number should be prominently displayed on the outside of the shipping carton, and mailed prepaid or hand-carried. Shipping and handling charges will be applied for all orders that must be mailed when service is complete.

This warranty only covers normal consumer use and does not cover damages incurred in shipping or from failure due to the alteration, misuse, abuse or improper maintenance of products.

During the warranty period, contact your distributor first for any product problems.

Notes

Chapter 4

BIOS

4-1 Introduction

This chapter describes the AMI BIOS Setup Utility for the X9SPU-F Motherboard. The AMI ROM BIOS is stored in a Flash EEPROM and can be easily updated. This chapter describes the basic navigation of the AMI BIOS Setup Utility setup screens.

Note: For instructions on BIOS recovery, please refer to the instruction guide posted at http://www.supermicro.com/support/manuals/.

Starting BIOS Setup Utility

To enter the AMI BIOS Setup Utility screens, press the <Delete> key while the system is booting up.

Note: In most cases, the <Delete> key is used to invoke the AMI BIOS setup screen. There are a few cases when other keys are used, such as <F1>, <F2>, etc.

Each main BIOS menu option is described in this manual. The Main BIOS setup menu screen has two main frames. The left frame displays all the options that can be configured. Grayed-out options cannot be configured. Options in blue can be configured by the user. The right frame displays the key legend. Above the key legend is an area reserved for a text message. When an option is selected in the left frame, it is highlighted in white. Often a text message will accompany it. (**Note**: the AMI BIOS has default text messages built in. Supermicro retains the option to include, omit, or change any of these text messages.)

The AMI BIOS Setup Utility uses a key-based navigation system called "hot keys". Most of the AMI BIOS setup utility "hot keys" can be used at any time during the setup navigation process. These keys include <F1>, <F10>, <Enter>, <ESC>, arrow keys, etc.

Note: Options printed in **Bold** are default settings.

How To Change the Configuration Data

The configuration data that determines the system parameters may be changed by entering the AMI BIOS Setup utility. This Setup utility can be accessed by pressing <Del> at the appropriate time during system boot.

How to Start the Setup Utility

Normally, the only visible Power-On Self-Test (POST) routine is the memory test. As the memory is being tested, press the <Delete> key to enter the main menu of the AMI BIOS Setup Utility. From the main menu, you can access the other setup screens. An AMI BIOS identification string is displayed at the left bottom corner of the screen, below the copyright message.

Warning! Do not upgrade the BIOS unless your system has a BIOS-related issue. Flashing the wrong BIOS can cause irreparable damage to the system. In no event shall Supermicro be liable for direct, indirect, special, incidental, or consequential damages arising from a BIOS update. If you have to update the BIOS, do not shut down or reset the system while the BIOS is updating. This is to avoid possible boot failure.

4-2 Main Setup

When you first enter the AMI BIOS Setup Utility, you will enter the Main setup screen. You can always return to the Main setup screen by selecting the Main tab on the top of the screen. The Main BIOS Setup screen is shown below.

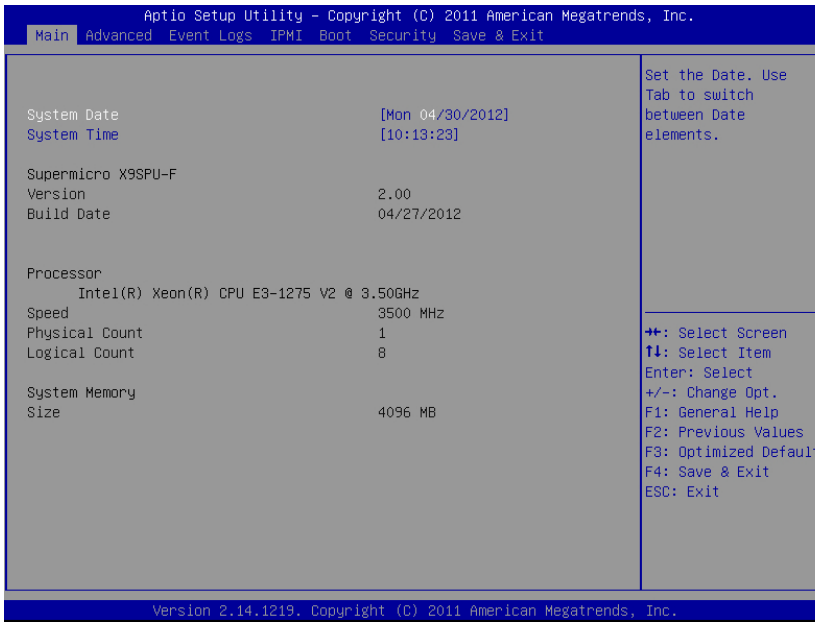

System Overview: The following BIOS information will be displayed:

System Time/System Date

Use this option to change the system time and date. Highlight *System Time* or *System Date* using the arrow keys. Enter new values through the keyboard. Press the <Tab> key or the arrow keys to move between fields. The date must be entered in Day MM/DD/YY format. The time is entered in HH:MM:SS format. (**Note:** The time is in the 24-hour format. For example, 5:30 P.M. appears as 17:30:00.)

Supermicro X9SPU-F

Version: This item displays the version of the BIOS used in the system.

Build Date: This item displays the day this version of BIOS was built.

Processor

This displays the processor type, speed, physical count, and logical count.

System Memory

This displays the size of memory available in the system.

4-3 Advanced Setup Configurations

Use the arrow keys to select Boot Setup and hit <Enter> to access the submenu items.

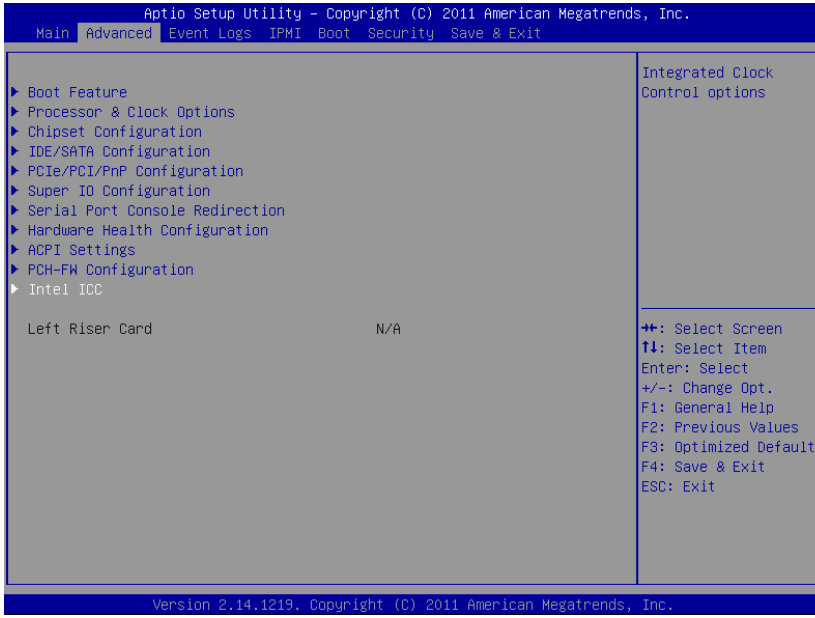

▶BOOT Feature

Quiet Boot

This option allows the bootup screen options to be modified between POST messages or the OEM logo. Select Disabled to display the POST messages. Select Enabled to display the OEM logo instead of the normal POST messages. The options are **Enabled** and Disabled.

AddOn ROM Display Mode

This sets the display mode for Option ROM. The options are **Force BIOS** and Keep Current.

Bootup Num-Lock

This feature selects the Power-on state for Numlock key. The options are Off and **On**.

Wait For 'F1' If Error

This forces the system to wait until the 'F1' key is pressed if an error occurs. The options are Disabled and **Enabled**.

Interrupt 19 Capture

Interrupt 19 is the software interrupt that handles the boot disk function. When this item is set to Immediate, the ROM BIOS of the host adaptors will "capture" Interrupt 19 at boot and allow the drives that are attached to these host adaptors to function as bootable disks. If this item is set to Postponed, the ROM BIOS of the host adaptors will not capture Interrupt 19, and the drives attached to these adaptors will not function as bootable devices. The options are **Immediate** and Postponed.

Watch Dog Function

If enabled, the Watch Dog Timer will allow the system to reboot when it is inactive for more than 5 minutes. The options are Enabled and **Disabled.**

Power Button Function

This feature controls how the system shuts down when the power button is pressed. Select 4-Seconds Override to force the user to press and hold the Power Button for 4 seconds before the system turns off. Select Instant Off if you want the system to instantly power off when the Power Button is pressed. The options are 4 Seconds Override and **Instant Off.**

Restore on AC Power Loss

Use this feature to set the power state after a power outage. Select Stay Off for the system power to remain off after a power loss. Select Power On for the system power to be turned on after a power loss. Select Last State to allow the system to resume its last state before a power loss. The options are Power On, Stay Off and **Last State**.

DeepSx Power Policies

Select Enabled to enable Deep Sleep State support. The settings are Enabled and **Disabled.**

▶Processor and Clock Options

Warning: Take Caution when changing the Advanced settings. An incorrect value, a very high DRAM frequency or incorrect DRAM timing may cause system to become unstable. When this occurs, revert to the default setting.

CPU Configuration

This item is for informational purposes only and displays CPU configuration information including type, frequency, data cache, etc.

Clock Spread Spectrum

Select Enable to use the feature of Clock Spectrum, which will allow the BIOS to monitor and attempt to reduce the level of Electromagnetic Interference caused by the components whenever needed. Select Disabled to enhance system stability. The options are **Disabled** and Enabled.

Hardware Prefetcher (Available when supported by the CPU)

If set to Enabled, the hardware pre fetcher will pre fetch streams of data and instructions from the main memory to the L2 cache in the forward or backward manner to improve CPU performance. The options are Disabled and **Enabled**.

Adjacent Cache Line Prefetch (Available when supported by the CPU)

The CPU fetches the cache line for 64 bytes if this option is set to Disabled. The CPU fetches both cache lines for 128 bytes as comprised if **Enabled**.

Intel® Virtualization Technology (Available when supported by the CPU)

Select Enabled to use the feature of Virtualization Technology to allow one platform to run multiple operating systems and applications in independent partitions, creating multiple "virtual" systems in one physical computer. The options are **Enabled** and Disabled. **Note**: If there is any change to this setting, you will need to power off and restart the system for the change to take effect. Please refer to Intel's web site for detailed information.

Execute-Disable Bit Capability (Available when supported by the OS and the CPU)

Set to Enabled to enable the Execute Disable Bit which will allow the processor to designate areas in the system memory where an application code can execute and where it cannot, thus preventing a worm or a virus from flooding illegal codes to overwhelm the processor or damage the system during an attack. The default is **Enabled**. (Refer to Intel and Microsoft Web Sites for more information.)

Intel® AES-NI

Set to Enabled to use the processor's Advanced Encryption Standard (AES) feature. The options are Enabled and **Disabled**.

Intel® Hyper Threading Technology

Set to Enabled to use the processor's Hyper Threading Technology feature. The options are **Enabled** and Disabled.

Active Processor Cores

Set to Enabled to use a processor's Second Core and beyond. (Please refer to Intel's web site for more information.) The options are **All,** 1, 2, 3.

Power Technology

This feature determines what power-saving scheme the motherboard uses. The options are Disable, **Energy Efficient** and Custom. If Custom is selected, the following options become available:

EIST

EIST (Enhanced Intel SpeedStep Technology) allows the system to automatically adjust processor voltage and core frequency in an effort to reduce power consumption and heat dissipation. **Please refer to Intel's web site for detailed information.** The options are Disabled and Enabled.

CPU C3 Report, CPU C6, Report, CPU C7 Report

This BIOS feature enables or disables C3 (ACPI C2), C6 (ACPI C3) and C7 (ACPI C3) reporting to the operating system. The options are Disabled and **Enabled**.

C1E

Select Enabled to use the "Enhanced Halt State" feature. C1E significantly reduces the CPU's power consumption by reducing the CPU's clock cycle and voltage during a "Halt State." The options are Disabled and **Enabled**.

▶Turbo Boost Technology

Turbo Mode

This feature allows processor cores to run faster than marked frequency in specific conditions. The options are Disabled and **Enabled.**

Long duration power limit - this is the processor power consumption limit (in Watts) during a long duration time window.

Long duration maintained - this is the time in milliseconds where the Long Duration Power Limit is maintained.

Short duration power limit - during Turbo Mode, the system may exceed the processor's default power setting and exceed the Short Duration Power limit. By increasing this value, the processor can provide better performance for a short duration.

▶Chipset Configuration

WARNING: Setting the wrong values in the following sections may cause the system to malfunction.

▶CPU Bridge Configuration

This item displays the current processor configuration, including the frequency and memory type.

Memory Frequency

Use this option to force the system memory to run at a different frequency than the default frequency. The available options are **Auto**, Force DDR-1066, Force DDR-1333, and Force DDR3-1600.

▶Integrated IO Configuration

This item displays the current IO chipset Revision.

Intel® VT-d

Select Enabled to enable Intel's Virtualization Technology support for Direct I/O VT-d by reporting the I/O device assignments to VMM through the DMAR ACPI Tables. This feature offers fully-protected I/O resource-sharing across the Intel platforms, providing the user with greater reliability, security and availability in networking and data-sharing. The settings are Enabled and **Disabled**.

Active State Power Management

Set this item to the desired ASPM (Active State Power Management) level. The options are **Disabled,** Auto, and Force L0s.

PCIe Maximum Read Request

This feature selects the setting for the PCIE maximum Read Request size. The options are **Auto,** 128 Bytes**,** 256 Bytes, 512 Bytes, 1024 Bytes, 2048 Bytes, and 4096 Bytes**.**

PCI Express Port

This feature enables or disables the PCI Express port. The options are Disabled, Enabled and **Auto.**

PCI Express Port - Gen X

This feature selects the speed of the PCI Express port. The options are **Auto**, Gen1, Gen2, and Gen3.

▶South Bridge Configuration

This item displays the current South Bridge Revision.

USB Functions

This feature allows the user to decide the number of onboard USB ports to be enabled. The Options are: Disabled and **Enabled**.

USB 3.0 Functions

This feature allows the user to decide the number of onboard USB 3.0 ports to be enabled. The Options are: Disabled and **Enabled**.

Legacy USB Support

This feature enables support for legacy USB devices. Select Auto to disable legacy support if USB devices are not present. Select Disable to have USB devices available only for EFI applications. The options are **Enabled,** Disabled and Auto.

Port 60/64 Emulation

This feature enables I/O port 60h/64h emulation support. This should be enabled for complete USB keyboard legacy support for non-USB aware Operating Systems. The options are **Enabled,** and Disabled.

BIOS EHCI Hand-Off

This item is for Operating Systems that does not support Enhanced Host Controller Interface (EHCI) hand-off. When enabled, EHCI ownership change will be claimed by the EHCI driver. The settings are **Enabled** and Disabled.

▶IDE/SATA Configuration

When this submenu is selected, the AMI BIOS automatically detects the presence of the SATA Devices and displays the following items:

SATA Mode

This item selects the mode for the installed drives. The options are Disabled, IDE Mode, **AHCI Mode** and RAID Mode. The following are displayed depending on your selection:

IDE Mode

The following items are displayed when IDE Mode is selected:

Serial ATA Port 0~5

This item displays the information detected on the installed SATA drives on the particular SATA port.

AHCI Mode

The following items are displayed when AHCI Mode is selected:

Aggressive Link Power Management

This feature Enables or Disables Aggressive Link Power Management support for Cougar Point B0 stepping and later. The options are **Enabled** and Disabled.

Serial ATA Port 0~5 Hot Plug

Set this item to Enabled to enable hot-plugging for the particular port. The options are **Enabled** and Disabled.

Serial ATA Port 0~5 Staggered Spin Up

Set this item to Enabled to enable Staggered Spin-up support. The options are Enabled and **Disabled**.

RAID Mode

The following items are displayed when RAID Mode is selected:

Serial ATA Port 0~5 Hot Plug

Set this item to Enabled to enable hot-plugging for the particular port. The options are **Enabled** and Disabled.

▶PCIe/PCI/PnP Configuration

This feature allows the user to set the PCI/PnP configurations for the following items:

PCI Latency Timer

This feature sets the latency Timer of each PCI device installed on a PCI bus. Select 64 to set the PCI latency to 64 PCI clock cycles. The options are 32 PCI Bus Clocks, **64 PCI Bus Clocks**, 96 PCI Bus Clocks, 128 PCI Bus Clocks, 160 PCI Bus Clocks, 192 PCI Bus Clocks, 224 PCI Bus Clocks and 248 PCI Bus Clocks.

Above 4G Decoding

Set this item to Enabled to activate 64-bit capable devices to be decoded above the 4G address space. This works only if the system supports 64-bit PCI decoding. The options are Enabled and **Disabled**.

Onboard LAN Option ROM Select

This feature selects whether to load the iSCSI or PXE onboard LAN option ROM. The options are iSCSI and **PXE**.

Load Onboard LAN1 Option ROM / Load Onboard LAN2 Option ROM

This feature is to enable or disable the onboard option ROMs. The default for LAN 1 is **Enabled**. The default for LAN 2 is **Disabled**.

Boots Graphic Adapter Priority

This option allows the user to specify which graphics controller to be used as the primary boot device. The options are Onboard and **Offboard**.

▶Super IO Configuration

Serial Port 1

Select Enabled to enable the onboard serial port. The options are **Enabled** and Disabled.

Serial Port 1 Settings

This option specifies the base I/O port address and the Interrupt Request address of the serial port. The options for Serial Port 1 are listed below.

Auto,

IO=3F8h; IRQ=4;

IO=3F8h; IRQ=3, 4, 5, 6, 7, 10, 11, 12;

IO=2F8h; IRQ=3, 4, 5, 6, 7, 10, 11, 12;

IO=3E8h; IRQ=3, 4, 5, 6, 7, 10, 11, 12;

IO=2E8h; IRQ=3, 4, 5, 6, 7, 10, 11, 12;

Serial Port 2

Select Enabled to enable the onboard serial port. The options are **Enabled** and Disabled.

Serial Port 2 Settings

This option specifies the base I/O port address and the Interrupt Request address of the serial port. The options for Serial Port 2 are listed below.

Auto,

IO=2F8h; IRQ=3;

IO=3F8h; IRQ=3, 4, 5, 6, 7, 10, 11, 12;

IO=2F8h; IRQ=3, 4, 5, 6, 7, 10, 11, 12;

IO=3E8h; IRQ=3, 4, 5, 6, 7, 10, 11, 12;

IO=2E8h; IRQ=3, 4, 5, 6, 7, 10, 11, 12;

▶Serial Port Console Redirection

These submenus allow the user to configure Console Redirection settings.

COM 1, COM2, SOL

Console Redirection

Select Enabled to use a COM Port selected by the user for Console Redirection. The options are Enabled and Disabled. (The default setting for COM1 and COM2 is **Disabled**. The default setting for SOL is **Enabled**.)

▶Console Redirection Settings

This feature allows the user to specify how the host computer will exchange data with the client computer, which is the remote computer used by the user.

Terminal Type

This feature allows the user to select the target terminal emulation type for Console Redirection. Select VT100 to use the ASCII character set. Select VT100+ to add color and function key support. Select ANSI to use the extended ASCII character set. Select VT-UTF8 to use UTF8 encoding to map Unicode characters into one or more bytes. The options are ANSI, VT100, **VT100+**, and VT-UTF8.

Bits Per Second

This item sets the transmission speed for a serial port used in Console Redirection. Make sure that the same speed is used in the host computer and the client computer. A lower transmission speed may be required for long and busy lines. The options are 9600, 19200, 38400, 57600, and **115200** (bits per second).

Data Bits

Use this feature to set the data transmission size for Console Redirection. The options are 7 and **8** (Bits).

Parity

A parity bit can be sent along with regular data bits to detect data transmission errors. Select Even if the parity bit is set to 0, and the number of 1's in data bits is even. Select Odd if the parity bit is set to 0, and the number of 1's in data bits is odd. Select None if you do not want to send a parity bit with your data bits in transmission. Select Mark to add mark as a parity bit to be sent along with the data bits. Select Space to add a Space as a parity bit to be sent with your data bits. The options are **None**, Even, Odd, Mark, and Space.

Stop Bits

A stop bit indicates the end of a serial data packet. Select 1 Stop Bit for standard serial data communication. Select 2 Stop Bits if slower devices are used. The options are **1** and 2.

Flow Control

This feature allows the user to set the flow control for Console Redirection to prevent data loss caused by buffer overflow. Send a "Stop" signal to stop sending data when the receiving buffer is full. Send a "Start" signal to start sending data when the receiving buffer is empty. The options are **None** and Hardware RTS/CTS.

VT-UTF8 Combo Key Support

Select Enabled to enable VT-UTF8 Combination Key support for ANSI/VT100 terminals. The options are **Enabled** and Disabled.

Recorder Mode

Select Enabled to capture the data displayed on a terminal and send it as text messages to a remote server. The options are **Disabled** and Enabled.

Resolution 100x31

Select Enabled for extended-terminal resolution support. The options are Disabled and **Enabled**.

Legacy OS Redirection Resolution

Use this feature to select the number of rows and columns used in Console Redirection for legacy OS support. The options are 80x24 and **80x25**.

Putty Keypad

Use this feature to select function key and keypad setting on Putty. The options are **VT100**, LINUX, XTERMR6, SCO, ESCN, and VT400.

Serial Port for Out-of-Band Management/Windows Emergency Management Services (EMS)

This item allows the user to configure Console Redirection settings to support Out-of-Band Serial Port management.

Console Redirection (for EMS)

Select Enabled to use a COM Port selected by the user for Console Redirection. The options are **Enabled** and Disabled.

▶Console Redirection Settings (for EMS)

This feature allows the user to specify how the host computer will exchange data with the client computer, which is the remote computer used by the user.

Out-of-Band-Mgmt Port

Use this feature to select the port for out-of-band management. The options are **COM1**, COM2, and SOL.

Terminal Type

This feature allows the user to select the target terminal emulation type for Console Redirection. Select VT100 to use the ASCII character set. Select VT100+ to add color and function key support. Select ANSI to use the extended ASCII character set. Select VT-UTF8 to use UTF8 encoding to map Unicode characters into one or more bytes. The options are ANSI, VT100, VT100+, and **VT-UTF8**.

Bits Per Second

This item sets the transmission speed for a serial port used in Console Redirection. Make sure that the same speed is used in the host computer and the client computer. A lower transmission speed may be required for long and busy lines. The options are 9600, 19200, 57600, and **115200** (bits per second).

Flow Control

This feature allows the user to set the flow control for Console Redirection to prevent data loss caused by buffer overflow. Send a "Stop" signal to stop sending data when the receiving buffer is full. Send a "Start" signal to start sending data when the receiving buffer is empty. The options are **None,** Hardware RTS/CTS, and Software Xon/Xoff.

▶Hardware Health Configuration

Fan Speed Control Mode

This feature allows the user to decide how the system controls the speeds of the onboard fans. The CPU temperature and the fan speed are correlative. When the CPU on-die temperature increases, the fan speed will also increase for effective system cooling. Select "Full Speed" to allow the onboard fans to run at full speed (of 100% Pulse Width Modulation Duty Cycle) for maximum cooling. This setting is recommended for special system configuration or debugging. Select "Standard" for the onboard fans to run at 50% of the Initial PWM Cycle in order to balance the needs between system cooling and power saving. This setting is recommended for regular systems with normal hardware configurations. The options are Full Speed (@100% of PWM Cycle), and **Standard** (@50% of PWM Cycle).

CPU Temperature

The CPU temperature status displays as follows:

Low – This level is considered as the 'normal' operating state. The CPU temperature is well below the CPU 'Temperature Tolerance'. The motherboard fans and CPU will run normally as configured in the BIOS (Fan Speed Control).

User intervention: No action required.

Medium – The processor is running warmer. This is a 'precautionary' level and generally means that there may be factors contributing to this condition, but the CPU is still within its normal operating state and below the CPU 'Temperature Tolerance'. The motherboard fans and CPU will run normally as configured in the BIOS. The fans may adjust to a faster speed depending on the Fan Speed Control settings.

User intervention: No action is required. However, consider checking the CPU fans and the chassis ventilation for blockage.

High – The processor is running hot. This is a 'caution' level since the CPU's 'Temperature Tolerance' has been reached (or has been exceeded) and may activate an overheat alarm:

The information provided above is for your reference only. For more information on thermal management, please refer to Intel's Web site at www.intel.com.

System Temperature / Peripheral Temperature

This feature displays the system and peripheral device temperatures, as detected by the motherboard sensors.

Fan 1 ~ Fan 5 Speed

This feature displays the fan speed readings from fan interfaces Fan1 through Fan5.

VCORE, 12V, VDIMM, 5VCC, -12V, AVCC, 3.3VCC, VSB, VBAT

This feature displays the current voltages of the above voltage monitors.

▶ACPI Settings

Use this feature to configure Advanced Configuration and Power Interface (ACPI) power management settings for your system.

High Precision Event Timers

Select Enabled to activate the High Performance Event Timer (HPET) that produces periodic interrupts at a much higher frequency than a Real-time Clock (RTC) does in synchronizing multimedia streams, providing smooth playback and reducing the de-

pendency on other timestamp calculation devices, such as an x86 RDTSC Instruction embedded in the CPU. The High Performance Event Timer is used to replace the 8254 Programmable Interval Timer. The options are **Enabled** and Disabled.

Suspend Mode

This setting allows you to configure the ACPI (Advanced Configuration and Power Interface) sleep state for your system when it is in the Suspend mode. The options are Suspend Disabled, and **S1 (POS)**.

WHEA Support

This feature Enables the Windows Hardware Error Architecture (WHEA) support for the Windows 2008 operating system (and later versions). The options are **Enabled** and Disabled.

▶PCH-FW Configuration

This item displays the Management Engine subsystem information and parameters.

MDES BIOS Status Code

This item enables the MDES BIOS status code. The options are **Disabled** and Enabled.

▶Firmware Update Configuration

Me FW Image Re-Flash

Use this item to enable the ME image re-flash function. The options are **Disabled** and Enabled.

▶Intel ICC

Use this feature to configure Integrated Clock Control (ICC) options.

Use Watchdog Timer for ICC

This feature enables watchdog timer operation for ICC. If set to Enabled, watchdog timer will be started after ICC-related changes. This watchdog timer will detect platform instability caused by wrong clock settings. The options are **Disabled** and Enabled.

Turn off unused PCI/PCIe clocks

When set to Disabled, all unused PCI/PCIe clocks will remain turned on. When set to Enabled, clocks for empty PCI/PCIe slots will be turned off to save power. Changes will take effect at next system boot. The options are **Enabled** and Disabled.

Lock ICC registers

When set to All registers, all ICC registers will be locked. When set to Static only, only static ICC registers will be locked. The options are All registers and **Static only**.

4-4 Event Logs

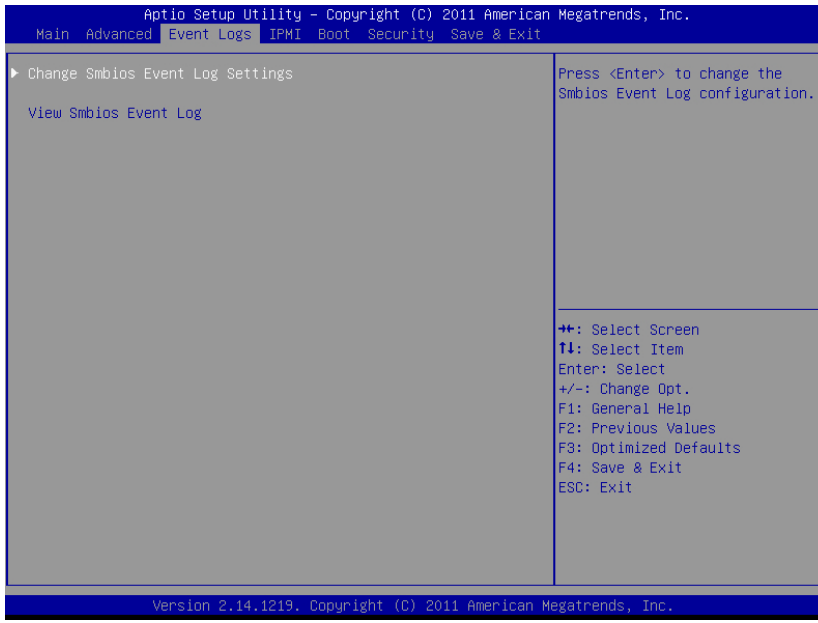

▶Change SmBIOS Event Log Settings

Smbios Event Log

Change this item to enable or disable all features of the Smbios Event Logging during boot. The options are **Enabled** and Disabled.

Erase Event Log

This option erases all logged events. The options are **No**, Yes, Next reset and Yes, Every reset.

When Log is Full

This option automatically clears the Event Log memory of all messages when it is full. The options are **Do Nothing** and Erase Immediately.

Log System Boot Event

This option toggles the System Boot Event logging to enabled or disabled. The options are **Disabled** and Enabled.

MECI

The Multiple Event Count Increment (MECI) counter counts the number of times a duplicate event must happen before the MECI counter is incremented. This is a numeric value. The default value is **1**.

METW

The Multiple Event Time Window (METW) defines number of minutes must pass between duplicate log events before MECI is incremented. This is in minutes, from 0 to 99. The default value is **60**.

Log OEM Codes

Use this item to enable the logging of EFI Status Codes as OEM Codes. The options are Disabled and **Enabled**.

Convert OEM Codes

Set this item to enabled to convert EFI Status Codes to standard Smbios Types. The options are **Disabled** and Enabled.

View SmBIOS Event Log

This feature displays the contents of the SmBIOS Event Log.

4-5 IPMI Settings

Intelligent Platform Management Interface (IPMI) is a set of common interfaces that IT administrators can use to monitor system health and to manage the system as a whole. For more information on the IPMI specifications, please visit Intel's website at www.intel.com.

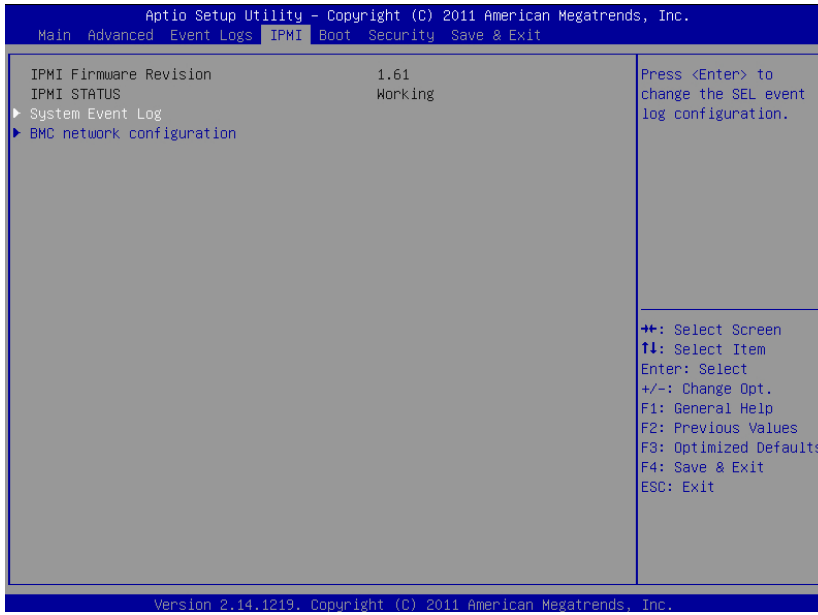

▶System Event Log

This feature is used to change the System Event Log (SEL) configuration.

SEL Components - Change this item to enable or disable all features of System Event Logging. The options are Enabled and **Disabled**. When Enabled, the following can be configured:

Erase SEL - This option erases all logged SEL events. The options are **No**, Yes, On Next reset and Yes, On Every reset.

When SEL Full

This option automatically clears the System Event Log memory of all messages when it is full. The options are **Do Nothing** and Erase Immediately.

Log EFI Status Codes

This option enables or disables the logging of Extensible Firmware Interface (EFI) status codes. The options are Disabled, **Both**, Error code, and Progress code.

▶BMC Network Configuration

Set this feature to configure the IPMI LAN adapter with a network address.

Update IPMI LAN Configuration

This feature allows the user to decide if the BIOS should configure the IPMI setting at next system boot. The options are **No** and Yes. If the option is set to Yes, the user is allowed to configure the IPMI settings at next system boot.

Configuration Source

This feature selects whether the IP address, Subnet Mask and Gateway Address are automatically assigned by the network's DHCP server (Dynamic Host and Configuration Protocol) "Dynamic" or manually entered by the user "Static". When Dynamic is selected, all the options below are automatically assigned to the system by itself or by an external DHCP server. If Static is selected, the IP Address, Subnet Mask and Gateway Address must be manually entered below. The options are Static, Dynamic, and **Do Nothing**.

Current IP Address - Enter the IP address for this machine. This should be in decimal and in dotted quad form (i.e., 192.168.10.253). The value of each three-digit number separated by dots should not exceed 255.

Current Subnet Mask - Subnet masks tell the network which subnet this machine belongs to. The value of each three-digit number separated by dots should not exceed 255.

Current MAC Address - MAC addresses are 6 two-digit hexadecimal numbers (Base 16, 0 ~ 9, A, B, C, D, E, F) separated by dots (i.e., 00.30.48.D0.D4.60).

Current Gateway IP Address - Enter the Gateway or Router address (i.e., 192.168.10.1).

4-6 Boot Settings

Use this feature to configure Boot Settings.

```
Aptio Setup Utility - Copyright (C) 2011 American Megatrends, Inc.
Main  Advanced  Event Logs  IPMI  Boot  Security  Save & Exit

Setup Prompt Timeout                    1
Retry Boot Devices                      [Disabled]
Boot option filter                      [UEFI and Legacy]
Fast Boot                               [Disabled]

Boot Option Priorities
Boot Option #1                          [IBA GE Slot 0200 v1365]
Boot Option #2                          [UEFI: Built-in EFI Shell ]

Network Device BBS Priorities

Number of seconds to
wait for setup
activation key.
65535(0xFFFF) means
indefinite waiting.

→←: Select Screen
↑↓: Select Item
Enter: Select
+/-: Change Opt.
F1: General Help
F2: Previous Values
F3: Optimized Defaults
F4: Save & Exit
ESC: Exit

Version 2.14.1219. Copyright (C) 2011 American Megatrends, Inc.
```

Setup Prompt Timeout

Use this feature to enter the number of seconds to wait for setup activation key. The default setting is **1** second.

Retry Boot Devices

When set to Enabled, the BIOS will continuously retry to boot from a legacy device. The options are **Disabled** and Enabled.

Boot Option Filter

Use this feature to determine which items the system can boot to. The options are **UEFI and Legacy**, UEFI only, and Legacy only.

Fast Boot

This feature enables boot with initialization of a minimal set of devices required to launch active boot option. The options are **Disabled** and Enabled.

Boot Options Priorities

This feature allows the user to specify which devices are boot devices and the order of priority from which the systems boots during startup.

Boot Option #1, Boot option #2, etc.

The settings are [**any detected boot device**] and Disabled.

Network Device BBS Priorities

This option sets the order of the legacy network devices detected by the motherboard.

4-8 Security Settings

```
Aptio Setup Utility - Copyright (C) 2011 American Megatrends, Inc.
Main  Advanced  Event Logs  IPMI  Boot  Security  Save & Exit

Password Description                                  Setup: Check
                                                      password while
If ONLY the Administrator's password is set,          invoking setup.
then this only limits access to Setup and is          Always: Check
only asked for when entering Setup.                   password while
If ONLY the User's password is set, then this         invoking setup as
is a power on password and must be entered to         well as on each boot.
boot or enter Setup. In Setup the User will
have Administrator rights.
The password length must be
in the following range:
Minimum length                    3
Maximum length                    20
                                                      →←: Select Screen
                                                      ↑↓: Select Item
Password Check                    [Setup]             Enter: Select
Administrator Password                                +/-: Change Opt.
                                                      F1: General Help
                                                      F2: Previous Values
UEFI Secure Boot Management                           F3: Optimized Defaults
Secure Boot control               [Enabled]           F4: Save & Exit
▶ Secure Boot Policy                                  ESC: Exit
▶ Key Management

Version 2.14.1219. Copyright (C) 2011 American Megatrends, Inc.
```

- If the Administrator password is defined ONLY - this controls access to the BIOS setup ONLY.
- If the User's password is defined ONLY - this password will need to be entered during each system startup or boot, and will also have Administrator rights in the setup.
- Passwords must be at least 3 and up to 20 characters long.

Password Check

Use this feature to determine when a password entry is required. Select Setup to require the password only when entering setup. Select Always to require the password when entering setup and on each boot. The options are **Setup** and Always.

Administrator Password

Press Enter to create a new, or change an existing Administrator password.

Secure Boot Control

Use this item to secure boot flow control. Secure boot is possible only if the system runs in User Mode. The options are **Enabled** and Disabled.

▶Secure Boot Policy

Use this feature to configure the extended options for Secure Boot mode.

Internal FV

Use this item to determine whether or not to load an image from the above device path in the event of a security violation. The current available option is **Always Execute**.

Option ROM, Removable Media, Fixed Media

Use this item to determine whether or not to load an image from the above device paths in the event of a security violation. The options are Always Execute, Always Deny, Allow Execute, Defer Execute, **Deny Execute**, and Query User.

▶Key Management

Use this feature to configure key management options for the following items:

Platform Key (PK)

Set PK from File: This item launches the Filebrowser to set the Platform Key from file.

Get PK to File: This item stores the existing Platform key to file name PK in selected filesystem's root.

Delete the PK: Deletes the Platform Key

Key Exchange Key Database (KEK)

Set KEK from File: This item launches the Filebrowser to set the Key Exchange Key Signature Database from file.

Get KEK to File: This item stores the existing Key Exchange Key Signature Database to file name KEK in selected filesystem's root.

Delete the KEK: Deletes the Key Exchange Key Signature Database.

Append an entry to KEK: This item launches the Filebrowser to append the Key Exchange Key Signature Database entry from file.

Authorized Signature Database (DB)

Set DB from File: This item launches the Filebrowser to set the Authorized Signature Database from file.

Get DB to File: This item stores the existing Authorized Signature Database to file name DB in selected filesystem's root.

Delete the DB: Deletes the Authorized Signature Database.

Append an entry to DB: This item launches the Filebrowser to append the Authorized Signature Database entry from file.

Forbidden Signature Database (DBX)

Set DBX from File: This item launches the Filebrowser to set the Forbidden Signature Database from file.

Get DBX to File: This item stores the existing Forbidden Signature Database to file name DB in selected filesystem's root.

Delete the DBX: Deletes the Forbidden Signature Database.

Append an entry to DBX: This item launches the Filebrowser to append the Forbidden Signature Database entry from file.

Manage All Factory Keys (PK, KEK, DB, DBX)

Install Factory Defaults

This item restores all Secure Boot Mode options to the factory defaults.

4-9 Save & Exit

Select the Exit tab from the BIOS Setup Utility screen to enter the Exit BIOS Setup screen.

```
Aptio Setup Utility – Copyright (C) 2011 American Megatrends, Inc.
Main  Advanced  Event Logs  IPMI  Boot  Security  Save & Exit

Discard Changes and Exit                    Exit system setup
Save Changes and Reset                      without saving any
Discard Changes                             changes.

Restore Defaults
Save as User Defaults
Restore User Defaults

Boot Override                               →←: Select Screen
IBA GE Slot 0200 v1365                      ↑↓: Select Item
UEFI: Built-in EFI Shell                    Enter: Select
                                            +/-: Change Opt.
                                            F1: General Help
                                            F2: Previous Values
                                            F3: Optimized Defaults
                                            F4: Save & Exit
                                            ESC: Exit

Version 2.14.1219. Copyright (C) 2011 American Megatrends, Inc.
```

Discard Changes and Exit

Select this option to quit the BIOS Setup without making any permanent changes to the system configuration, and reboot the computer. Select Discard Changes and Exit from the Exit menu and press <Enter>.

Save Changes and Reset

When you have completed the system configuration changes, select this option to leave the BIOS Setup Utility and reboot the computer, so the new system configuration parameters can take effect. Select Save Changes and Exit from the Exit menu and press <Enter>.

Discard Changes

Select this option and press <Enter> to discard all the changes and return to the AMI BIOS Utility Program.

Restore Defaults

To set this feature, select Restore Defaults from the Exit menu and press <Enter>. These are factory settings designed for maximum system stability, but not for maximum performance.

Save As User Defaults

To set this feature, select Save as User Defaults from the Exit menu and press <Enter>. This enables the user to save any changes to the BIOS setup for future use.

Restore User Defaults

To set this feature, select Restore User Defaults from the Exit menu and press <Enter>. Use this feature to retrieve user-defined settings that were saved previously.

Boot Override

Listed on this section are other boot options for the system (i.e., Built-in EFI shell). Select an option and press <Enter>. Your system will boot to the selected boot option. This is a one-time override.

Notes

Appendix A

BIOS Error Beep Codes

During the POST (Power-On Self-Test) routines, which are performed each time the system is powered on, errors may occur.

Non-fatal errors are those which, in most cases, allow the system to continue with bootup. The error messages normally appear on the screen.

Fatal errors will not allow the system to continue to bootup. If a fatal error occurs, you should consult with your system manufacturer for possible repairs.

These fatal errors are usually communicated through a series of audible beeps. The numbers on the fatal error list correspond to the number of beeps for the corresponding error.

A-1 BIOS Error Beep Codes

BIOS Error Beep Codes		
Beep Code/LED	**Error Message**	**Description**
1 beep	Refresh	Circuits have been reset. (Ready to power up)
5 short beeps + 1 long beep	Memory error	No memory detected in the system
5 beeps	Display memory read/write error	Video adapter missing or with faulty memory
1 continuous beep	System OH	System Overheat

Notes

Appendix B

Software Installation Instructions

B-1 Installing Drivers

After you've installed the Windows Operating System, a screen as shown below will appear. You are ready to install software programs and drivers that have not yet been installed. To install these software programs and drivers, click the icons to the right of these items. (**Note**: To install the Windows Operating System, please refer to the instructions posted on our website at http://www.supermicro.com/support/manuals/.)

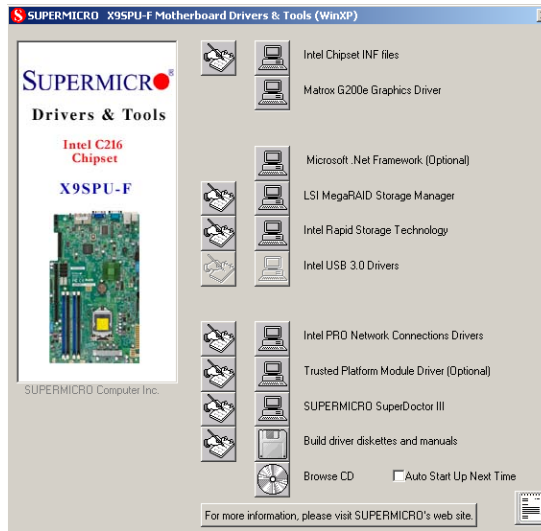

Driver/Tool Installation Display Screen

Note 1. Click the icons showing a hand writing on the paper to view the readme files for each item. Click on a computer icon to the right of an item to install this item (from top to the bottom), one at a time. After installing each item, you must reboot the system before proceeding with the next item on the list. The bottom icon with a CD on it allows you to view the entire contents of the CD.

Note 2. When making a storage driver diskette by booting into a Driver CD, please set the SATA Configuration to "Compatible Mode" and configure SATA as IDE in the BIOS Setup. After making the driver diskette, be sure to change the SATA settings back to your original settings.

B-2 Configuring SuperDoctor® III

The SuperDoctor III program is a Web-based management tool that supports remote management capability. It includes Remote and Local Management tools. The local management tool is called the SD III Client. The SuperDoctor III program included on the CDROM that came with your motherboard allows you to monitor the environment and operations of your system. SuperDoctor III displays crucial system information such as CPU temperature, system voltages and fan status. See the Figure below for a display of the SuperDoctor III interface.

Note: 1 The default user name and password are ADMIN.

Note 2: In the Windows OS environment, the SuperDoctor III settings take precedence over the BIOS settings. When first installed, SuperDoctor III adopts the temperature threshold settings previously set in BIOS. Any subsequent changes to these thresholds must be made within SuperDoctor, since the settings override the BIOS settings. For the Windows OS to adopt the BIOS temperature threshold settings, please change the SD III Client settings to be the same as those set in BIOS.

SuperDoctor III Interface Display Screen-I (Health Information)

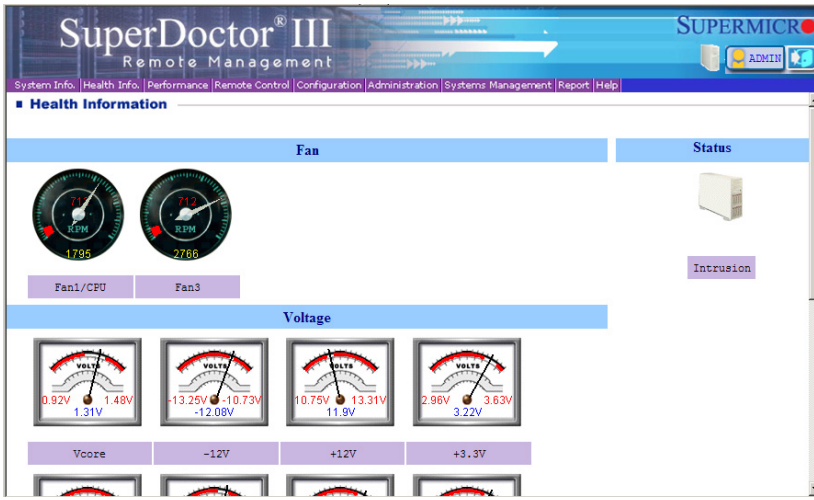

SuperDoctor III Interface Display Screen-II (Remote Control)

Note: The SuperDoctor III software and manual may be downloaded from our Website at:

http://www.supermicro.com/products/accessories/software/SuperDoctorIII.cfm.

For Linux, we still recommend that you use SuperDoctor II, this version is also available for download at the link above.

Notes

Appendix C

UEFI BIOS Recovery Instructions

Warning! Do not upgrade the BIOS unless your system has a BIOS-related issue. Flashing the wrong BIOS can cause irreparable damage to the system. In no event shall Supermicro be liable for direct, indirect, special, incidental, or consequential damages arising from a BIOS update. If you need to update the BIOS, do not shut down or reset the system while the BIOS is updating to avoid possible boot failure.

An Overview to the UEFI BIOS

The Unified Extensible Firmware Interface (UEFI) specification provides a software-based interface between the operating system and the platform firmware in the pre-boot environment. The UEFI specification supports an architecture-independent mechanism for add-on card initialization to allow the UEFI OS loader, which is stored in the add-on card, to boot up the system. UEFI offers a clean, hand-off control to a computer system at bootup.

How to Recover the UEFI BIOS Image (-the Main BIOS Block)

An AMIBIOS flash chip consists of a boot sector block and a main BIOS code block (a main BIOS image). The boot sector block contains critical BIOS codes, including memory detection and recovery codes for the user to flash a new BIOS image if the original BIOS image is corrupted. When the system power is on, the boot sector codes execute first. Once it is completed, the main BIOS code will continue with system initialization and bootup.

Note: Follow the BIOS Recovery instructions below for BIOS recovery when the main BIOS block crashes. However, when the BIOS Boot sector crashes, you will need to send the motherboard back to Supermicro for RMA repair.

To Recover the Main BIOS Block Using a USB-Attached Device

This feature allows the user to recover a BIOS image using a USB-attached device without additional utilities used. A USB flash device such as a USB Flash Drive, or

a USB CD/DVD ROM/RW device can be used for this purpose. However, a USB Hard Disk drive cannot be used for BIOS recovery at this time.

To perform UEFI BIOS recovery using a USB-attached device, follow the instructions below.

1. Using a different machine, copy the "Super.ROM" binary image file into the disc Root "\" Directory of a USB device or a writeable CD/DVD.

   Note: If you cannot locate the "Super.ROM" file in your driver disk, visit our website at www.supermicro.com to download the BIOS image into a USB flash device and rename it to "Super.ROM" for BIOS recovery use.

2. Insert the USB device that contains the new BIOS image ("Super.Rom") into your USB drive and power on the system

3. While powering on the system, keep pressing <Ctrl> and <Home> simultaneously on your PS2 or USB keyboard until your hear two short beeps. This may take from a few seconds to one minute.

4. After locating the new BIOS binary image, the system will enter the BIOS Recovery page as shown below.

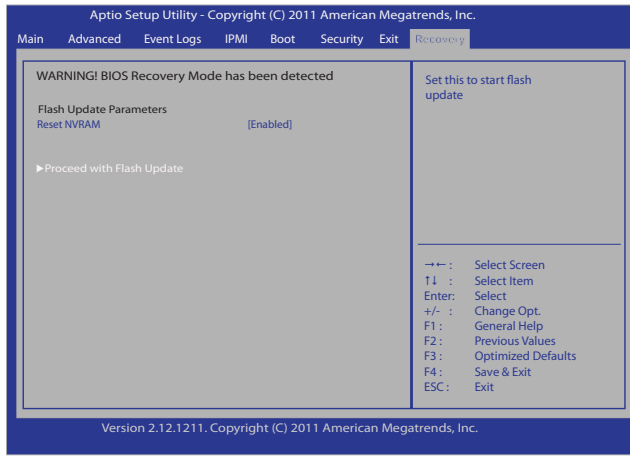

Note: At this point, you may decide if you want to start with BIOS Recovery. If you decide to proceed with BIOS Recovery, follow the procedures below.

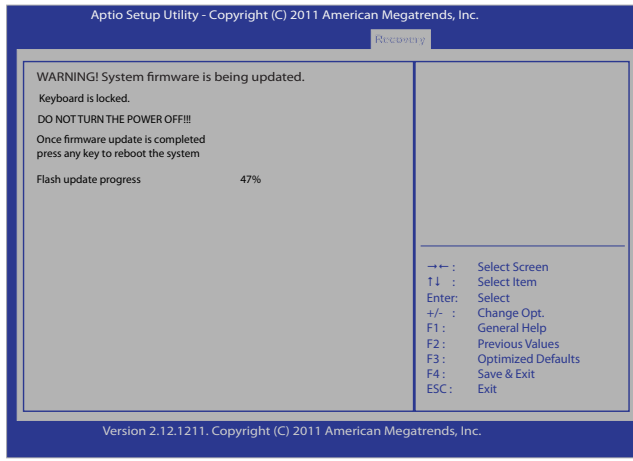

5. When the screen as shown above displays, using the arrow key, select the item- "Proceed with flash update" and press the <Enter> key. You will see the progress of BIOS Recovery as shown in the screen below.

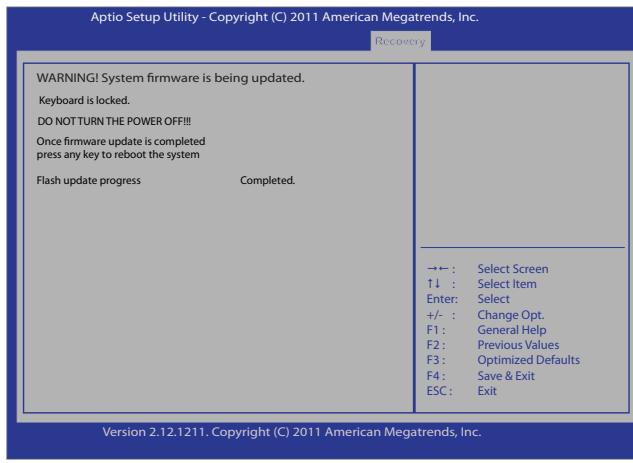

Note: *Do not interrupt* the process of BIOS flashing until it is completed.

6. After the process of BIOS Recovery is complete, press any key to reboot the system.

7. Using a different system, extract the BIOS package into a bootable USB flash drive.

8. When a DOS prompt appears, type AMI.BAT BIOSname.### at the prompt.

   Note: *Do not interrupt* this process until BIOS flashing is completed.

9. After seeing the message that BIOS update is completed, unplug the AC power cable to clear CMOS, and then plug in the AC power cable to power on the system.

10. Press <Del> continuously to enter the BIOS Setup utility.

11. Press <F3> to load default settings.

12. After loading default settings, press <F4> to save the settings and exit the BIOS Setup utility.

(Disclaimer Continued)

The products sold by Supermicro are not intended for and will not be used in life support systems, medical equipment, nuclear facilities or systems, aircraft, aircraft devices, aircraft/emergency communication devices or other critical systems whose failure to perform be reasonably expected to result in significant injury or loss of life or catastrophic property damage. Accordingly, Supermicro disclaims any and all liability, and should buyer use or sell such products for use in such ultra-hazardous applications, it does so entirely at its own risk. Furthermore, buyer agrees to fully indemnify, defend and hold Supermicro harmless for and against any and all claims, demands, actions, litigation, and proceedings of any kind arising out of or related to such ultra-hazardous use or sale.