molex
one company › a world of innovation

This document was generated on 05/31/2010

PLEASE CHECK WWW.MOLEX.COM FOR LATEST PART INFORMATION

Part Number: 0716612430

Status: Active

Overview: ebbi_50d

Description: 1.27mm (.050") Pitch EBBI™ 50D Plug, Right Angle, 130 Circuits, 3.18mm (.125") PC Tail Length

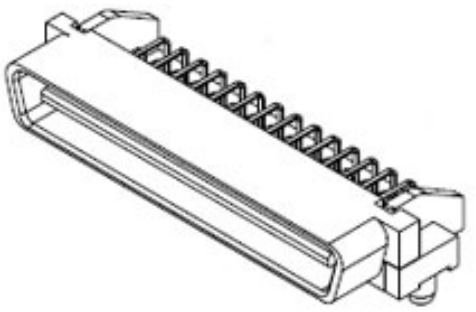

Series

image - Reference only

Documents:

3D Model
Drawing (PDF)
RoHS Certificate of Compliance (PDF)

Agency Certification

CSA	LR19980
UL	E29179

General

Product Family	PCB Headers
Series	71661
Application	Board-to-Board, Wire-to-Board
Overview	ebbi_50d
Product Name	EBBI™

Physical

Breakaway	No
Circuits (Loaded)	130
Circuits (maximum)	130
Color - Resin	Black
Durability (mating cycles max)	2,000
First Mate / Last Break	No
Flammability	94V-0
Glow-Wire Compliant	No
Guide to Mating Part	No
Keying to Mating Part	None
Lock to Mating Part	Yes
Material - Metal	Brass
Material - Plating Mating	Gold
Material - Plating Termination	Tin
Material - Resin	High Temperature Thermoplastic
Number of Rows	4
Orientation	Right Angle
PC Tail Length (in)	0.125 In
PC Tail Length (mm)	3.18 mm
PCB Locator	Yes
PCB Retention	Yes
PCB Thickness Recommended (in)	0.062 In
PCB Thickness Recommended (mm)	1.60 mm
Packaging Type	Tray
Pitch - Mating Interface (in)	0.050 In
Pitch - Mating Interface (mm)	1.27 mm
Pitch - Term. Interface (in)	0.050 In
Pitch - Term. Interface (mm)	1.27 mm
Plating min: Mating (µin)	30
Plating min: Mating (µm)	0.76
Plating min: Termination (µin)	50
Plating min: Termination (µm)	1.30
Polarized to Mating Part	Yes
Polarized to PCB	Yes

EU RoHS
ELV and RoHS Compliant

China RoHS

REACH SVHC
Contains SVHC: No

Halogen-Free Status
Not Reviewed

Need more information on product environmental compliance?

Email productcompliance@molex.com
For a multiple part number RoHS Certificate of Compliance, click here

Please visit the Contact Us section for any non-product compliance questions.

Search Parts in this Series
71661Series

Mates With
EBBI™ 50D Receptacle 71660 , 87552

Shrouded	Fully
Stackable	No
Surface Mount Compatible (SMC)	No
Temperature Range - Operating	-40°C to +105°C
Termination Interface: Style	Through Hole

Electrical

Current - Maximum per Contact	1A
Voltage - Maximum	30V

Material Info

Reference - Drawing Numbers

Packaging Specification	PK-70873-084*
Sales Drawing	SDA-71661-2***

This document was generated on 05/31/2010

PLEASE CHECK WWW.MOLEX.COM FOR LATEST PART INFORMATION

NOTES:

1. MATERIAL:
   HOUSING: LIQUID CRYSTAL POLYMER (LCP), GLAS-FILLED, UL 94V-0,
   COLOR: BLASK
   TERMINALS: BRASS
2. FINISH:
   TERMINAL: 0.76 MICROMETERS/30 MICROINCHES MINIMUM SELECTIVE GOLD IN CONTACT AREA, 1.27 MICROMETERS/50 MICROINCHES MINIMUM SELECTIVE TIN IN THE PC TAIL AREA; NICKEL UNDERPLATE OVERALL
3. ASSEMBLY MATES WITH MOLEX P/N SDA-71660-****
4. CONFORMS TO PRODUCT SPEC: PS-71660
5. RECOMMENDED PC BOARD THICKNESS IS .062/1.60
6. FOUR DIGIT DATE CODE (WK,YR) EXAMPLE 26 96 LOCATED IN AREA SHOWN
7. TOOLING STATUS: "X" INDICATES NO TOOLING AVAILABLE
   CONTACT FACTORY FOR FURTHER INFORMATION

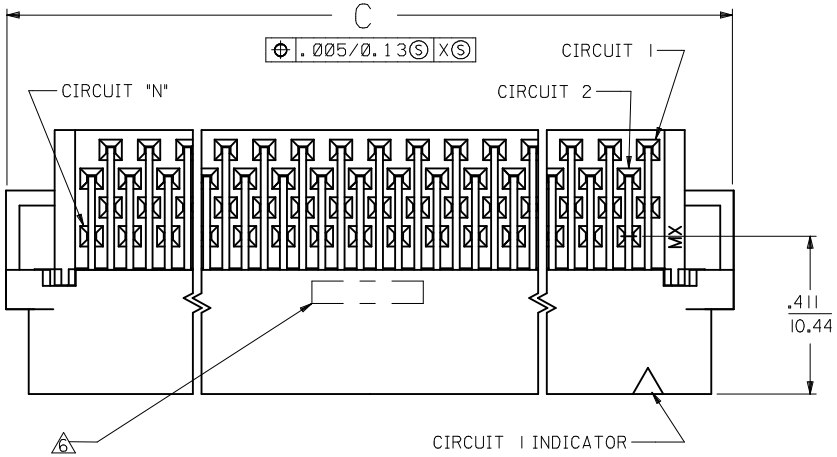

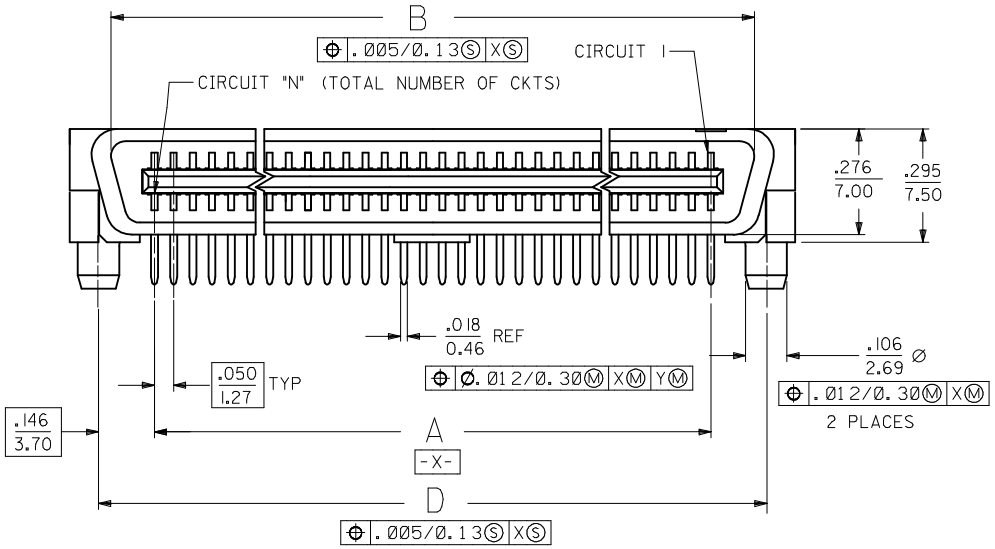

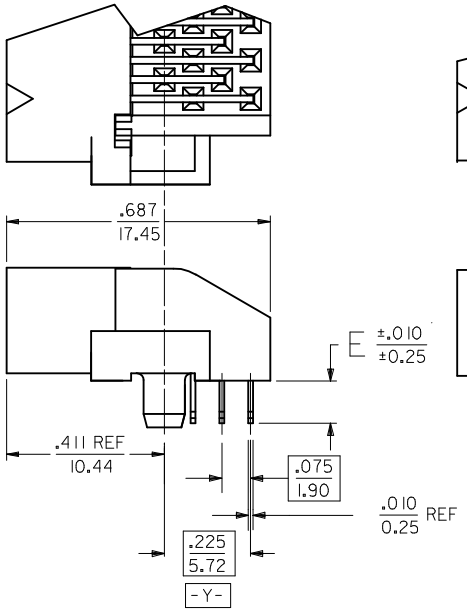

END DETAIL
OPTION A
(BOTH ENDS)

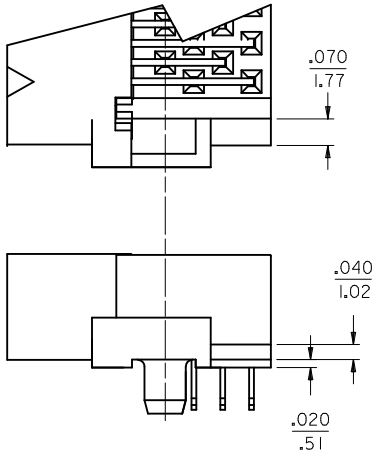

END DETAIL
OPTION B
(BOTH ENDS)

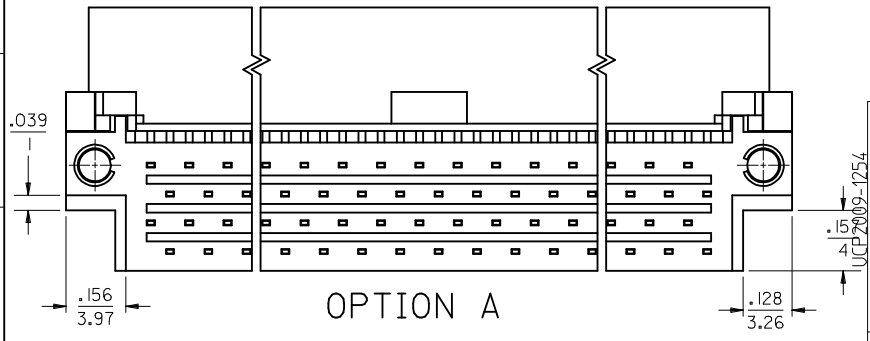

OPTION A

CHANGE MATERIAL		
EC NO:		
DRWN:MSIBARRA	2008/12/19	
CH'KD:BBARKER	2009/01/06	
APPR:SMILLER	2009/01/06	
N		DESCRIPTION

REV

QUALITY SYMBOLS
▼=0
▽C=0

GENERAL TOLERANCES (UNLESS SPECIFIED)

	mm	INCH
4 PLACES	± ---	± ---
3 PLACES	± ---	± .010
2 PLACES	± 0.25	± ---
1 PLACE	± ---	± ---
ANGULAR ±1/2°		

DRAFT WHERE APPLICABLE MUST REMAIN WITHIN DIMENSIONS

DIMENSION STYLE: IN/MM
SCALE: 4:1
DESIGN UNITS: INCH
THIRD ANGLE PROJECTION

DRAWN BY	RAN	DATE 1993/02/23
CHECKED BY	RAN	DATE 1993/02/23
APPROVED BY	CAB	DATE 1993/02/23

TITLE: SALES ASSEMBLY EBBI 50D RIGHT ANGLE PLUG CONNECTOR

molex MOLEX INCORPORATED

MATERIAL NO.: SEE TABLE
DOCUMENT NO.: SDA-71661-2***
SHEET NO.: 1 OF 2
SIZE: C

THIS DRAWING CONTAINS INFORMATION THAT IS PROPRIETARY TO MOLEX INCORPORATED AND SHOULD NOT BE USED WITHOUT WRITTEN PERMISSION

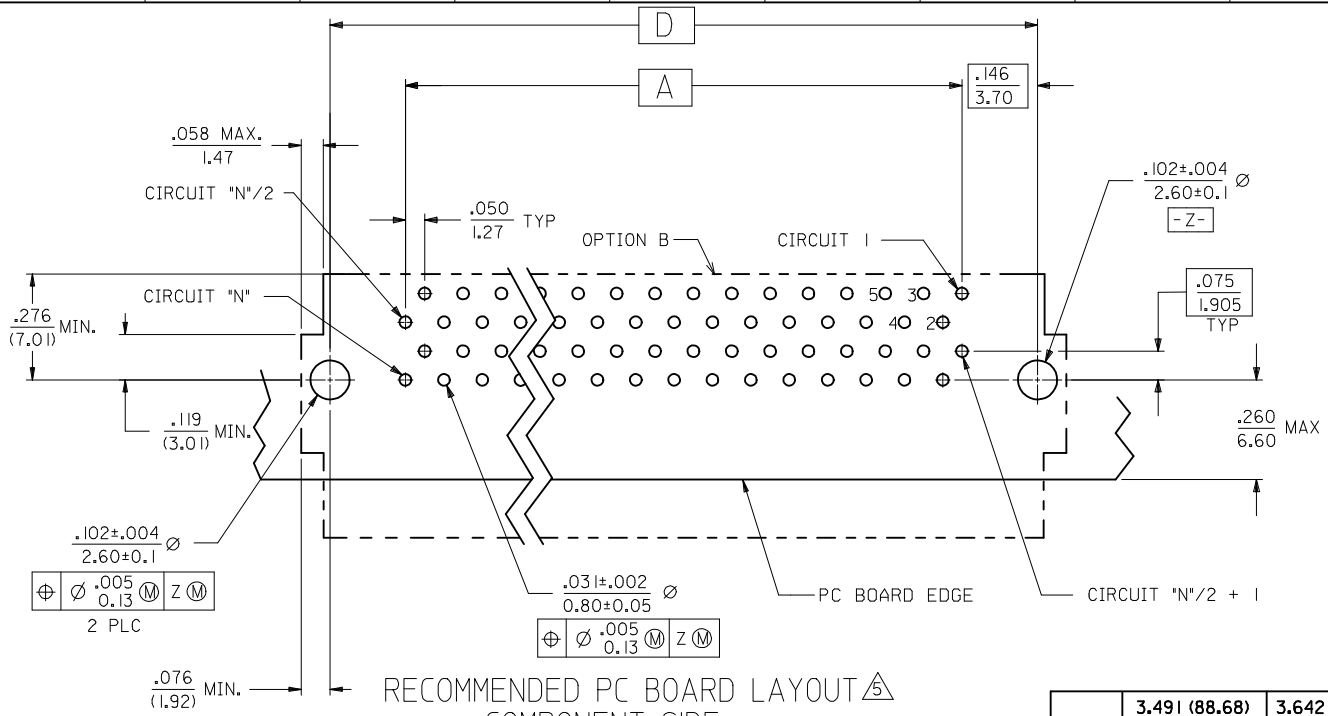

RECOMMENDED PC BOARD LAYOUT 5
COMPONENT SIDE

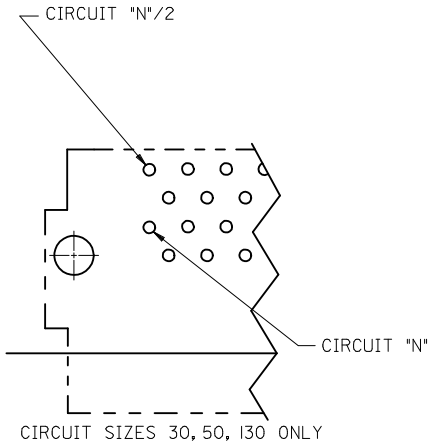

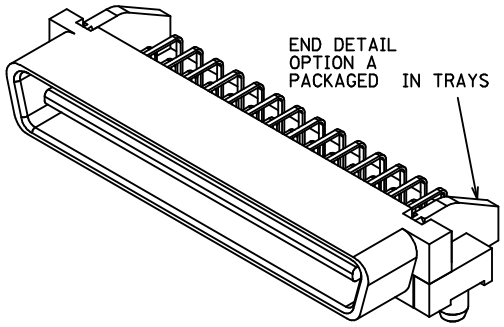

50 CIRCUIT ASSEMBLY SHOWN

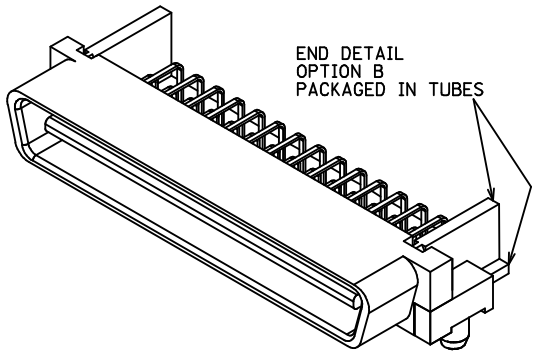

TRAY PACK
PER SPEC.
PK-70873-084*

END DETAIL
OPTION "A"

.125 (3.18)	3.491 (88.68)	3.642 (92.50)	3.426 (87.02)	3.200 (81.28)	130		71661-2430
	3.241 (82.33)	3.392 (86.15)	3.176 (80.67)	2.950 (74.93)	120		71661-2420
	2.741 (69.63)	2.892 (73.45)	2.676 (67.97)	2.450 (62.23)	100		71661-2400
	2.241 (56.93)	2.392 (60.75)	2.176 (55.27)	1.950 (49.53)	80		71661-2380
	1.941 (49.31)	2.092 (53.13)	1.875 (47.65)	1.650 (41.91)	68		71661-2368
	1.741 (44.23)	1.892 (48.05)	1.676 (42.57)	1.450 (36.83)	60		71661-2360
	1.491 (37.88)	1.642 (41.70)	1.426 (36.22)	1.200 (30.48)	50		71661-2350
	1.241 (31.53)	1.392 (35.35)	1.176 (29.87)	.950 (24.13)	40		71661-2340
	.991 (25.18)	1.142 (29.00)	.925 (23.52)	.700 (17.78)	30		71661-2330
.110 (2.79)	3.491 (88.68)	3.642 (92.50)	3.426 (87.02)	3.200 (81.28)	130		71661-2130
	3.241 (82.33)	3.392 (86.15)	3.176 (80.67)	2.950 (74.93)	120		71661-2120
	2.741 (69.63)	2.892 (73.45)	2.676 (67.97)	2.450 (62.23)	100		71661-2100
	2.241 (56.93)	2.392 (60.75)	2.176 (55.27)	1.950 (49.53)	80		71661-2080
	1.941 (49.31)	2.092 (53.13)	1.875 (47.65)	1.650 (41.91)	68		71661-2068
	1.741 (44.23)	1.892 (48.05)	1.676 (42.57)	1.450 (36.83)	60		71661-2060
	1.491 (37.88)	1.642 (41.70)	1.426 (36.22)	1.200 (30.48)	50		71661-2050
	1.241 (31.53)	1.392 (35.35)	1.176 (29.87)	.950 (24.13)	40		71661-2040
	.991 (25.18)	1.142 (29.00)	.925 (23.52)	.700 (17.78)	30		71661-2030
E	D	C	B	A	CKT ("N")	4	ITEM NUMBER

CHANGE MATERIAL
EC NO: UCP2009-1254
DRWN:MSIBARRA 2008/12/19
CH'KD:BBARKER 2009/01/06
APPR:SMILLER 2009/01/06
DESCRIPTION
N
REV

QUALITY SYMBOLS
▼=0
▽C=0

GENERAL TOLERANCES (UNLESS SPECIFIED)

	mm	INCH
4 PLACES	± ---	± ---
3 PLACES	± ---	± .010
2 PLACES	± 0.25	± ---
1 PLACE	± ---	± ---
ANGULAR ±1/2°		

DRAFT WHERE APPLICABLE MUST REMAIN WITHIN DIMENSIONS

DIMENSION STYLE: IN/MM
SCALE: 4:1
DESIGN UNITS: INCH
THIRD ANGLE PROJECTION

DRAWN BY: RAN DATE: 1993/02/23
CHECKED BY: RAN DATE: 1993/02/23
APPROVED BY: CAB DATE: 1993/02/23

TITLE
SALES ASSEMBLY
EBBI 50D RIGHT ANGLE
PLUG CONNECTOR

molex MOLEX INCORPORATED

MATERIAL NO.: SEE TABLE
DOCUMENT NO.: SDA-71661-2***
SHEET NO.: 2 OF 2
SIZE: C

THIS DRAWING CONTAINS INFORMATION THAT IS PROPRIETARY TO MOLEX INCORPORATED AND SHOULD NOT BE USED WITHOUT WRITTEN PERMISSION