5.1x4.3mm Oval Premium Red LED

OSR5PA5HA1D

■Features

- High Luminous LEDs
- 5.1x4.3mm Standard Directivity
- Superior Weather-resistance
- UV Resistant Epoxy
- Water Clear Type

■Applications

- Traffic signal, Portable light source
- Signage and channel letter
- Decorating and entertainment lighting
- Architectural lighting
- Outdoor/Indoor applications/Other Lighting

■Outline Dimension

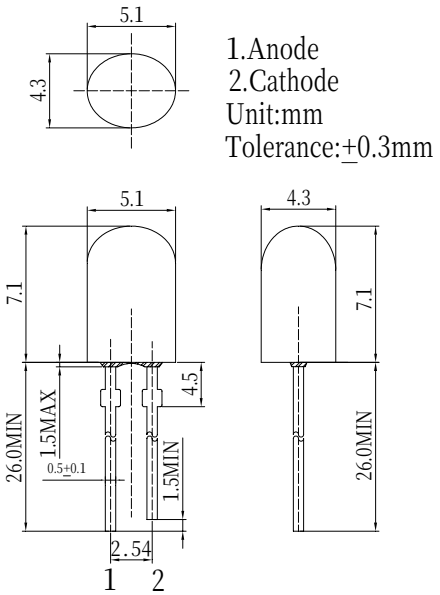

■Absolute Maximum Rating (Ta=25°C)

Item	Symbol	Value	Unit
DC Forward Current	I_F	50	mA
Pulse Forward Current*	I_{FP}	120	mA
Reverse Voltage	V_R	5	V
Power Dissipation	P_D	130	mW
Operating Temperature	Topr	-40~ +85	°C
Storage Temperature	Tstg	-40 ~ +100	°C
Lead Soldering Temperature	Tsol	260°C/5sec	-

*Pulse width Max.10ms , Duty ratio max 1/10

■Directivity

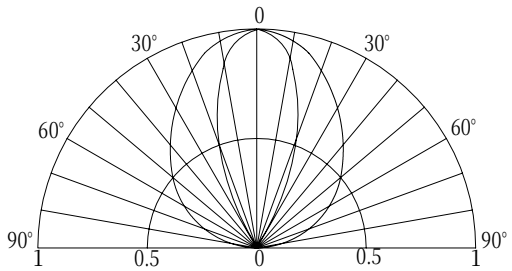

■Electrical -Optical Characteristics (Ta=25°C)

Item	Symbol	Condition	Min.	Typ.	Max.	Unit
DC Forward Voltage	V_F	I_F=20mA	1.8	2.1	2.6	V
DC Reverse Current	I_R	V_R=5V	-	-	10	μA
Domi. Wavelength*	λ_D	I_F=20mA	620	625	630	nm
Luminous Intensity*	Iv	I_F=20mA	7000	8000	-	mcd
50% Power Angle	$2\theta_{1/2}$	I_F=20mA	-	100/40	-	deg

*1 Tolerance of dominant wavelength is ±1nm

*2 Tolerance of luminous intensity is ±15%

■Maximum Forward Current

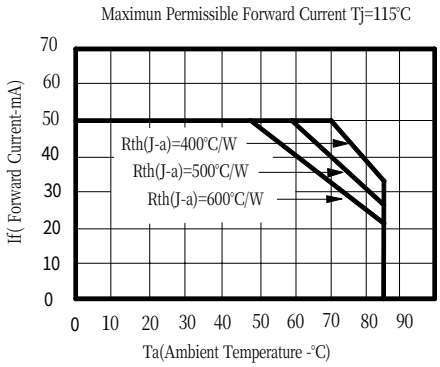

LED & Application Technologies

ATTENTION
OBSERVE PRECAUTIONS
ELECTROSTATIC
SENSITIVE DEVICES