HDC2022 High-Accuracy, Low-Power Humidity and Temperature Sensor With IP67 Rated Water and Dust Protection Cover

1 Features

- Factory-installed IP67 rated water and dust protection cover
- RH measurement range: 0% to 100%
- Temperature measurement range: –40°C to 125°C
- Humidity accuracy: ±2% (typical), ±3% (maximum)
- Temperature accuracy: ±0.2°C (typical), ±0.4°C (maximum)
- Supply voltage range: 1.62 V to 3.6 V
- I^2C interface compatibility
- 50 nA sleep mode current
- 550 nA average supply current (11-bit accuracy option, 1 measurement/second)
- Continuous conversion or one-shot measurement mode
- Backward-compatible with HDC2080

2 Applications

- Thermostats
- Smart speakers (with voice assistant)
- Washers and dryers
- HVAC sensor transmitters (temperature, pressure, and humidity)
- HVAC system controllers
- Wireless environmental sensors

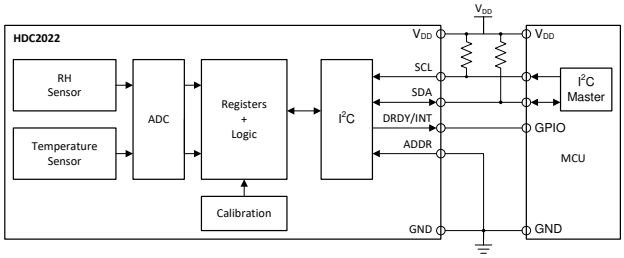

Typical Application

3 Description

The HDC2022 is an integrated relative humidity and temperature sensor with a factory-installed PTFE membrane cover over the opening of the relative humidity sensor. The cover is a hydrophobic micropourous PTFE foil that protects against dust and water according to IP67 specifications. The cover is designed to adhere to the package over lifetime operation while maintaining the same response time as a sensor without the membrane. The cover has a filtration efficiency of 99.99% down to a particle size of 100 nm.

The HDC2022 device is backward-compatible with the HDC2080, providing high accuracy measurements with very low power consumption in a small DFN package. The capacitive-based sensor includes new integrated digital features and a heating element to dissipate condensation and moisture. The HDC2022 digital features include programmable interrupt thresholds to provide alerts and system wake-ups without requiring a microcontroller to continuously monitor the system. Combined with programmable sampling intervals, low power consumption, and 1.8-V supply voltage support, the HDC2022 is designed for ultra-low power battery-operated systems.

Device Information

PART NUMBER	PACKAGE (1)	BODY SIZE (NOM)
HDC2022	WSON (6)	3.00 mm × 3.00 mm

(1) For all available packages, see the orderable addendum at the end of the data sheet.

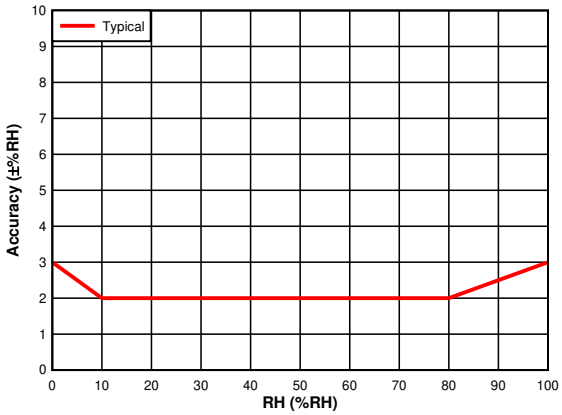

RH Accuracy (T_A = 30°C)

An IMPORTANT NOTICE at the end of this data sheet addresses availability, warranty, changes, use in safety-critical applications, intellectual property matters and other important disclaimers. PRODUCTION DATA.

Table of Contents

1 Features....1
2 Applications....1
3 Description....1
4 Revision History....2
5 Pin Configuration and Functions....3
Pin Functions....3
6 Specifications....4
6.1 Absolute Maximum Ratings....4
6.2 ESD Ratings....4
6.3 Recommended Operating Conditions....4
6.4 Thermal Information....4
6.5 Electrical Characteristics....5
6.6 Switching Characteristics....6
6.7 Timing Diagram....7
6.8 Typical Characteristics....8
7 Detailed Description....10
7.1 Overview....10
7.2 Functional Block Diagram....10
7.3 Feature Description....11
7.4 Device Functional Modes....18
7.5 Programming....18
7.6 Register Maps....20
8 Application and Implementation....33
8.1 Application Information....33
8.2 Typical Application....33
9 Power Supply Recommendations....35
10 Layout....35
10.1 Layout Guidelines....35
10.2 Layout Example....36
11 Device and Documentation Support....37
11.1 Documentation Support....37
11.2 Receiving Notification of Documentation Updates....37
11.3 Support Resources....37
11.4 Trademarks....37
11.5 Electrostatic Discharge Caution....37
11.6 Glossary....37
12 Mechanical, Packaging, and Orderable Information....38

4 Revision History

NOTE: Page numbers for previous revisions may differ from page numbers in the current version.

Changes from December 19, 2019 to June 26, 2020 (from Revision * (December 2019) to Revision A (June 2020)) **Page**

- Changed data sheet status from Advanced Information to Production Data....1
- Updated the numbering format for tables, figures, and cross-references throughout the document....1

Copyright © 2020 Texas Instruments Incorporated

5 Pin Configuration and Functions

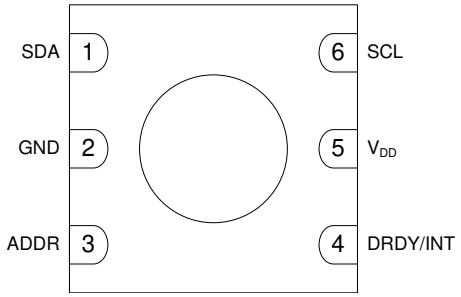

Figure 5-1. DEP Package 6-Pin WSON Transparent Top View

Pin Functions

PIN		TYPE[(1)]	DESCRIPTION
NAME	NO.		
ADDR	3	I	Address select pin – connect to V_{DD}, GND or float. Connect to GND or float: address= 1000000X Connect to V_{DD}: address= 1000001X where 'X' represents the read-write (R/W) bit.
DRDY/INT	4	O	Data ready/Interrupt. Push-Pull Output.
GND	2	G	Ground
SCL	6	I	Serial clock line for I^2C.
SDA	1	I/O	Serial data line for I^2C. Open-drain output that requires a pullup resistor.
V_{DD}	5	P	Positive Supply Voltage

(1) The definitions below define the functionality of the TYPE cells for each pin:
- I = input
- O = output
- I/O = input/output
- G = ground
- P = power

6 Specifications

6.1 Absolute Maximum Ratings

over operating free-air temperature range (unless otherwise noted)[1]

		MIN	MAX	UNIT
V_{DD}	Applied Voltage on V_{DD} pin	–0.3	3.9	V
ADDR	Applied Voltage on ADDR pin	–0.3	3.9	V
SCL	Applied Voltage on SCL pin	–0.3	3.9	V
SDA	Applied Voltage on SDA pin	–0.3	3.9	V
DRDY/INT	Applied Voltage on DRDY/INT pin	–0.3	V_{DD}+ 0.3	V
T_J	Junction temperature	–40	150	°C
T_{stg}	Storage temperature	–65	150	°C

(1) Stresses beyond those listed under *Absolute Maximum Ratings* may cause permanent damage to the device. These are stress ratings only, which do not imply functional operation of the device at these or any other conditions beyond those indicated under *Recommended Operating Conditions*. Exposure to absolute-maximum-rated conditions for extended periods may affect device reliability.

6.2 ESD Ratings

			VALUE	UNIT
$V_{(ESD)}$	Electrostatic discharge	Human body model (HBM), per ANSI/ESDA/JEDEC JS-001[1]	±2000	V
		Charged device model (CDM), per JEDEC specification JESD22-C101[2]	±500	

(1) JEDEC document JEP155 states that 500-V HBM allows safe manufacturing with a standard ESD control process.
(2) JEDEC document JEP157 states that 250-V CDM allows safe manufacturing with a standard ESD control process.

6.3 Recommended Operating Conditions

over operating free-air temperature range (unless otherwise noted)

PARAMETER		MIN	MAX	UNIT
V_{DD}	Supply voltage	1.62	3.6	V
T_{TEMP}	Temperature Sensor - Operating free-air temperature	–40	125	°C
T_{RH}	Relative Humidity Sensor - Operating free-air temperature	–20	70	°C
T_{HEATER}	Integrated Heater - Operating free-air temperature	–40	85	°C
RH_{OR}	Relative Humidity Sensor (Non-condensing)[1]	20	80	%RH

(1) Recommended humidity operating range is 20% to 80% RH (non-condensing) over 0°C to 60°C. Prolonged operation beyond these ranges may result in a shift of sensor reading, with slow recovery time.

6.4 Thermal Information

THERMAL METRIC[1]		HDC2022 WSON (DEP) 6 PINS	UNIT
$R_{\theta JA}$	Junction-to-ambient thermal resistance	57.9	°C/W
$R_{\theta JC(top)}$	Junction-to-case (top) thermal resistance	58.7	°C/W
$R_{\theta JB}$	Junction-to-board thermal resistance	27.0	°C/W
Ψ_{JT}	Junction-to-top characterization parameter	5.6	°C/W
Ψ_{JB}	Junction-to-board characterization parameter	26.9	°C/W
$R_{\theta JC(bot)}$	Junction-to-case (bottom) thermal resistance	16.5	°C/W

(1) For more information about traditional and new thermal metrics, see the IC Package Thermal Metrics application report SPRA953.

Copyright © 2020 Texas Instruments Incorporated

6.5 Electrical Characteristics

T_A = 30°C, V_{DD} = 1.8 V, 20% ≤ RH ≤ 80% (unless otherwise noted)

PARAMETER		TEST CONDITION		MIN	TYP	MAX	UNIT
RELATIVE HUMIDITY SENSOR							
RH_{ACC}	Accuracy[3] [4] [5]				±2	±3	%RH
RH_{REP}	Repeatability[6]	14 bit accuracy option			±0.1		%RH
RH_{HYS}	Hysteresis[8]				±1		%RH
RH_{RT}	Response time[9]	Rising, 30% to 75% RH, $t_{63\%}$ step[10]			6		s
RH_{CT}	Conversion time[6]	9 bit accuracy option			254		µs
		11 bit accuracy option			383		µs
		14 bit accuracy option			640		µs
RH_{LTD}	Long-term drift[11]				±0.25		%RH/yr
RH_{PSRR}	Supply Sensitivity - accuracy	V_{DD} = 1.8V to 3.6V			±0.3		%RH/V
TEMPERATURE SENSOR							
$TEMP_{ACC}$	Accuracy[7]	5°C ≤ T_A ≤ 60°C			±0.2	±0.7	°C
		10°C ≤ T_A ≤ 35°C			±0.2	±0.4	°C
$TEMP_{REP}$	Repeatability[6]	14 bit accuracy option			±0.1		°C
$TEMP_{CT}$	Conversion time[6]	9 bit accuracy option			208		µs
		11 bit accuracy option			336		µs
		14 bit accuracy option			594		µs
$TEMP_{PSRR}$	Supply Sensitivity - accuracy	V_{DD} = 1.8V to 3.6V			0.05		°C/V
$TEMP_{LTD}$	Long term drift[6]	High Temperature Operating Life (HTOL) tested at 125°C for 1000 hours Normalized using Arrhenius-Peck Acceleration Model T_A = 30°C, 0.7eV activation energy				±0.04	°C/yr
POWER CONSUMPTION							
I_{DD}	Supply current	RH & TEMP sensor: 14 bit accuracy option[1] [2]	Averaged at 1 sample per second		0.55		µA
			Averaged at 1 sample every two seconds		0.3		µA
		No Measurement (Sleep Mode)	One-shot		0.05	0.1	µA
			Continuous conversion		0.05	0.1	µA
		During RH + TEMP measurement[1]			650	890	µA
		During TEMP measurement only[1]			550	730	µA
		Startup	Peak		200		µA
			Average		80		µA
		Serial Bus Active. f_{SCL} = 400 kHz	One-shot		12		µA
			Continuous conversion		12		µA
I_{HEATER}	Integrated heater (enabled)	V_{DD} = 3.3V; T_{HEATER} - T_A = 80°C Steady state measurement			90		mA
SUPPLY RAIL							
V_{DD_POR}	Power-on reset voltage	T_A = -40°C to 125°C			1.4		V
SCL, SDA PINS							
V_{IH}	High level input voltage			0.7 x V_{DD}			V
V_{IL}	Low level input voltage					0.3 x V_{DD}	V

PARAMETER		TEST CONDITION		MIN	TYP	MAX	UNIT
V_{OL}	Low level output voltage	I_{OL} = 3 mA				0.4	V
C_I	Input pin capacitance(12)	V_I = V_{DD} or GND	SCL		1.7		pF
			SDA		1.6		pF
I_I	Input leakage current	V_I = V_{DD}, or 3.6V, or GND	SCL	-0.1		0.1	µA
			SDA	-0.1		0.1	µA
DRDY/INT PIN							
V_{OH}	High Level Output Voltage (Figure 6-11)	V_{DD} = 1.62V to 3.60V	I_{OH} = -100 µA.	V_{DD} – 0.2			V
		V_{DD} = 3.3V	I_{OH} = -2 mA.	2.4			V
		V_{DD} = 1.8V		1.1			V
V_{OL}	Low Level Output Voltage (Figure 6-10)	V_{DD} = 1.62V to 3.60V	I_{OL} = 100 µA.			0.2	V
		V_{DD} = 3.3V	I_{OL} = 2 mA.			0.4	V
		V_{DD} = 1.8V				0.45	V
I_{OZ_DRDY}	Output leakage current in Hi-Z	DRDY/INT Pin = Hi-Z.		-0.1		0.1	µA

(1) Does not include I2C read/write communication or pullup resistor current through SCL and SDA
(2) Average current consumption while conversion is in progress
(3) Excludes hysteresis and long-term drift
(4) Excludes the impact of dust, gas phase solvents and other contaminents such as vapors from packaging materials, adhesives, or tapes, etc.
(5) Limits apply over the humidity operating 20% to 80% RH (non-condensing) from 0°C to 60°C
(6) This parameter is specified by design and/or characterization and is not tested in production
(7) Over-temperature performance is specified by design and/or characterization
(8) The hysteresis value is the difference between the RH measurement in a rising and falling RH environment, at a specific RH point
(9) Actual response times will vary dependent on system thermal mass and air-flow
(10) Time for the RH output to change by 63% of the total RH change after a step change in environmental humidity
(11) Drift due to aging effects at typical conditions (30°C and 20% to 50% RH). This value may be impacted by dust, vaporized solvents, outgassing tapes, adhesives, packaging materials, etc.
(12) Guaranteed by design/characterization; not production tested

6.6 Switching Characteristics

T_A = -40°C to 125°C and V_{DD} = 1.62V to 3.60V (unless otherwise noted)

PARAMETER		MIN	TYP	MAX	UNIT
SCL, SDA PINS					
f_{SCL}	SCL clock frequency(1)	10		400	kHz
t_{LOW}	LOW period of the SCL clock(1)	1.3			µs
t_{HIGH}	High period of the SCL clock(1)	0.6			µs
$t_{SU;DAT}$	Setup Time: Data(1)	100			ns
$t_{HD;DAT}$	Hold Time: Data(1)	0			µs
$t_{SU;STA}$	Set-up time: Repeated START condition(1)	0.6			µs
$t_{HD;STA}$	Hold time: Repeated START condition(1) (2)	0.6			µs
$t_{SU;STO}$	Set-up time: STOP condition(1)	0.6			µs
$t_{R;SCL}$	Rise Time: SCL(1)			300	ns
$t_{R;SDA}$	Rise Time: SDA(1)			300	ns
$t_{F;SCL}$	Fall Time: SCL(1)	20*(V_{DD}/5.5V)		300	ns
$t_{F;SDA}$	Fall Time: SDA(1)	20*(V_{DD}/5.5V)		300	ns
t_{BUF}	Bus free time between a STOP and START condition(1)	1.3			µs
$t_{VD;DAT}$	Data valid time(1) (3)			0.9	µs
$t_{VD;ACK}$	Data valid acknowledge time(1) (4)			0.9	µs

Copyright © 2020 Texas Instruments Incorporated

PARAMETER		MIN	TYP	MAX	UNIT
SUPPLY RAIL					
t_{POR}	Power-On Reset or Software Reset Duration(1)			3.5	ms

(1) This parameter is specified by design and/or characterization and is not tested in production
(2) After this period, the first clock pulse is generated
(3) Time for data signal from SCL low to SDA output (high to low, depending on which is worse)
(4) Time for acknowledement signal from SCL low to SDA output (high or low, depending on which is worse)

6.7 Timing Diagram

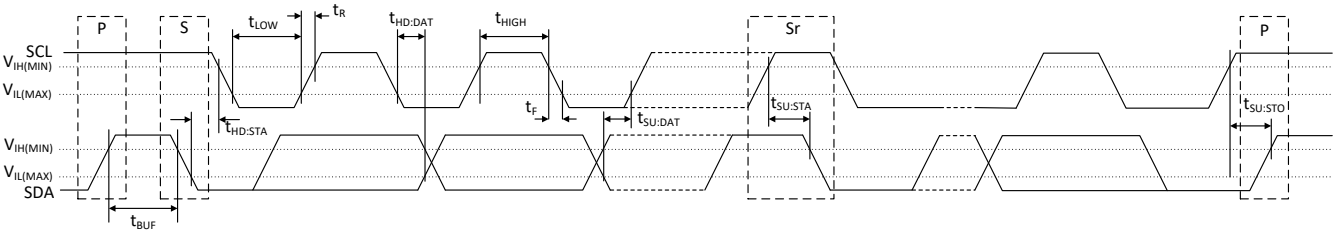

Figure 6-1. I²C Timing Diagram

6.8 Typical Characteristics

Unless otherwise noted, T_A = 30°C, V_{DD} = 1.8 V.

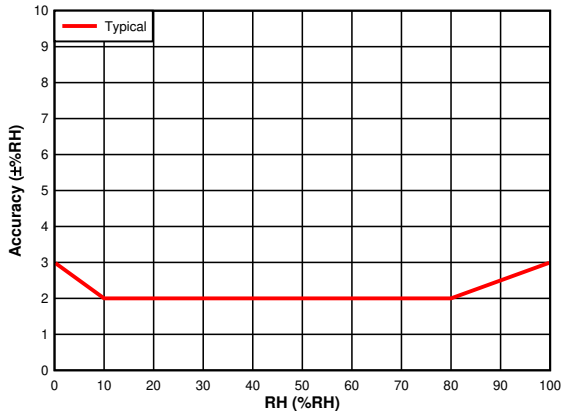

Figure 6-2. RH Accuracy vs. RH Set Point

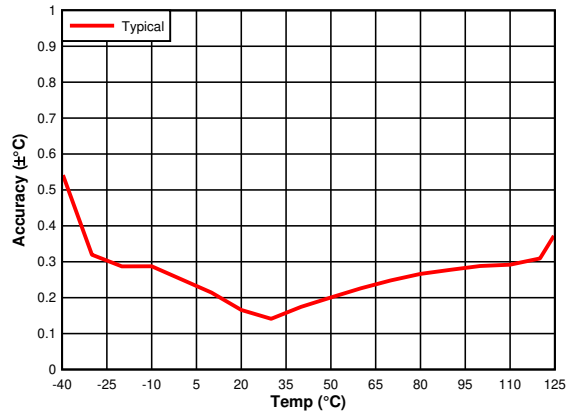

Figure 6-3. Temperature Accuracy vs. Temperature Set Point

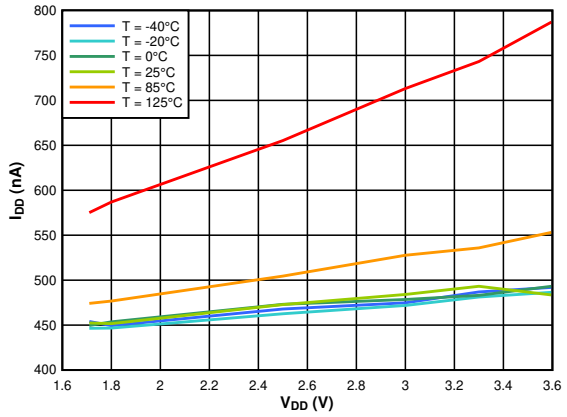

Figure 6-4. Supply Current vs. Supply Voltage, Average at 1 Measurement/Second, RH (11-Bit) and Temperature (11-Bit)

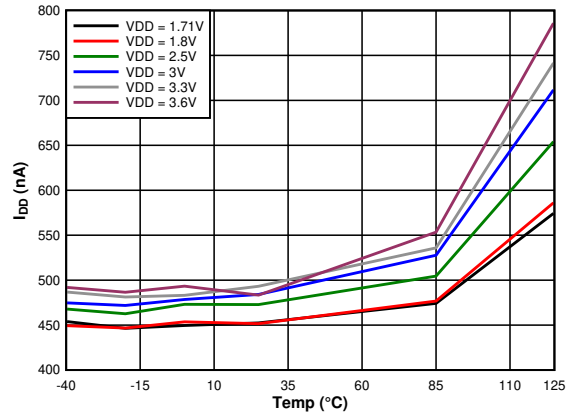

Figure 6-5. Supply Current vs. Temperature, Average at 1 Measurement/Second, RH (11-Bit) and Temperature (11-Bit)

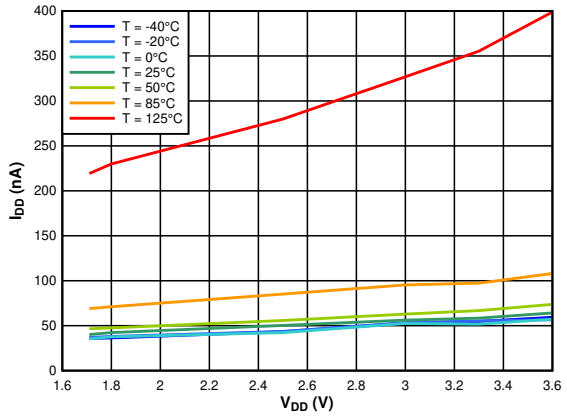

Figure 6-6. Supply Current vs. Supply Voltage, Sleep Mode

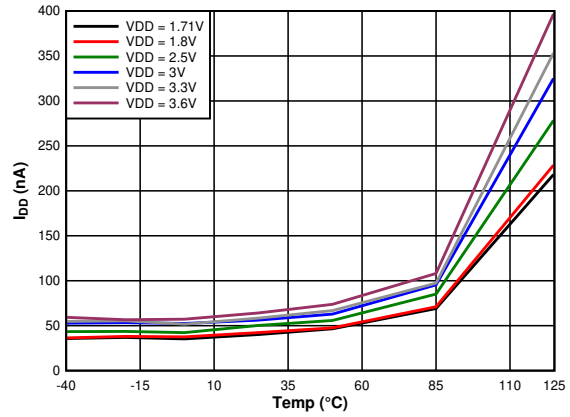

Figure 6-7. Supply Current vs. Temperature, Sleep Mode

Copyright © 2020 Texas Instruments Incorporated

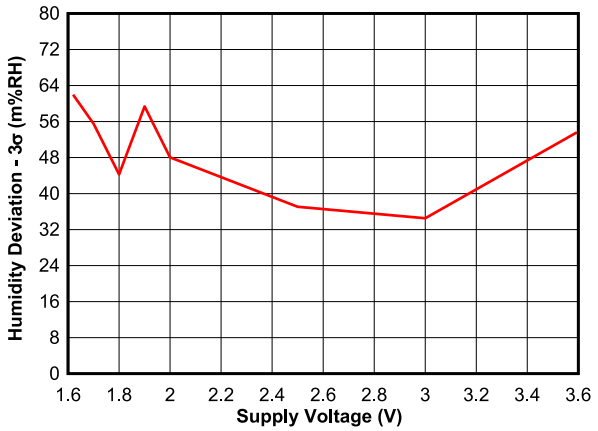

Figure 6-8. Supply Sensitivity- Humidity Measurement Accuracy

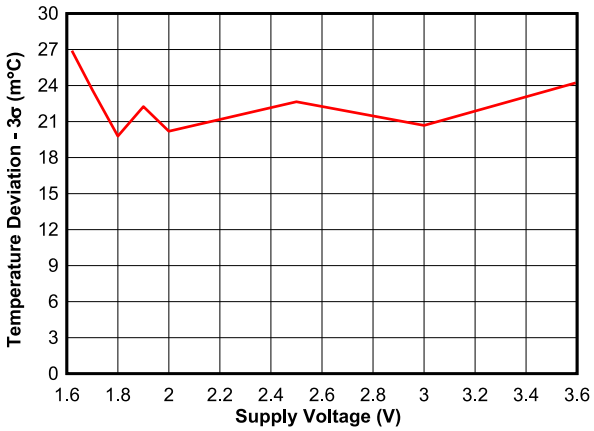

Figure 6-9. Supply Sensitivity- Temperature Measurement Accuracy

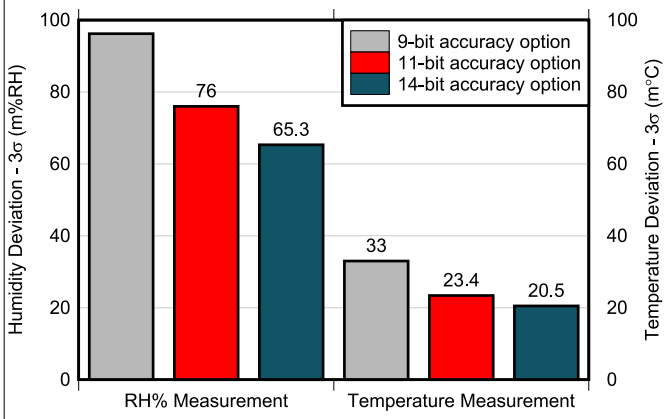

Figure 6-10. Average Measurement Sensitivity vs. Accuracy Option

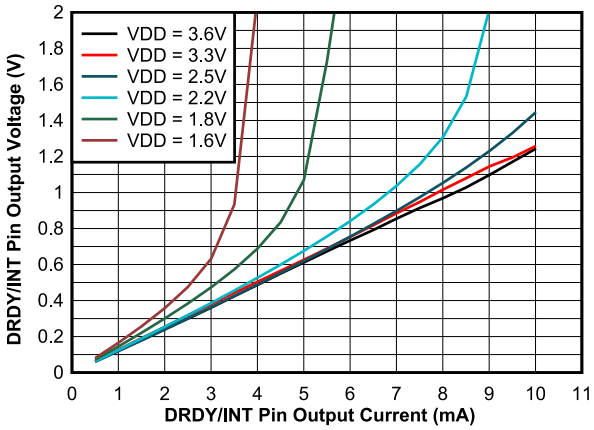

Figure 6-11. Output Voltage (DRDY/INT Pin) vs. Output Current (Logic Low)

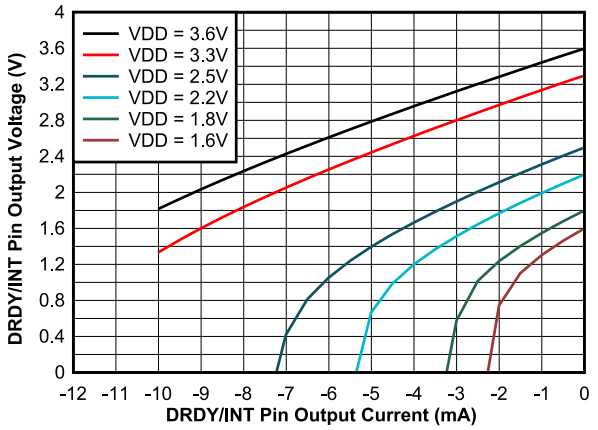

Figure 6-12. Output Voltage (DRDY/INT Pin) vs. Output Current (Logic High)

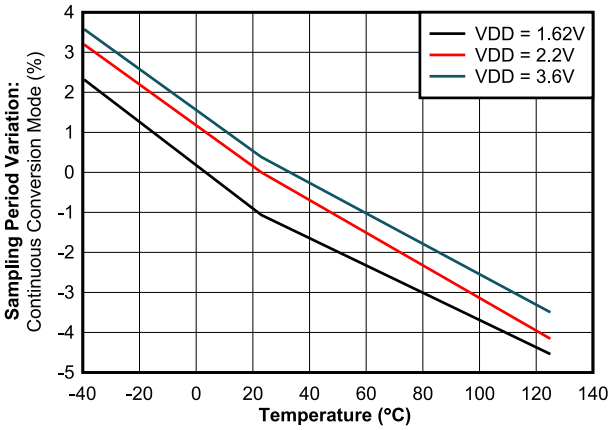

Figure 6-13. Sampling Period Variation (Continuous Conversion Mode) vs. Temperature

7 Detailed Description

7.1 Overview

The HDC2022 is a highly integrated digital humidity and temperature sensor that incorporates both humidity-sensing and temperature-sensing elements, an analog-to-digital converter, calibration memory, and an I^2C interface that are all contained in a 3.00-mm × 3.00-mm, 6-pin WSON package. The HDC2022 provides excellent measurement accuracy with very low power consumption and features configurable accuracy options for both the humidity and temperature sensors:

- Temperature accuracy options: 9, 11, or 14 bits
- Humidity accuracy options: 9, 11, or 14 bits

The conversion time during measurements is dependent upon the configured accuracy option for humidity and temperature. The flexable programmability allows the device to be configured for optimal measurement accuracy and power consumption.

The HDC2022 device incorporates a state-of-the-art polymer dielectric to provide capacitive-sensing measurements. As with most relative humidity sensors that include this type of technology, the user must meet these application requirements to ensure optimal device performance for the sensing element:

- Follow the correct storage and handling procedures during board assembly. See *Humidity Sensor: Storage and Handling Guidelines.* (SNIA025) for these guidelines.
- Protect the sensor from contaminants during board assembly and operation.
- Reduce prolonged exposure to both high temperature and humidity extremes that may impact sensor accuracy.
- Follow the correct layout guidelines for best performance. See *Optimizing Placement and Routing for Humidity Sensors* (SNAA297) for these guidelines.

7.2 Functional Block Diagram

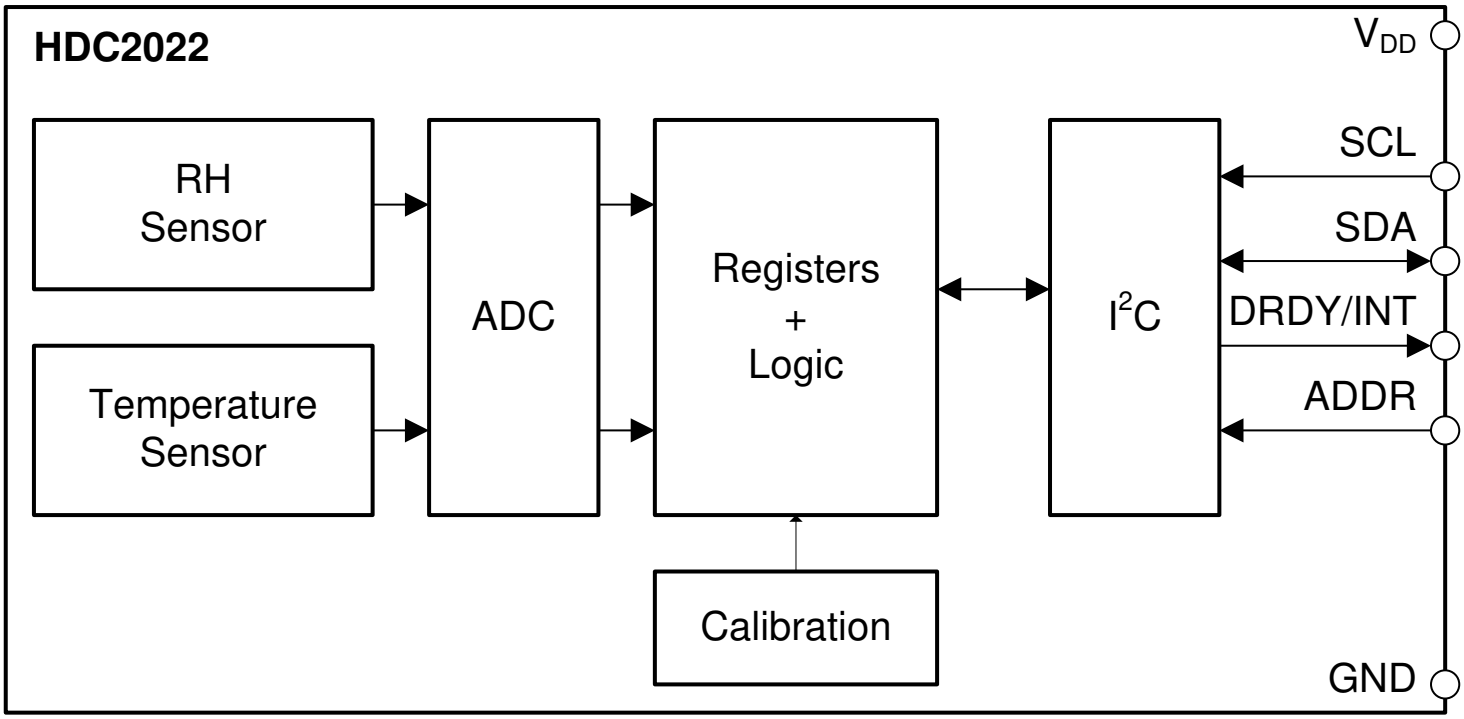

Copyright © 2020 Texas Instruments Incorporated

7.3 Feature Description

7.3.1 Factory Installed IP67 Protection Cover

An IP67 rated PTFE filter covers the opening of the humidity sensor element. The filter provides water and dust protection for the humidity sensor element. It is hydrophobic and provides 99.99% filtration efficiency for particles sizes down to 100 nm.

7.3.2 Sleep Mode Power Consumption

One key feature of the HDC2022 is the low power consumption designed for battery-powered or energy-harvesting applications. In these applications, the HDC2022 can be put into sleep mode with a typical current consumption of 50 nA, minimizing the average power consumption and self-heating. The sleep mode is the default operating mode upon power-on reset.

7.3.3 Measurement Modes: One-Shot vs. Continuous Conversion

There are two types of measurement modes are available on the HDC2022: one-shot mode and continuous conversion mode.

During one-shot mode, each measurement is initiated through an I^2C command on an as-needed basis. After the measurement is completed, the device goes back to the sleep mode automatically until another I^2C command to initiate a measurement is received.

The HDC2022 can also be configured to perform measurements on a periodic basis in continuous conversion mode to eliminate the need to initiate multiple measurement requests through I^2C commands. The user can adjust the Device Configuration register to select one of 7 different sampling rates spanning from 1 sample every 2 minutes to 5 samples every second. In continuous conversion mode, the HDC2022 periodically wakes up from the sleep mode based on the selected sampling rate.

7.3.4 Heater

The HDC2022 includes an integrated heating element that can be switched on briefly to prevent or remove any condensation that may build up in high humidity environments. Additionally, the heater can be used to verify functionally of the integrated temperature sensor.

If the dew point of an application is continuously calculated and tracked, and the application firmware is written such that it can detect a potential condensing situation (or a period of it), a software subroutine can be run, as a precautionary measure, to activate the onboard heater as an attempt to remove the condensate. The device shall continue to measure and track the %RH level after the heater is activated. Once the %RH reading goes to zero % (or near it), the heater can be subsequently turned off, allowing the device to cool down. Cooling of the device can takes minutes and temperature measurement shall continue to be performed to ensure the device goes back to normal operating condition before restarting the device for normal service.

Note once the heater activates, the operating temperature of the device shall be limited to below 100°C. The heater has a typical current draw of 90 mA at 3.3-V operation and 55 mA at 1.8-V operation.

It is important to recognize that the integrated heater evaporates condensate that forms on top of the humidity sensor, but does not remove any dissolved contaminants. Any contaminant residue, if present, may impact the accuracy of the humidity sensor.

Copyright © 2020 Texas Instruments Incorporated

7.3.5 Interrupt

Note

When multiple bits are enabled, the DRDY/INT pin can only reflect the status of one interrupt bit at a time. The DRDY/INT pin DOES NOT function as the logical 'OR' of interrupt bits that have been enabled.

The highest priority is given to TH_ENABLE bit, followed by TL_ENABLE, HH_ENABLE, and HL_ENABLE bits in descending order. Therefore, programming recommendations are provided as below. Note the DataReady (DRDY) interrupt has the same priority as the winner of the other 4 interrupts (TH_ENABLE, TL_ENABLE, HH_ENABLE, and HL_ENABLE).

- The DRDY/INT will track the HL_ENABLE, if enabled, and all other ENABLE bits are disabled.
- The DRDY/INT will track the HH_ENABLE, if enabled, and the TH_ENABLE and TL_ENABLE are disabled.
- The DRDY/INT will track the TL_ENABLE, if enabled, and the TH_ENABLE is disabled.
- The DRDY/INT will track the TH_ENABLE, if enabled, and is independent of other ENABLE bit settings.

Copyright © 2020 Texas Instruments Incorporated

7.3.5.1 DataReady (DRDY) Interrupt

When DRDY_ENABLE is enabled in the Interrupt Configuration register (address 0x07), and a humidity and/or temperature conversion is complete, the DRDY_STATUS bit of the Status register (address 0x04) is asserts to 1. To enable hardware interrupt generation on the DRDY/INT pin of HDC2022, the DRDY/INT_EN bit must be set to 1 and the INT_MODE bit must be set to 0 in the Device Configuration register (address 0x0E). If these bits are not configured, the DRDY/INT pin is kept in high impedance regardless of the interrupt status. The INT_POL bit of this register defines the interrupt polarity of the DRDY/INT pin. Figure 7-1 and Figure 7-2 display the output behavior of the DRDY/INT pin for both interrupt polarity cases: INT_POL= 0 and INT_POL= 1. The interrupt is cleared upon reading the Status register (address 0x04).

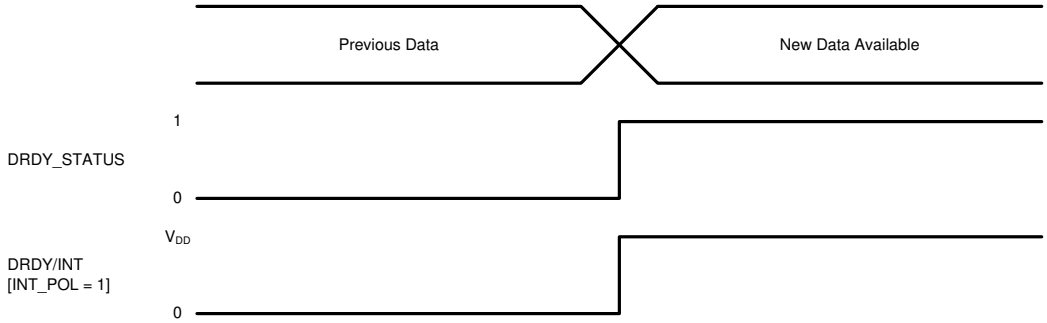

Figure 7-1. Data Ready Interrupt - Active High (INT_POL = 1)

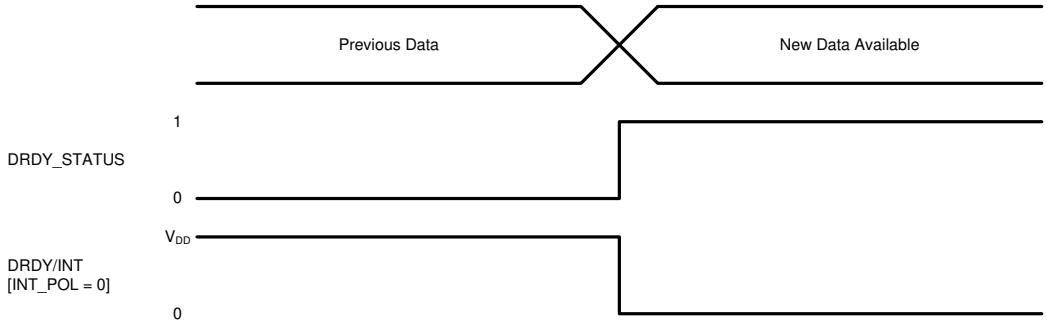

Figure 7-2. Data Ready Interrupt - Active Low (INT_POL = 0)

7.3.5.2 Threshold Interrupt

7.3.5.2.1 Temperature High (TH)

When TH_ENABLE is enabled in the Interrupt Configuration register (address 0x07) and the temperature is over the programmed threshold level stored in the Temperature Threshold HIGH register (address 0x0B), the TH_STATUS bit of the Status register (address 0x04) asserts to 1. The interrupt is cleared upon reading the Status register.

The polarity and interrupt mode of the TH_STATUS bit and the DRDY/INT pin can be configured through the INT_POL and INT_MODE bits of the Device Configuration Register (address 0x0E). The INT_MODE bit sets the threshold to either comparator mode or clear-on-read mode. When the INT_MODE bit is set to 0, the TH_STATUS bit remains set to 1 until it is read. When the INT_MODE bit is set to 1, the TH_STATUS bit status reflects the current temperature conversion result. The polarity of the DRDY/INT pin is set by INT_POL bit.

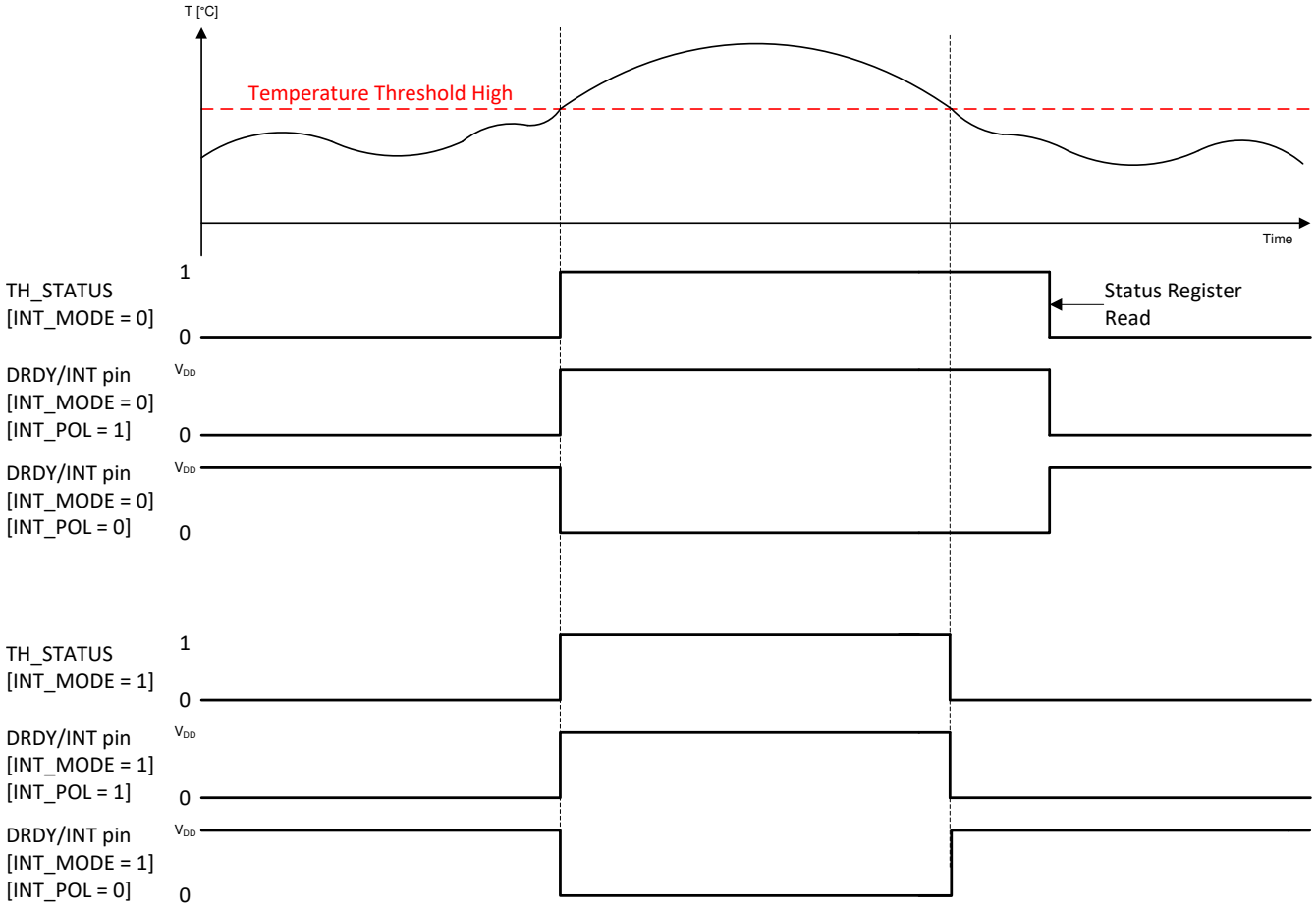

Figure 7-3. INTERRUPT on Threshold - Temperature High

Copyright © 2020 Texas Instruments Incorporated

7.3.5.2.2 Temperature Low (TL)

When TL_ENABLE is enabled in the Interrupt Configuration register (address 0x07) and the temperature is under the programmed threshold level stored in the Temperature Threshold LOW register (address 0x0C), the TL_STATUS bit of the Status register (address 0x04) asserts to 1. The interrupt is cleared upon reading the Status register.

The polarity and interrupt mode of the TL_STATUS bit and the DRDY/INT pin can be configured through the INT_POL and INT_MODE bits of the Device Configuration Register (address 0x0E). The INT_MODE bit sets the threshold to either comparator mode or clear-on-read mode. When the INT_MODE bit is set to 0, the TL_STATUS bit remains set to 1 until it is read. When the INT_MODE bit is set to 1, the TL_STATUS bit status reflects the current temperature conversion result. The polarity of the DRDY/INT pin is set by INT_POL bit.

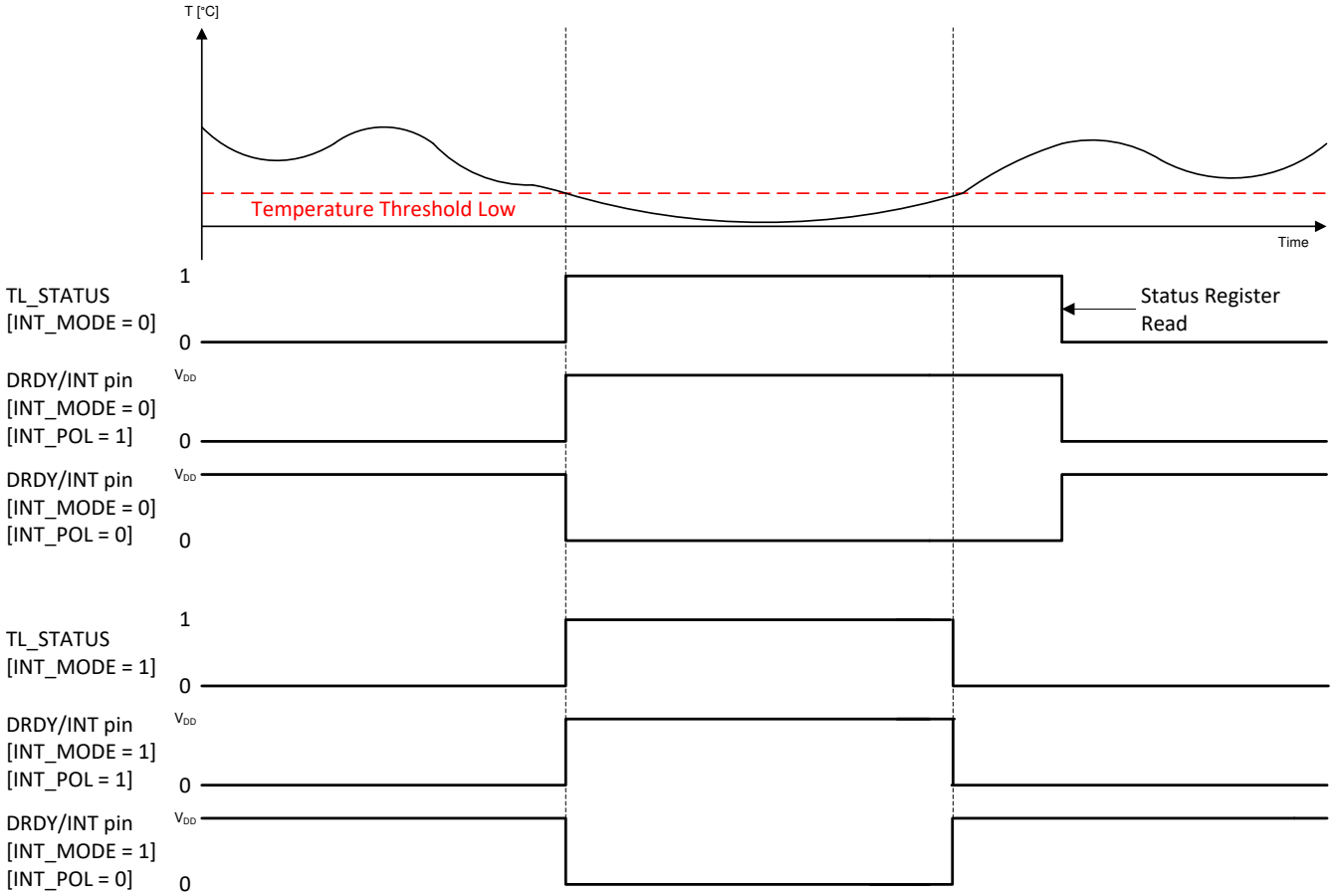

Figure 7-4. INTERRUPT on Threshold - Temperature Low

7.3.5.2.3 Humidity High (HH)

When HH_ENABLE is enabled in the Interrupt Configuration register (address 0x07) and the temperature is under the programmed threshold level stored in the Humidity Threshold HIGH register (address 0x0D), the HH_STATUS bit of the Status register (address 0x04) asserts to 1. The interrupt is cleared upon reading the Status register.

The polarity and interrupt mode of the HH_STATUS bit and the DRDY/INT pin can be configured through the INT_POL and INT_MODE bits of the Device Configuration Register (address 0x0E). The INT_MODE bit sets the threshold to either comparator mode or clear-on-read mode. When the INT_MODE bit is set to 0, the HH_STATUS bit remains set to 1 until it is read. When the INT_MODE bit is set to 1, the HH_STATUS bit status reflects the current temperature conversion result. The polarity of the DRDY/INT pin is set by INT_POL bit.

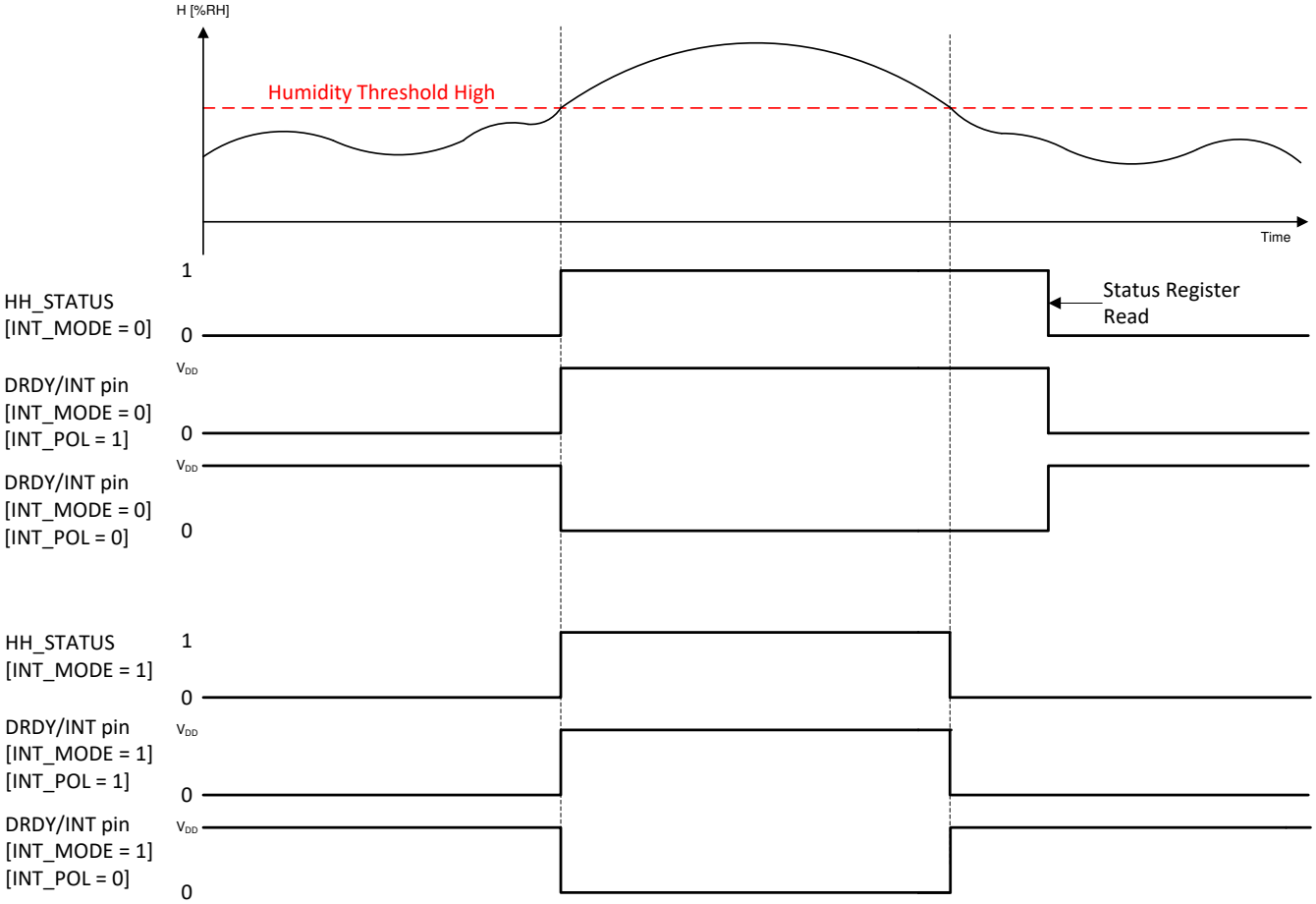

Figure 7-5. INTERRUPT on Threshold - Humidity High

Copyright © 2020 Texas Instruments Incorporated

7.3.5.2.4 Humidity Low (HL)

When HL_ENABLE is enabled in the Interrupt Configuration register (address 0x07) and the temperature is under the programmed threshold level stored in the Humidity Threshold HIGH register (address 0x0E), the HL_STATUS bit of the Status register (address 0x04) asserts to 1. The interrupt is cleared upon reading the Status register.

The polarity and interrupt mode of the HL_STATUS bit and the DRDY/INT pin can be configured through the INT_POL and INT_MODE bits of the Device Configuration Register (address 0x0E). The INT_MODE bit sets the threshold to either comparator mode or clear-on-read mode. When the INT_MODE bit is set to 0, the HL_STATUS bit remains set to 1 until it is read. When the INT_MODE bit is set to 1, the HL_STATUS bit status reflects the current temperature conversion result. The polarity of the DRDY/INT pin is set by INT_POL bit.

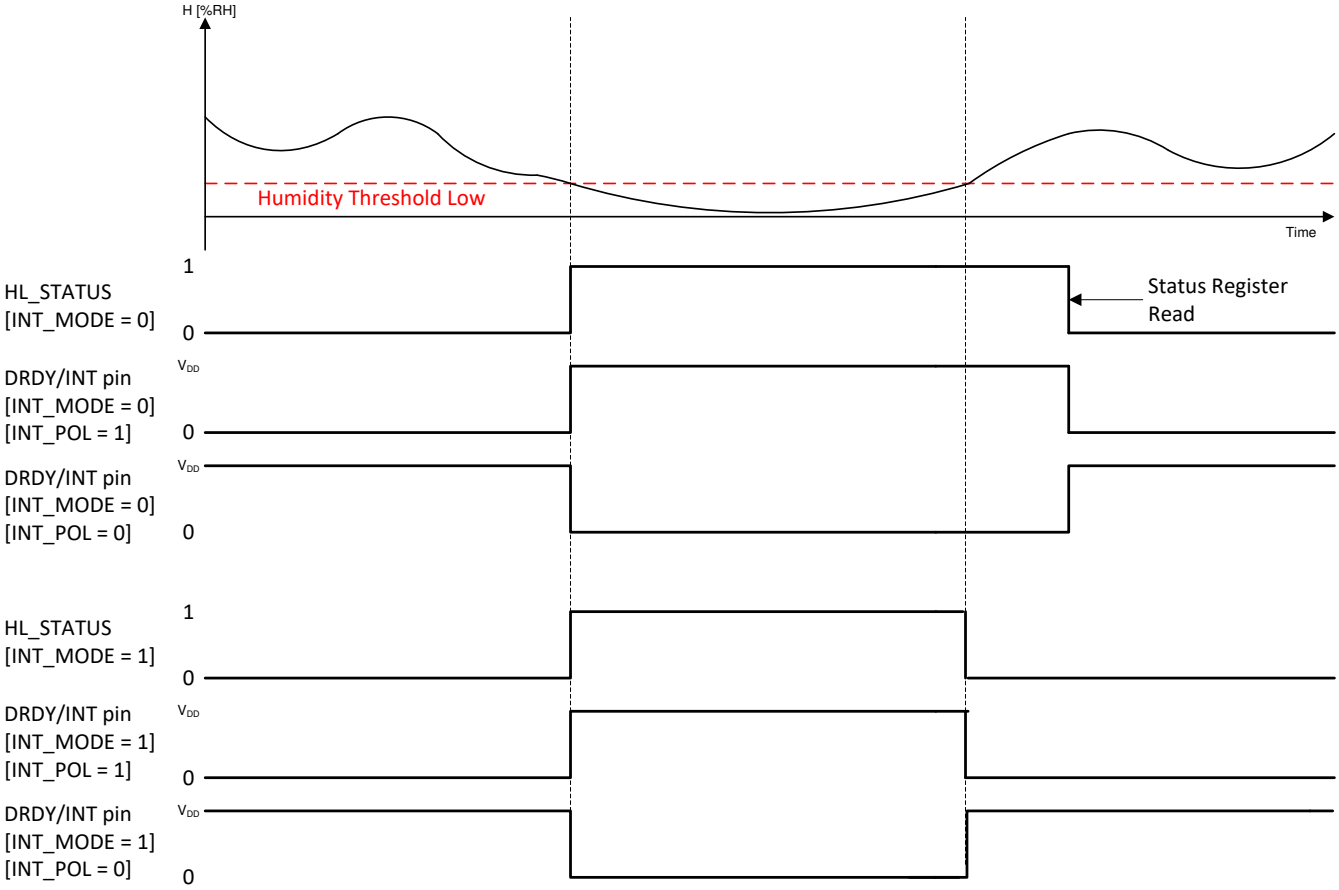

Figure 7-6. INTERRUPT on Threshold - Humidity Low

7.4 Device Functional Modes

The HDC2022 has two modes of operation: sleep mode and measurement mode.

7.4.1 Sleep Mode vs. Measurement Mode

After power up, the HDC2022 defaults to sleep mode and waits for an I^2C instruction to set programmable conversion times, trigger a measurement or conversion, or read or write valid data. When a measurement is triggered, the HDC2022 switches to measurement mode that converts temperature or humidity values from integrated sensors through an internal ADC and stores the information in their respective data registers. The DRDY/INT pin can be monitored to verify if data is ready after measurement conversion. The DRDY/INT pin polarity and interrupt mode are set according to the configuration of the Interrupt Configuration (address 0x07) and Device Configuration (address: 0x0E) registers. After completing the conversion, the HDC2022 returns to sleep mode.

7.5 Programming

7.5.1 I^2C Serial Bus Address Configuration

To communicate with the HDC2022, the master must first address slave devices through a slave address byte. The slave address byte consists of seven address bits and a direction bit that indicates the intent to execute a read or write operation. The HDC2022 features an address pin (ADDR) to allow up to 2 devices to be addressed on a single bus. Table 7-1 describes the pin logic levels used to connect up to two devices, with 'X' representing the read-write (R/W) bit. The ADDR pin shall be configured before any activity on the interface occurs and remain constant while the device is powered up.

Table 7-1. HDC2022 I^2C Slave Address

ADDR	ADDRESS
GND or floating	1000000X
V_{DD}	1000001X

Note that the ADDR is recommended not to be left floating if the device is to be used in noisy environment.

7.5.2 I^2C Interface

The HDC2022 operates only as a slave device on the I^2C bus interface. It is not allowed to have multiple devices on the same I^2C bus with the same address. Connection to the bus is made through the SDA and SCL pins. The SDA and SCL pins feature integrated spike-suppression filters and Schmitt triggers to minimize the effects of input spikes and bus noise. After power-up, the sensor needs at least 3.5 ms to be ready to start RH and temperature measurement. After power-up the device defaults in sleep mode until a communication or measurement is performed. All data bytes are transmitted MSB first.

7.5.3 Read and Write Operations

Register content of the HDC2022 can be accessed and modified through a pointer mechanism using a pointer register. The user can write a register address to the pointer register to access a particular register on the device. The value for the pointer register is the first byte transferred after the slave address byte with the R/W bit low (refer to Table 7-2). Every write operation to the device requires a value for the pointer register.

When reading from the device, the last value stored in the pointer register by a write operation is used to determine which register is read during a read operation. To change the register pointer for a read operation, a new value must be written to the pointer register. The user can issue an address byte with the R/W bit low, followed by the pointer register byte to write a new value for the pointer register (refer to Table 7-4). No additional data is required. The master can then generate a START condition and send the slave address byte with the R/W bit high to initiate the read command.

The device also support Multibyte write and Multibyte read operations of which the register pointer is incremented automatically until the master issues a STOP (for Multibyte write) or NACK (for Multibyte read).

Copyright © 2020 Texas Instruments Incorporated

Note all data transferred are sent MSB first. A write operation to a read-only register such as DEVICE ID or MANUFACTURER ID returns a NACK after each data byte. A read or write operation to an unused register returns a NACK after the pointer register byte, and a read or write operation with incorrect device slave address returns a NACK after the device slave address byte.

Table 7-2. Write Single Byte

Master	START	Device Slave address (W) 100000X0		Register Pointer		DATA		STOP
Slave			ACK		ACK		ACK	

Table 7-3. Write Multibyte

Master	START	Device Slave address (W) 100000X0		Register Pointer		DATA		DATA		……	STOP
Slave			ACK		ACK		ACK		ACK		

Table 7-4. Read Single Byte

Master	START	Device Slave address (W) 100000X0		Register Pointer		Start	Device Slave address (R) 100000X1			NACK	STOP
Slave			ACK		ACK			ACK	DATA		

Table 7-5. Read Multibyte

Master	START	Device Slave address (W) 100000X0		Register Pointer		Start	Device Slave address (R) 100000X1			ACK		ACK	……	NACK	STOP
Slave			ACK		ACK			ACK	DATA		DATA				

7.6 Register Maps

The HDC2022 contains registers that hold configuration information, temperature and humidity measurement results, and status information.

Table 7-6. Register Map

ADDRESS (HEX)	NAME	RESET VALUE (HEX)	DESCRIPTION
0x00	TEMPERATURE LOW	0	Temperature data [7:0]
0x01	TEMPERATURE HIGH	0	Temperature data [15:8]
0x02	HUMIDITY LOW	0	Humidity data [7:0]
0x03	HUMIDITY HIGH	0	Humidity data [15:8]
0x04	STATUS	0	DataReady and threshold status
0x05	TEMPERATURE MAX	0	Maximum measured temperature (one-shot mode only)
0x06	HUMIDITY MAX	0	Maximum measured humidity (one-shot mode only)
0x07	INTERRUPT ENABLE	0	Interrupt enable
0x08	TEMP_OFFSET_ADJUST	0	Temperature offset adjustment
0x09	HUM_OFFSET_ADJUST	0	Humidity offset adjustment
0x0A	TEMP_THR_L	1	Temperature threshold low
0x0B	TEMP_THR_H	FF	Temperature threshold high
0x0C	RH_THR_L	0	Humidity threshold low
0x0D	RH_THR_H	FF	Humidity threshold high
0x0E	DEVICE CONFIGURATION	0	Soft reset and interrupt reporting configuration
0x0F	MEASUREMENT CONFIGURATION	0	Device measurement configuration
0xFC	MANUFACTURER ID LOW	49	Manufacturer ID lower-byte
0xFD	MANUFACTURER ID HIGH	54	Manufacturer ID higher-byte
0xFE	DEVICE ID LOW	D0	Device ID lower-byte
0xFF	DEVICE ID HIGH	7	Device ID higher0byte

Copyright © 2020 Texas Instruments Incorporated

7.6.1 Temperature Low (Address: 0x00)

Table 7-7. Temperature Low Register (Address 0x00)

7	6	5	4	3	2	1	0
TEMP[7:0]							

Table 7-8. Temperature Low Register Field Descriptions

BIT	FIELD	TYPE	RESET (HEX)	DESCRIPTION
[7:0]	TEMPERATURE [7:0]	R	0	Temperature data- lower byte

The temperature data is a 16-bits value that spans accross the Temperature Low (address 0x00) and Temperature High (address 0x01) registers. The Temperature Low register containts the lower-byte of the 16-bits temperature data.

The temperature can be calculated from the output data using Equation 1:

$$\text{Temperature } (^{\circ}\text{C}) = \left(\frac{\text{TEMPERATURE } [15:0]}{2^{16}}\right) \times 165 - 40 \tag{1}$$

7.6.2 Temperature High (Address: 0x01)

Table 7-9. Temperature High Register (Address 0x01)

7	6	5	4	3	2	1	0
TEMP[15:8]							

Table 7-10. Temperature High Register Field Descriptions

BIT	FIELD	TYPE	RESET (HEX)	DESCRIPTION
[15:8]	TEMPERATURE [15:8]	R	0	Temperature data- higher byte

The temperature data is a 16-bits value that spans accross the Temperature Low (address 0x00) and Temperature High (address 0x01) registers. The Temperature High register containts the higher-byte of the 16-bits temperature data.

The temperature can be calculated from the output data using Equation 2:

$$\text{Temperature } (^{\circ}\text{C}) = \left(\frac{\text{TEMPERATURE } [15:0]}{2^{16}}\right) \times 165 - 40 \tag{2}$$

Copyright © 2020 Texas Instruments Incorporated

7.6.3 Humidity Low (Address 0x02)

Table 7-11. Humidity Low Register (Address 0x02)

7	6	5	4	3	2	1	0
HUMIDITY[7:0]							

Table 7-12. Humidity Low Register Field Descriptions

BIT	FIELD	TYPE	RESET (HEX)	DESCRIPTION
[7:0]	HUMIDITY [7:0]	R	0	Humidity data- lower byte

The humidity data is a 16-bits value that spans accross the Humidity Low (address 0x02) and Humidity High (address 0x03) registers. The Humidity Low register containts the lower-byte of the 16-bits humidity data.

The humidity can be calculated from the output data using Equation 3:

$$\text{Humidity (\%RH)} = \left(\frac{\text{HUMIDITY [15 : 0]}}{2^{16}}\right) \times 100 \tag{3}$$

7.6.4 Humidity High (Address 0x03)

Table 7-13. Humidity High Register (Address 0x03)

7	6	5	4	3	2	1	0
HUMIDITY[15:8]							

Table 7-14. Humidity High Register Field Descriptions

BIT	FIELD	TYPE	RESET (HEX)	DESCRIPTION
[15:8]	HUMIDITY[15:8]	R	0	Humidity data- higher byte

The humidity data is a 16-bits value that spans accross the Humidity Low (address 0x02) and Humidity High (address 0x03) registers. The Humidity High register containts the higher-byte of the 16-bits temperature data.

The humidity can be calculated from the output data using Equation 4:

$$\text{Humidity (\%RH)} = \left(\frac{\text{HUMIDITY [15 : 0]}}{2^{16}}\right) \times 100 \tag{4}$$

Copyright © 2020 Texas Instruments Incorporated

7.6.5 Status (Address 0x04)

Table 7-15. Status Register (Address 0x04)

7	6	5	4	3	2	1	0
DRDY_STATUS	TH_STATUS	TL_STATUS	HH_STATUS	HL_STATUS	RES	RES	RES

Table 7-16. Status Register Field Descriptions

BIT	FIELD	TYPE	RESET (HEX)	DESCRIPTION
7	DRDY_STATUS	R	0	DataReady bit status 0 = Data Not Ready 1 = Data Ready
6	TH_STATUS	R	0	Temperature threshold HIGH Interrupt status 0 = No interrupt 1 = Interrupt
5	TL_STATUS	R	0	Temperature threshold LOW Interrupt status 0 = No interrupt 1 = Interrupt
4	HH_STATUS	R	0	Humidity threshold HIGH Interrupt status 0 = No interrupt 1 = Interrupt
3	HL_STATUS	R	0	Humidity threshold LOW Interrupt status 0 = No interrupt 1 = Interrupt
2	RES		0	Reserved
1	RES		0	Reserved
0	RES		0	Reserved

The DRDY_STATUS bit indicates that temperature and/or humidity conversion is completed, and its behavior is defined by the Device Configuration Register (0x0E). This bit is cleared when the any of the following registers is read: Temperature Low (0x00), Temperature High (0x01), Humidity Low (0x02), Humidity High (0x03), and Status (0x04). The bit is also cleared upon RESET.

The TL_STATUS bit indicates that the *Temperature Threshold LOW* value is exceeded, and its behavior is defined by the Device Configuration Register (0x0E). The bit is cleared when the Status Register (0x04) is read. The bit is also cleared upon RESET.

The TH_STATUS bit indicates that the *Temperature Threshold HIGH* value is exceeded, and its behavior is defined by the 0x0E Configuration register value. The bit is cleared when the Status Register (0x04) is read. The bit is also cleared upon RESET.

The HH_STATUS bit indicates that the *Humidity Threshold HIGH* value is exceeded, and its behavior is defined by the Device Configuration Register (0x0E). The bit is cleared when the Status Register (0x04) is read. The bit is also cleared upon RESET.

The HL_STATUS bit indicates that the *Humidity Threshold LOW* value is exceeded, and its behavior is defined by the Device Configuration Register (0x0E). The bit is cleared when the Status Register (0x04) is read. The bit is also cleared upon RESET.

Copyright © 2020 Texas Instruments Incorporated

7.6.6 Temperature MAX (Address: 0x05)

Table 7-17. Temperature MAX Register (Address: 0x05)

7	6	5	4	3	2	1	0
TEMPERATUREMAX[7:0]							

Table 7-18. Temperature Max Field Descriptions

BIT	FIELD	TYPE	RESET [HEX]	DESCRIPTION
[7:0]	TEMPERATUREMAX[7:0]	R	0	Maximum temperature measurement data (one-shot mode only)

This register implements temperature peak detector function. The register stores the highest temperature value converted after the last reset (power-on reset or software reset).

The temperature can be calculated from the output data using Equation 5:

$$\text{Temperature } (^{\circ}\text{C}) = \left(\frac{\text{TEMPERATURE } [7:0]}{2^8}\right) \times 165 - 40 \tag{5}$$

7.6.7 Humidity MAX (Address: 0x06)

Table 7-19. Humidity MAX Register (Address: 0x06)

7	6	5	4	3	2	1	0
HUMIDITYMAX[7:0]							

Table 7-20. Humidity MAX Field Descriptions

BIT	FIELD	TYPE	RESET (HEX)	DESCRIPTION
[7:0]	HUMIDITYMAX[7:0]	R	0	Maximum humidity measurement data (one-shot mode only)

This register implements humidity peak detector function. The register stores the highest humidity value converted after the last reset (power-on reset or software reset).

The humidity can be calculated from the output data using Equation 6:

$$\text{Humidity } (\%\text{RH}) = \text{HUMIDITYMAX}[7:0] \times \left(\frac{100}{2^8}\right) \tag{6}$$

Copyright © 2020 Texas Instruments Incorporated

7.6.8 Interrupt Enable (Address: 0x07)

Table 7-21. Interrupt Enable Register (Address: 0x07)

7	6	5	4	3	2	1	0
DRDY_ENABLE	TH_ENABLE	TL_ENABLE	HH_ENABLE	HL_ENABLE	RES	RES	RES

Table 7-22. Interrupt Enable Register Field Descriptions

BIT	FIELD	TYPE	RESET (HEX)	DESCRIPTION
7	DRDY_ENABLE	R/W	0	DataReady Interrupt enable 0 = DataReady Interrupt disabled 1 = DataReady Interrupt enabled
6	TH_ENABLE	R/W	0	Temperature threshold HIGH Interrupt enable 0 = Temperature high Interrupt disabled 1 = Temperature high Interrupt enabled
5	TL_ENABLE	R/W	0	Temperature threshold LOW Interrupt enable 0 = Temperature low Interrupt disabled 1 = Temperature low Interrupt enabled
4	HH_ENABLE	R/W	0	Humidity threshold HIGH Interrupt enable 0 = Humidity high Interrupt disabled 1 = Humidity high Interrupt enabled
3	HL_ENABLE	R/W	0	Humidity threshold LOW Interrupt enable 0 = Humidity low Interrupt disabled 1 = Humidity low Interrupt enabled
2	RES		0	Reserved
1	RES		0	Reserved
0	RES		0	Reserved

The Interrupt Enable register enables or disables interrupt asserstion on the DRDY/INT pin from DataReady, Temperature threshold High, Temperature threshold Low, Humidity threshold High, or Humidity threshold Low. The Status register (address 0x04) content is unaffected by this register.

Note the settings of this regsiter only takes effect if the DRDY/INT_EN bit of the Device Configuration register (address 0x0E) is set to 1.

Copyright © 2020 Texas Instruments Incorporated

7.6.9 Temperature Offset Adjustment (Address: 0x08)

Table 7-23. Temperature Offset Adjustment Register (Address: 0x08)

7	6	5	4	3	2	1	0
TEMP_OFFSET_ADJUST[7:0]							

Table 7-24. Temperature Offset Adjustment Register Field Descriptions

BIT	FIELD	TYPE	RESET (HEX)	DESCRIPTION
[7:0]	TEMP_OFFSET_ADJUST [7:0]	R/W	0	Temperature offset adjustment value. The value is added to the converted temperature data.

The reported temperature conversion data can be adjusted by programming the Temperature Offset Adjustment Register. The following table summarizes the equivalent offset value added or subtracted for each bit of the register:

7	6	5	4	3	2	1	0
–20.63°C	+10.31°C	+5.16°C	+2.58°C	+1.29°C	+0.64°C	+0.32°C	+0.16°C

The value is added to the converted temperature value for offset adjustment as shown in Figure 7-7.

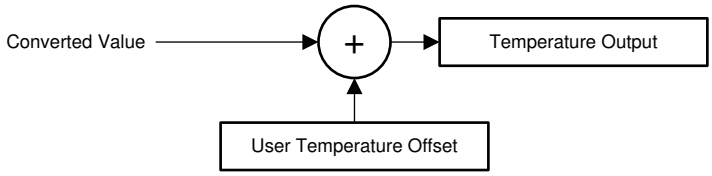

Figure 7-7. Temperature Output Calculation

The resulting temperature offset is a summation of the register bits that have been enabled (that is, programmed to 1). Some examples:

1. Programming TEMP_OFFSET_ADJUST to 00000001 adjusts the reported temperature by +0.16°C.
2. Programming TEMP_OFFSET_ADJUST to 00000111 adjusts the reported temperature by +1.12°C.
3. Programming TEMP_OFFSET_ADJUST to 00001101 adjusts the reported temperature by +2.08°C.
4. Programming TEMP_OFFSET_ADJUST to 11111111 adjusts the reported temperature by –0.16°C.
5. Programming TEMP_OFFSET_ADJUST to 11111001 adjusts the reported temperature by –1.12°C.
6. Programming TEMP_OFFSET_ADJUST to 11110011 adjusts the reported temperature by –2.08°C.

Copyright © 2020 Texas Instruments Incorporated

7.6.10 Humidity Offset Adjustment (Address 0x09)

Table 7-25. Humidity Offset Adjustment Register (Address: 0x09)

7	6	5	4	3	2	1	0
HUM_OFFSET_ADJUST [7:0]							

Table 7-26. Humidity Offset Adjustment Register Field Descriptions

BIT	FIELD	TYPE	RESET (HEX)	DESCRIPTION
[7:0]	HUM_OFFSET_ADJUST [7:0]	R/W	0	Humidity offset adjustment value. The value is added to the converted humidity data.

The reported humidity conversion data can be adjusted by programming the Humidity Offset Adjustment Register. The following table summarizes the equivalent offset value added or subtracted for each bit of the register:

7	6	5	4	3	2	1	0
–25%RH	+12.5%RH	+6.3%RH	+3.1%RH	+1.6%RH	+0.8%RH	+0.4%RH	+0.2%RH

The value is added to the converted humidity value for offset adjustment as shown in Figure 7-8

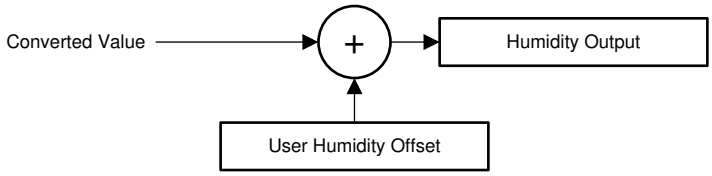

Figure 7-8. Humidity Output Calculation

The resulting humidity offset is a summation of the register bits that have been enabled (that is, programmed to 1). Some examples:

1. Programming HUM_OFFSET_ADJUST to 00000001 adjusts the reported humidity by +0.20%RH.
2. Programming HUM_OFFSET_ADJUST to 00000101 adjusts the reported humidity by +1.00%RH.
3. Programming HUM_OFFSET_ADJUST to 00001010 adjusts the reported humidity by +2.00%RH.
4. Programming HUM_OFFSET_ADJUST to 11111111 adjusts the reported humidity by –0.10%RH.
5. Programming HUM_OFFSET_ADJUST to 11111011 adjusts the reported humidity by –0.90%RH.
6. Programming HUM_OFFSET_ADJUST to 11110101 adjusts the reported humidity by –2.10%RH.

Copyright © 2020 Texas Instruments Incorporated

7.6.11 Temperature Threshold LOW (Address 0x0A)

Table 7-27. Temperature Threshold LOW Register (Address: 0x0A)

7	6	5	4	3	2	1	0
TEMP_THRES_LOW[7:0]							

Table 7-28. Temperature Threshold LOW Field Descriptions

BIT	FIELD	TYPE	RESET (HEX)	DESCRIPTION
[7:0]	TEMP_THRES_LOW[7:0]	R/W	1	Temperature threshold LOW value

The Temperature Threshold LOW register configures the temperature threshold setting for interrupt generation if the TL_ENABLE interrupt is enabled. The threshold value can be calculated using Equation 7:

$$\text{Temperature threshold low } (^{\circ}\text{C}) = \left(\frac{\text{TEMP_THRES_LOW } [7:0]}{2^8}\right) \times 165 - 40 \tag{7}$$

7.6.12 Temperature Threshold HIGH (Address 0x0B)

Table 7-29. Temperature Threshold HIGH Register (Address 0x0B)

7	6	5	4	3	2	1	0
TEMP_THRES_HIGH[7:0]							

Table 7-30. Temperature Threshold HIGH Register Field Descriptions

BIT	FIELD	TYPE	RESET (HEX)	DESCRIPTION
[7:0]	TEMP_THRES_HIGH[7:0]	R/W	FF	Temperature threshold HIGH value

The Temperature Threshold HIGH register configures the temperature threshold setting for interrupt generation if the TH_ENABLE interrupt is enabled. The threshold value can be calculated using Equation 8:

$$\text{Temperature threshold high } (^{\circ}\text{C}) = \left(\frac{\text{TEMP_THRES_HIGH } [7:0]}{2^8}\right) \times 165 - 40 \tag{8}$$

Copyright © 2020 Texas Instruments Incorporated

7.6.13 Humidity Threshold LOW (Address 0x0C)

Table 7-31. Humidity Threshold LOW Register (Address 0x0C)

7	6	5	4	3	2	1	0
HUMI_THRES_LOW[7:0]							

Table 7-32. Humidity Threshold LOW Register Field Descriptions

BIT	FIELD	TYPE	RESET (HEX)	DESCRIPTION
[7:0]	HUMI_THRES_LOW[7:0]	R/W	0	Humidity threshold LOW value

The Humidity Threshold LOW register configures the humidity threshold setting for interrupt generation if the HL_ENABLE interrupt is enabled. The threshold value can be calculated with using Equation 9:

$$\text{Humidity threashold low (\%RH)} = \left(\frac{\text{HUMI_THRES_LOW [7:0]}}{2^8}\right) \times 100 \tag{9}$$

7.6.14 Humidity Threshold HIGH (Address 0x0D)

Table 7-33. Humidity Threshold HIGH Register (Address: 0x0D)

7	6	5	4	3	2	1	0
HUMI_THRES_HIGH[7:0]							

Table 7-34. Humidity Threshold HIGH Register Field Descriptions

BIT	FIELD	TYPE	RESET (HEX)	DESCRIPTION
[7:0]	HUMI_THRES_HIGH[7:0]	R/W	FF	Humidity threshold HIGH value

The Humidity Threshold HIGH register configures the temperature threshold setting for interrupt generation if the HH_ENABLE interrupt is enabled. The threshold value can be calculated using Equation 10:

$$\text{Humidity threshold high (\%RH)} = \left(\frac{\text{HUMI_THRES_HIGH [7:0]}}{2^8}\right) \times 100 \tag{10}$$

Copyright © 2020 Texas Instruments Incorporated

7.6.15 Device Configuration (Address: 0x0E)

Table 7-35. Device Configuration Register (Address: 0x0E)

7	6	5	4	3	2	1	0
SOFT_RES	CC[2:0]			HEAT_EN	DRDY/INT_EN	INT_POL	INT_MODE

Table 7-36. Device Configuration Register Field Descriptions

BIT	FIELD	TYPE	RESET (HEX)	DESCRIPTION
7	SOFT_RES	R/W	0	0 = Normal Operation 1 = Trigger a Soft Reset. This bit self-clears after RESET.
[6:4]	CC[2:0]	R/W	0	Configure the measurement mode to one-shot or continuous conversion. The bits also allow sampling frequency to be programmed in continuous conversion mode. 000 = Continuous conversion disabled (one-shot mode) 001 = 1/120Hz (1 samples every 2 minutes) 010 = 1/60Hz (1 samples every minute) 011 = 0.1Hz (1 samples every 10 seconds) 100 = 0.2 Hz (1 samples every 5 second) 101 = 1Hz (1 samples every second) 110 = 2Hz (2 samples every second) 111 = 5Hz (5 samples every second)
3	HEAT_EN	R/W	0	0 = Heater off 1 = Heater on
2	DRDY/INT_EN	R/W	0	DRDY/INT_EN pin configuration 0 = High Z 1 = Enable
1	INT_POL	R/W	0	Interrupt polarity 0 = Active Low 1 = Active High
0	INT_MODE	R/W	0	Interrupt mode 0 = Clear-on-read mode 1 = Comparator mode

Copyright © 2020 Texas Instruments Incorporated

7.6.16 Measurement Configuration (Address: 0x0F)

Table 7-37. Measurement Configuration Register (Address: 0x0F)

7	6	5	4	3	2	1	0
TACC[1:0]		HACC[1:0]		RES	MEAS_CONF[1:0]		MEAS_TRIG

Table 7-38. Measurement Configuration Register Field Descriptions

BIT	FIELD	TYPE	RESET (HEX)	DESCRIPTION
7:6	TACC[1:0]	R/W	0	Temperature accuracy option: 00: 14 bit 01: 11 bit 10: 9 bit 11: NA
5:4	HACC[1:0]	R/W	0	Humidity accuracy option: 00: 14 bit 01: 11 bit 10: 9 bit 11: NA
3	RES	R/W	0	Reserved
2:1	MEAS_CONF[1:0]	R/W	0	Measurement configuration: 00: Humidity + Temperature 01: Temperature only 10: NA 11: NA
0	MEAS_TRIG	R/W	0	Measurement trigger: 0: No action 1: Start measurement Setting this bit to 1 to start a single measurement in one-shot mode or continuous measurements in continuous conversion mode. This bit self-clears to 0 once the measurement starts.

7.6.17 Manufacturer ID Low (Address: FC)

Table 7-39. Manufacturer ID Low Register (Address: FC)

7	6	5	4	3	2	1	0
MANUFACTURER ID[7:0]							

Table 7-40. Manufacturer ID Low Field Descriptions

BIT	FIELD	TYPE	RESET (HEX)	DESCRIPTION
[7:0]	MANUFACTURER ID [7:0]	R	49	Manufacturer ID- lower byte value

The Manufacturer ID Low and Manufacturer ID High registers contain a factory-programmable identification value that identifies this device as being manufactured by Texas Instruments. The manufacturer ID helps distinguish the device from other devices that are on the same I2C bus. The manufacturer ID reads 0x5449 and spans across the two registers.

7.6.18 Manufacturer ID High (Address: FD)

Table 7-41. Manufacturer ID High Register (Address: FD)

7	6	5	4	3	2	1	0
MANUFACTURER ID[15:8]							

Table 7-42. Manufacturer ID High Register Field Descriptions

BIT	FIELD	TYPE	RESET (HEX)	DESCRIPTION
[7:0]	MANUFACTURER ID [15:8]	R	54	Manufacturer ID- higher byte value

The Manufacturer ID Low and Manufacturer ID High registers contain a factory-programmable identification value that identifies this device as being manufactured by Texas Instruments. The manufacturer ID helps distinguish the device from other devices that are on the same I2C bus. The manufacturer ID reads 0x5449 and spans across the two registers.

7.6.19 Device ID Low (Address: FE)

Table 7-43. Device ID Low Register (Address: FE)

7	6	5	4	3	2	1	0
DEVICE ID[7:0]							

Table 7-44. Device ID Low Register Field Descriptions

BIT	FIELD	TYPE	RESET (HEX)	DESCRIPTION
[7:0]	DEVICE ID [7:0]	R	D0	Device ID - lower byte value

The Device ID Low and Device ID High registers contain a factory-programmable identification value that identifies this device as a HDC2022. The device ID helps distinguish the device from other devices that are on the same I2C bus. The Device ID for the HDC2022 is 0x07D0.

7.6.20 Device ID High (Address: FF)

Table 7-45. Device ID High Register (Address: FF)

7	6	5	4	3	2	1	0
DEVICE ID[15:8]							

Table 7-46. Device ID High Register Field Descriptions

BIT	FIELD	TYPE	RESET (HEX)	DESCRIPTION
[7:0]	DEVICE ID [15:8]	R	7	Device ID - higher byte value

The Device ID Low and Device ID High registers contain a factory-programmable identification value that identifies this device as a HDC2022. The device ID helps distinguish the device from other devices that are on the same I2C bus. The Device ID for the HDC2022 is 0x07D0.

Copyright © 2020 Texas Instruments Incorporated

8 Application and Implementation

Note

Information in the following applications sections is not part of the TI component specification, and TI does not warrant its accuracy or completeness. TI's customers are responsible for determining suitability of components for their purposes. Customers should validate and test their design implementation to confirm system functionality.

8.1 Application Information

An HVAC system thermostat control is made up of environmental sensors and a microcontroller. The microcontroller acquires data from humidity and temperature sensors and controls the heating and cooling system. The collected data are then shown on a display that can be easily controlled by the microcontroller. Based on data from the humidity and temperature sensor, the heating and cooling system then maintains the environment at the customer-defined preferred conditions.

8.2 Typical Application

In a battery-powered HVAC system thermostat, one of the key parameters in the selection of components is the power consumption. The HDC2022, with a current consumption of 550 nA (the average consumption over 1s for RH and Temperature measurements), and in conjunction with the MSP430, represents one way an engineer can obtain low power consumption to extend battery life. A system block diagram of a battery-powered thermostat is shown in Figure 8-1.

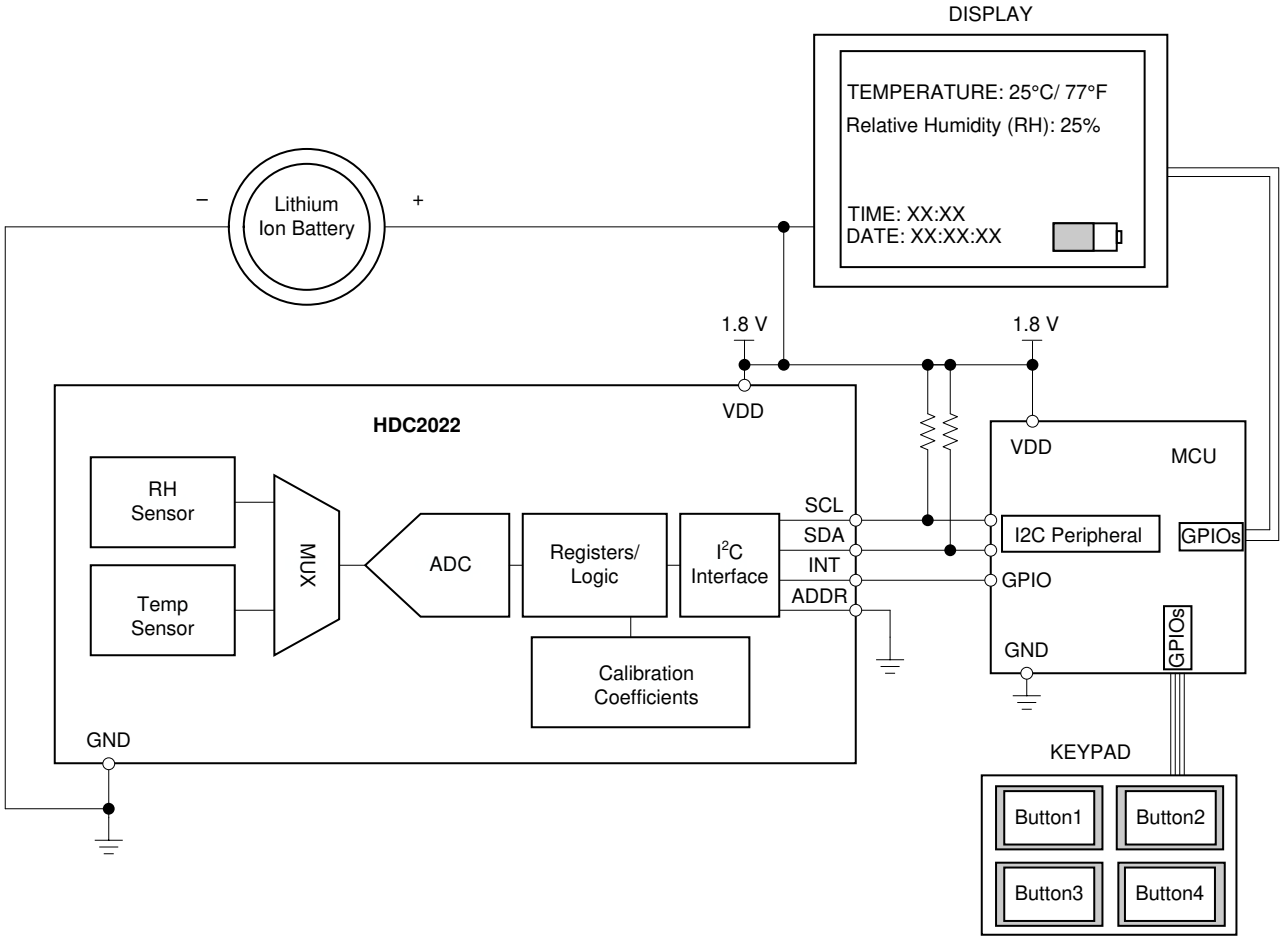

Figure 8-1. Typical Application Schematic HVAC

8.2.1 Design Requirements

To improve measurement accuracy, TI recommends to isolate the HDC2022 from all heat sources in the form of active circuitry, batteries, displays, and resistive elements. If design space is a constraint, cutouts surrounding the device or the inclusion of small trenches can help minimize heat transfer from PCB heat sources to the HDC2022. To avoid self-heating the HDC2022, TI recommends to configure the device for a maximum sample rate of 1 Hz (1 sps).

8.2.2 Detailed Design Procedure

When a circuit board layout is created from the schematic shown in Figure 8-1 , a small circuit board is possible. The accuracy of a RH and temperature measurement depends on the sensor accuracy and the setup of the sensing system. The HDC2022 samples relative humidity and temperature in its immediate environment, it is therefore important that the local conditions at the sensor match the monitored environment. Use one or more openings in the physical cover of the thermostat to obtain a good airflow even in static conditions. Refer to the layout (Figure 10-1) for a PCB layout that minimizes the thermal mass of the PCB in the region of the HDC2022, which can improve measurement response time and accuracy.

8.2.3 Application Curve

These results were acquired at T_A = 30°C using a humidity chamber that sweeps RH%. The sweep profile used was 20% > 30% > 40% > 50% > 60% > 70% > 60% > 50% > 40% > 30% > 20%. Each RH% set point was held for 20 minutes.

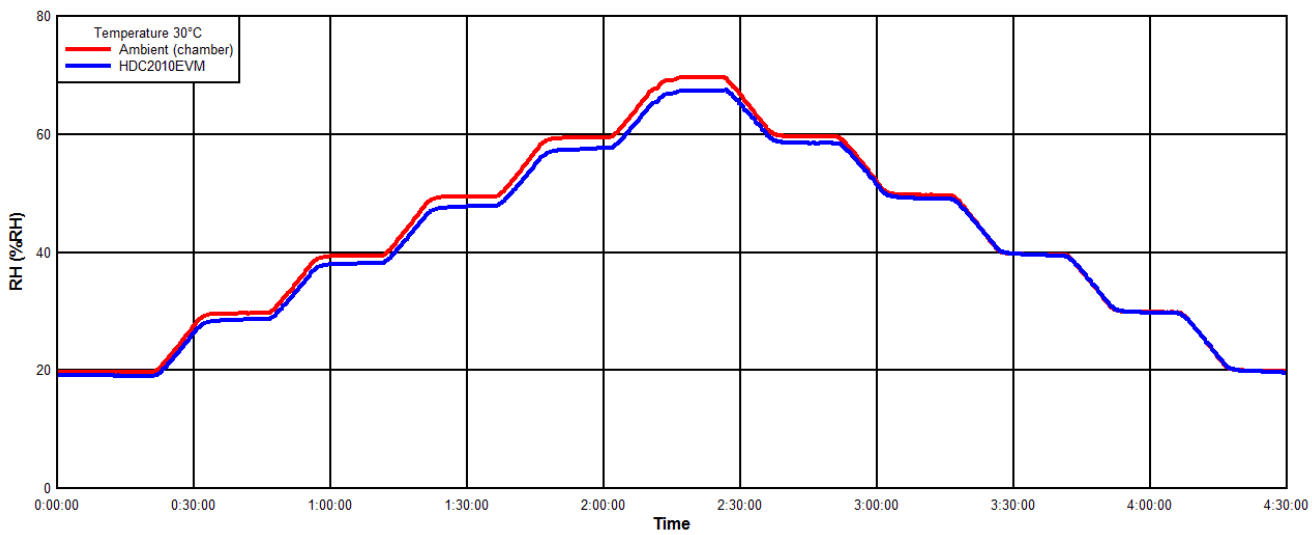

Figure 8-2. RH% Readings of Humidity Chamber and HDC2022 vs. Time

Copyright © 2020 Texas Instruments Incorporated

9 Power Supply Recommendations

The HDC2022 requires a voltage supply within 1.62 V and 3.6 V. TI recommends a multilayer ceramic bypass X7R capacitor of 0.1 µF between the V_{DD} and GND pins located close to the device.

10 Layout

10.1 Layout Guidelines

The HDC2022's relative humidity-sensing element is located on the top side of the package.

TI recommends that the user eliminate the copper layers below the device (GND, V_{DD}) and create slots in the PCB around the device to enhance the thermal isolation of the HDC2022. To ensure the temperature sensor performance, TI highly recommends that the user follow the Land Pattern, Solder Mask, and Solder Paste examples depicted in the *Mechanical, Packaging, and Orderable Information*section.

10.1.1 Guidelines for HDC2022 Storage and PCB Assembly

10.1.1.1 Storage and Handling

As with all humidity sensors, the HDC2022 must follow special guidelines regarding handling and storage that are not common with standard semiconductor devices. Long exposure to UV and visible light, or exposure to chemical vapors for prolonged periods, should be avoided as it may affect RH% accuracy. Additionally, the device should be protected from out-gassed solvent vapors produced during manufacturing, transport, operation, and package materials (that is, adhesive tapes, stickers, bubble foils). For further detailed information, see *Humidity Sensor: Storage and Handling Guidelines* (SNIA025).

10.1.1.2 Soldering Reflow

For PCB assembly, standard reflow soldering ovens may be used. The HDC2022 uses the standard soldering profile IPC/JEDEC J-STD-020 with peak temperatures at 260°C. When soldering the HDC2022, it is mandatory to use *no-clean* solder paste, and the paste must not be exposed to water or solvent rinses during assembly because these contaminants may affect sensor accuracy. After reflow, it is expected that the sensor will generally output a shift in relative humidity, which will reduce over time as the sensor is exposed to typical indoor ambient conditions. These conditions include 30-40% RH at room temperature during a duration of several days. Following this rehydration procedure allows the polymer to correctly settle after reflow and return to the calibrated RH accuracy.

10.1.1.3 Rework

TI recommends to limit the HDC2022 to a single IR reflow with no rework, but a second reflow may be possible if the following guidelines are met:

- The exposed polymer (humidity sensor) is kept clean and undamaged.
- The no-clean solder paste is used and the process is not exposed to any liquids, such as water or solvents.
- The peak soldering temperature does not exceed 260°C.

10.1.1.4 High Temperature and Humidity Exposure

Long exposure outside the recommended operating conditions may temporarily offset the RH output. The recommended humidity operating range is 20% to 80% RH (non-condensing) over 0°C to 60°C. Prolonged operation beyond these ranges may shift the sensor reading with a slow recovery time.

10.1.1.5 Bake/Rehydration Procedure

Prolonged exposure to extreme conditions or harsh contaminants may impact sensor performance. In the case that permanent offset is observed from contaminants, the following procedure is suggested, which may recover or reduce the error observed in sensor performance:

1. Baking: 100°C, at less than 5%RH, for 5 to 10 hours
2. Rehydration: Between 20°C to 30°C, 60%RH to 75%RH, for 6 to 12 hours

Copyright © 2020 Texas Instruments Incorporated

10.2 Layout Example

The only component next to the device is the supply decoupling capacitor. The relative humidity is dependent on the temperature, so the HDC2022 should be positioned away from hot spots present on the board, such as a battery, display, or microcontroller. Slots around the device can be used to reduce the thermal mass for a quicker response to environmental changes.

The device package has a thermal pad which can be soldered to the PCB. The thermal pad can be left floated or connected to the ground. Applying a different voltage other than ground to thermal pad can lead to permanent device damage. If the user intends to use the integrated heater in the device, it is recommended NOT to solder the thermal pad to PCB to achieve faster heating response.

The below diagram shows an example layout of the device on a single-layer PCB board with no VIAs and ADDR pin grounded.

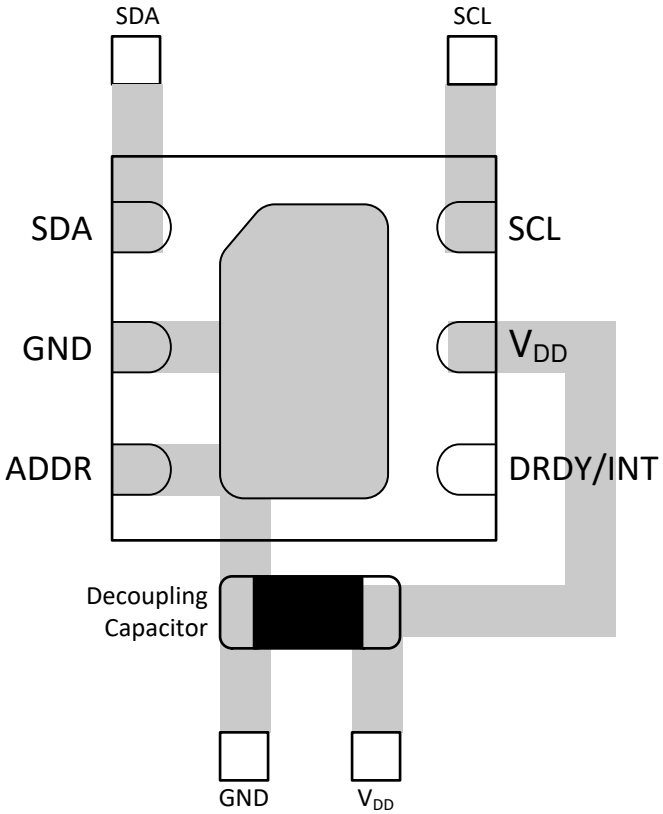

TI does NOT recommend to solder the thermal pad to PCB to achieve faster heating response if the integrated heater is used.

Figure 10-1. HDC2022 PCB Layout Example

Copyright © 2020 Texas Instruments Incorporated

11 Device and Documentation Support

11.1 Documentation Support

11.1.1 Related Documentation

For related documentation see the following:

- Texas Instruments, *Humidity Sensor: Storage and Handling Guidelines* application report (SNIA025)
- Texas Instruments, *Optimizing Placement and Routing for Humidity Sensors* application report (SNAA297)

11.2 Receiving Notification of Documentation Updates

To receive notification of documentation updates, navigate to the device product folder on ti.com. Click on *Subscribe to updates* to register and receive a weekly digest of any product information that has changed. For change details, review the revision history included in any revised document.

11.3 Support Resources

TI E2E™ support forums are an engineer's go-to source for fast, verified answers and design help — straight from the experts. Search existing answers or ask your own question to get the quick design help you need.

Linked content is provided "AS IS" by the respective contributors. They do not constitute TI specifications and do not necessarily reflect TI's views; see TI's Terms of Use.

11.4 Trademarks

TI E2E™ is a trademark of Texas Instruments Incorporated.
All other trademarks are the property of their respective owners.

11.5 Electrostatic Discharge Caution

This integrated circuit can be damaged by ESD. Texas Instruments recommends that all integrated circuits be handled with appropriate precautions. Failure to observe proper handling and installation procedures can cause damage.

ESD damage can range from subtle performance degradation to complete device failure. Precision integrated circuits may be more susceptible to damage because very small parametric changes could cause the device not to meet its published specifications.

11.6 Glossary

TI Glossary This glossary lists and explains terms, acronyms, and definitions.

12 Mechanical, Packaging, and Orderable Information

The following pages include mechanical, packaging, and orderable information. This information is the most current data available for the designated devices. This data is subject to change without notice and revision of this document. For browser-based versions of this data sheet, refer to the left-hand navigation.

Copyright © 2020 Texas Instruments Incorporated

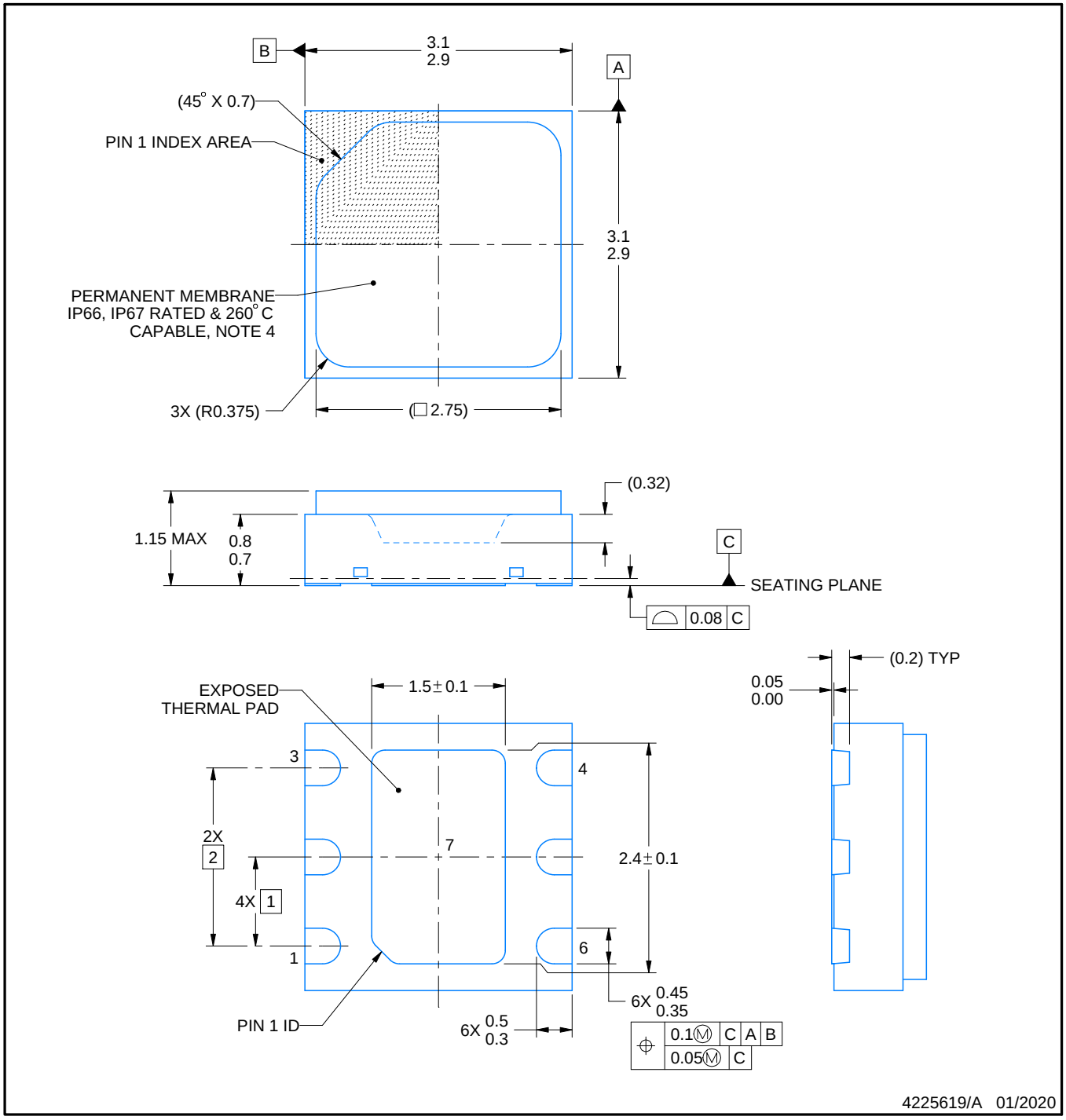

NOTES:

1. All linear dimensions are in millimeters. Any dimensions in parenthesis are for reference only. Dimensioning and tolerancing per ASME Y14.5M.
2. This drawing is subject to change without notice.
3. The package thermal pad must be soldered to the printed circuit board for thermal and mechanical performance.
4. IPXY Rating represents environmental ingress protection from both dust and high pressure water sprays. X=6 represents resistance to dust, Y=6 represents high pressure water spray resistance and Y=7 allows 1m water submersion per IEC60529 testing conditions.

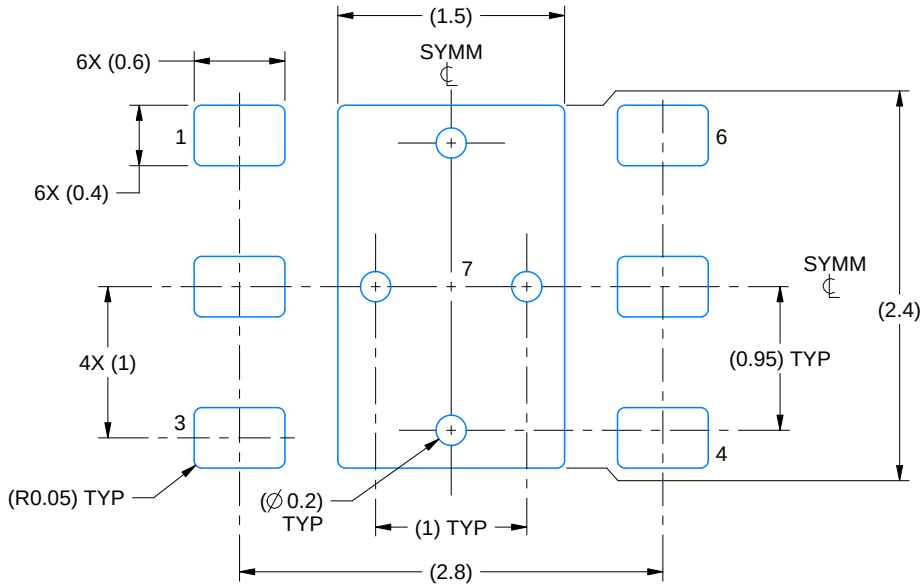

LAND PATTERN EXAMPLE
EXPOSED METAL SHOWN
SCALE:20X

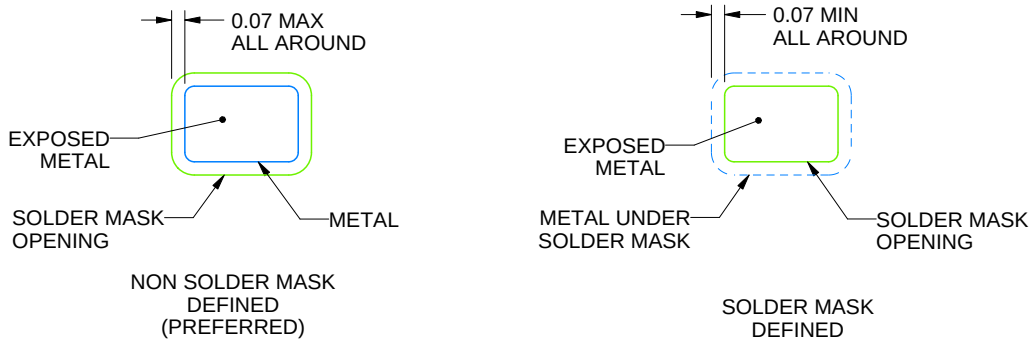

SOLDER MASK DETAILS

4225619/A 01/2020

NOTES: (continued)

5. This package is designed to be soldered to a thermal pad on the board. For more information, see Texas Instruments literature number SLUA271 (www.ti.com/lit/slua271).
6. Vias are optional depending on application, refer to device data sheet. If any vias are implemented, refer to their locations shown on this view. It is recommended that vias under paste be filled, plugged or tented.

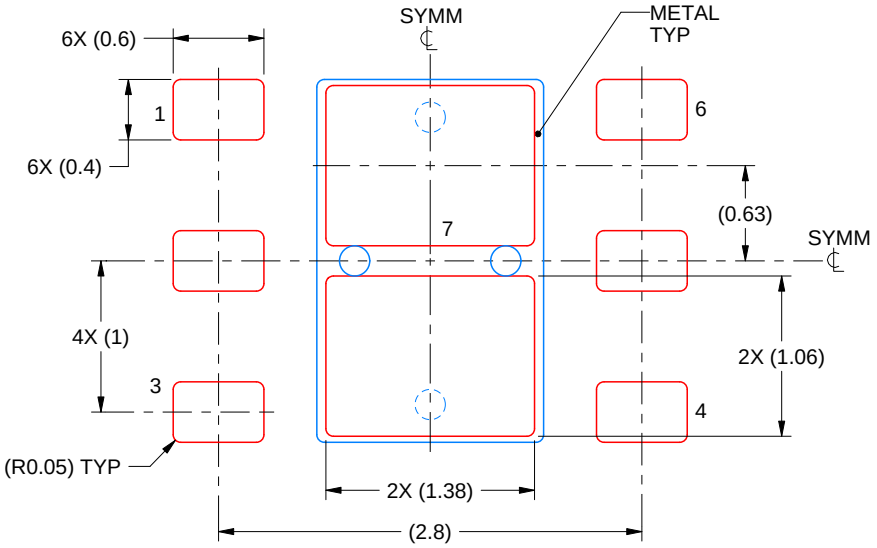

SOLDER PASTE EXAMPLE
BASED ON 0.125 mm THICK STENCIL

EXPOSED PAD 7:
81% PRINTED SOLDER COVERAGE BY AREA UNDER PACKAGE
SCALE:20X

4225619/A 01/2020

NOTES: (continued)

7. Laser cutting apertures with trapezoidal walls and rounded corners may offer better paste release. IPC-7525 may have alternate design recommendations.

PACKAGING INFORMATION

Orderable Device	Status (1)	Package Type	Package Drawing	Pins	Package Qty	Eco Plan (2)	Lead finish/ Ball material (6)	MSL Peak Temp (3)	Op Temp (°C)	Device Marking (4/5)	Samples
HDC2022DEPR	ACTIVE	WSON	DEP	6	3000	Green (RoHS & no Sb/Br)	NIPDAU	Level-1-260C-UNLIM	-40 to 125		Samples
HDC2022DEPT	ACTIVE	WSON	DEP	6	250	Green (RoHS & no Sb/Br)	NIPDAU	Level-1-260C-UNLIM	-40 to 125		Samples

(1) The marketing status values are defined as follows:
ACTIVE: Product device recommended for new designs.
LIFEBUY: TI has announced that the device will be discontinued, and a lifetime-buy period is in effect.
NRND: Not recommended for new designs. Device is in production to support existing customers, but TI does not recommend using this part in a new design.
PREVIEW: Device has been announced but is not in production. Samples may or may not be available.
OBSOLETE: TI has discontinued the production of the device.

(2) **RoHS:** TI defines "RoHS" to mean semiconductor products that are compliant with the current EU RoHS requirements for all 10 RoHS substances, including the requirement that RoHS substance do not exceed 0.1% by weight in homogeneous materials. Where designed to be soldered at high temperatures, "RoHS" products are suitable for use in specified lead-free processes. TI may reference these types of products as "Pb-Free".
RoHS Exempt: TI defines "RoHS Exempt" to mean products that contain lead but are compliant with EU RoHS pursuant to a specific EU RoHS exemption.
Green: TI defines "Green" to mean the content of Chlorine (Cl) and Bromine (Br) based flame retardants meet JS709B low halogen requirements of <=1000ppm threshold. Antimony trioxide based flame retardants must also meet the <=1000ppm threshold requirement.

(3) MSL, Peak Temp. - The Moisture Sensitivity Level rating according to the JEDEC industry standard classifications, and peak solder temperature.

(4) There may be additional marking, which relates to the logo, the lot trace code information, or the environmental category on the device.

(5) Multiple Device Markings will be inside parentheses. Only one Device Marking contained in parentheses and separated by a "~" will appear on a device. If a line is indented then it is a continuation of the previous line and the two combined represent the entire Device Marking for that device.

(6) Lead finish/Ball material - Orderable Devices may have multiple material finish options. Finish options are separated by a vertical ruled line. Lead finish/Ball material values may wrap to two lines if the finish value exceeds the maximum column width.

Important Information and Disclaimer: The information provided on this page represents TI's knowledge and belief as of the date that it is provided. TI bases its knowledge and belief on information provided by third parties, and makes no representation or warranty as to the accuracy of such information. Efforts are underway to better integrate information from third parties. TI has taken and continues to take reasonable steps to provide representative and accurate information but may not have conducted destructive testing or chemical analysis on incoming materials and chemicals. TI and TI suppliers consider certain information to be proprietary, and thus CAS numbers and other limited information may not be available for release.

In no event shall TI's liability arising out of such information exceed the total purchase price of the TI part(s) at issue in this document sold by TI to Customer on an annual basis.

TAPE AND REEL INFORMATION

REEL DIMENSIONS

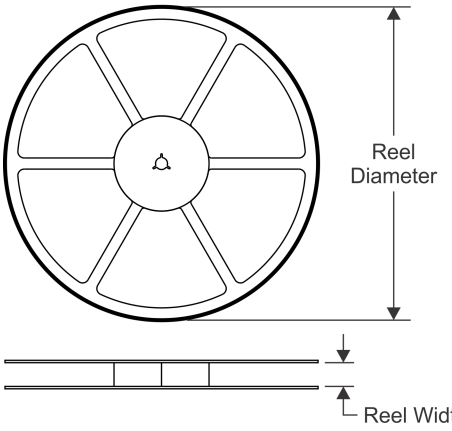

TAPE DIMENSIONS

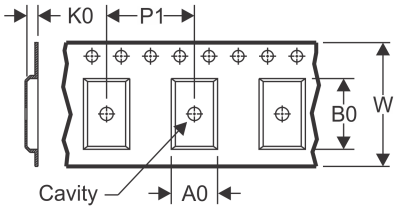

A0	Dimension designed to accommodate the component width
B0	Dimension designed to accommodate the component length
K0	Dimension designed to accommodate the component thickness
W	Overall width of the carrier tape
P1	Pitch between successive cavity centers

QUADRANT ASSIGNMENTS FOR PIN 1 ORIENTATION IN TAPE

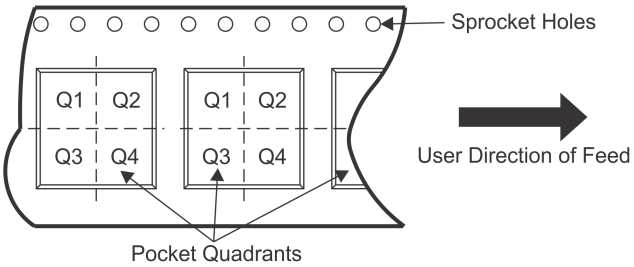

*All dimensions are nominal

Device	Package Type	Package Drawing	Pins	SPQ	Reel Diameter (mm)	Reel Width W1 (mm)	A0 (mm)	B0 (mm)	K0 (mm)	P1 (mm)	W (mm)	Pin1 Quadrant
HDC2022DEPR	WSON	DEP	6	3000	180.0	12.4	3.3	3.3	1.1	8.0	12.0	Q2
HDC2022DEPT	WSON	DEP	6	250	180.0	12.4	3.3	3.3	1.1	8.0	12.0	Q2

TAPE AND REEL BOX DIMENSIONS

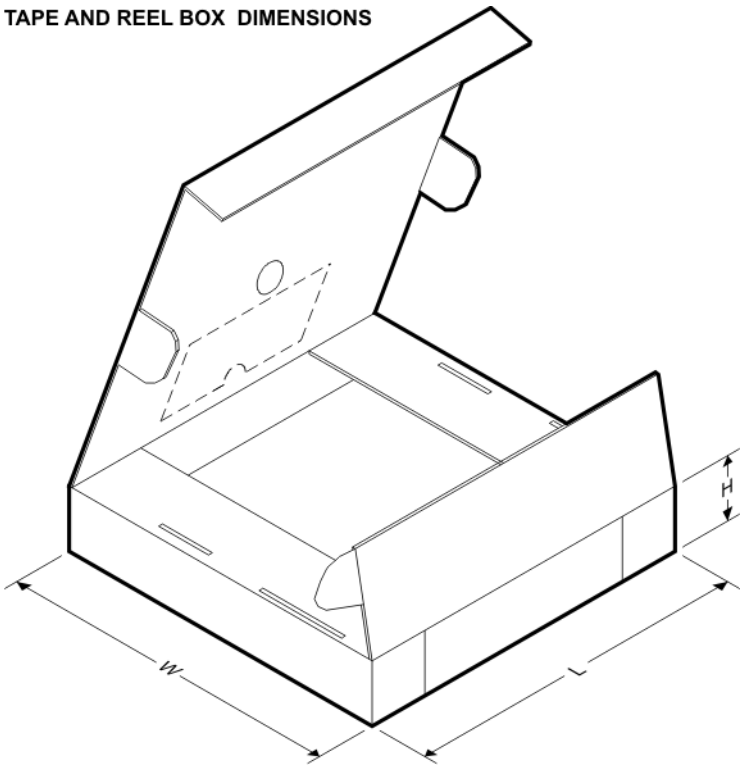

*All dimensions are nominal

Device	Package Type	Package Drawing	Pins	SPQ	Length (mm)	Width (mm)	Height (mm)
HDC2022DEPR	WSON	DEP	6	3000	193.0	193.0	70.0
HDC2022DEPT	WSON	DEP	6	250	193.0	193.0	70.0

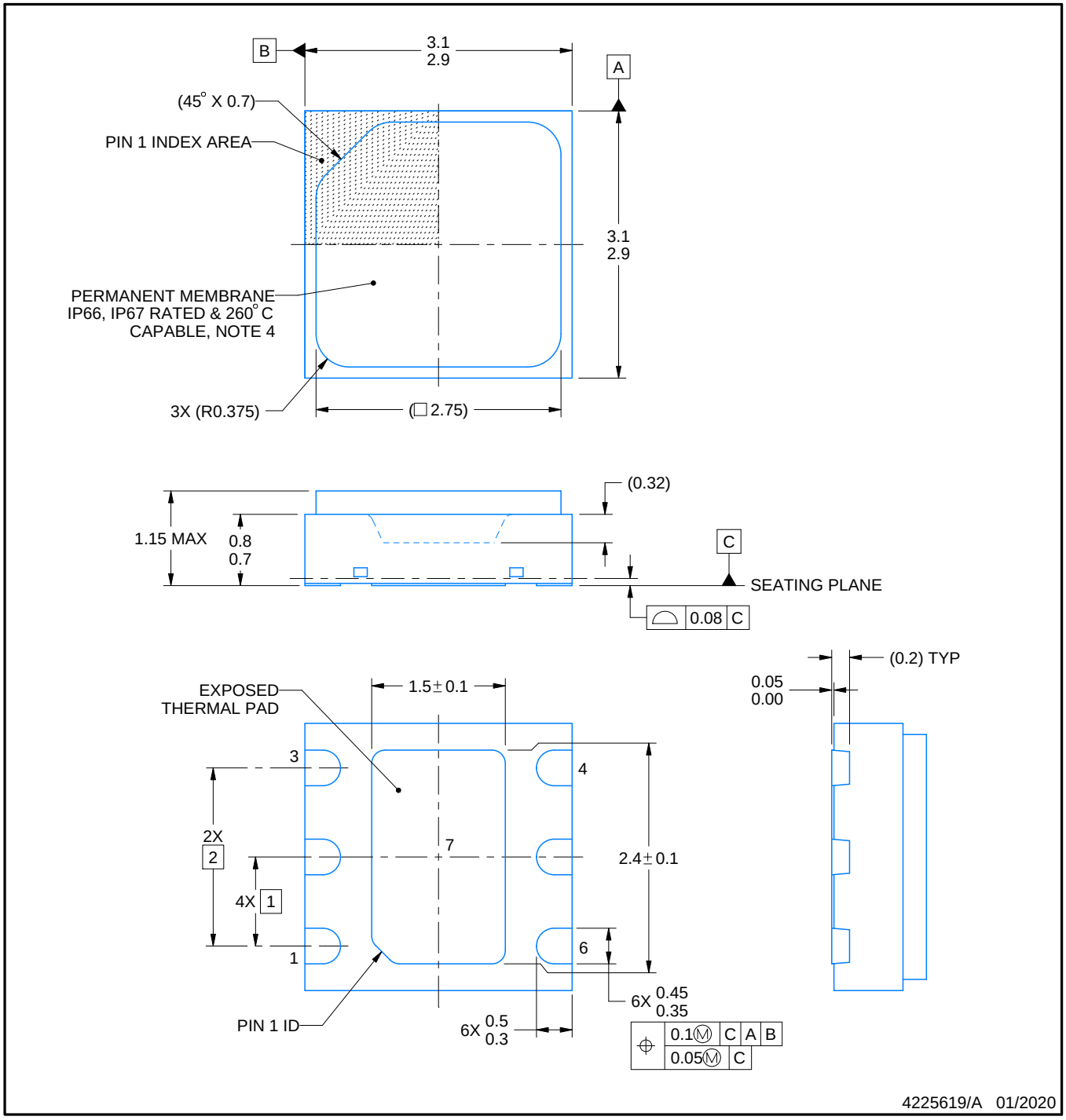

NOTES:

1. All linear dimensions are in millimeters. Any dimensions in parenthesis are for reference only. Dimensioning and tolerancing per ASME Y14.5M.
2. This drawing is subject to change without notice.
3. The package thermal pad must be soldered to the printed circuit board for thermal and mechanical performance.
4. IPXY Rating represents environmental ingress protection from both dust and high pressure water sprays. X=6 represents resistance to dust, Y=6 represents high pressure water spray resistance and Y=7 allows 1m water submersion per IEC60529 testing conditions.

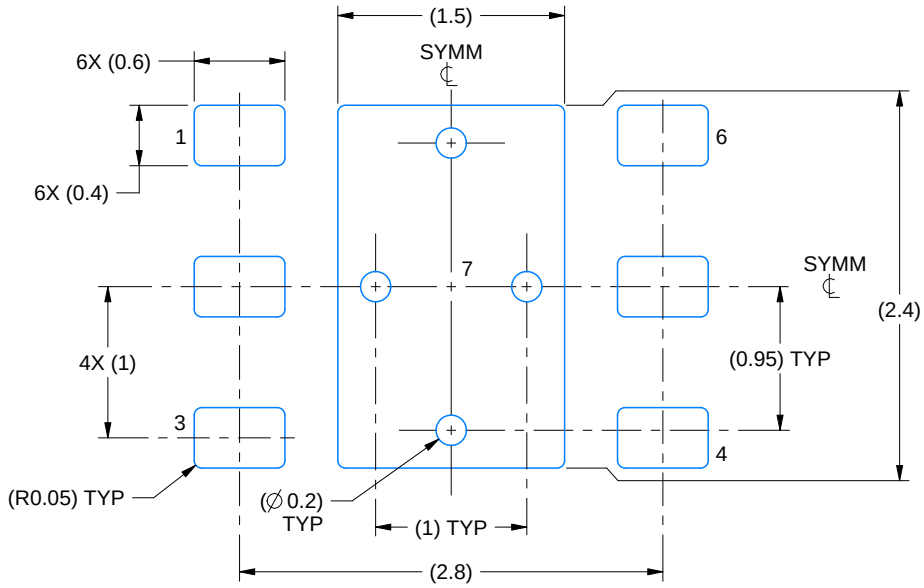

LAND PATTERN EXAMPLE
EXPOSED METAL SHOWN
SCALE:20X

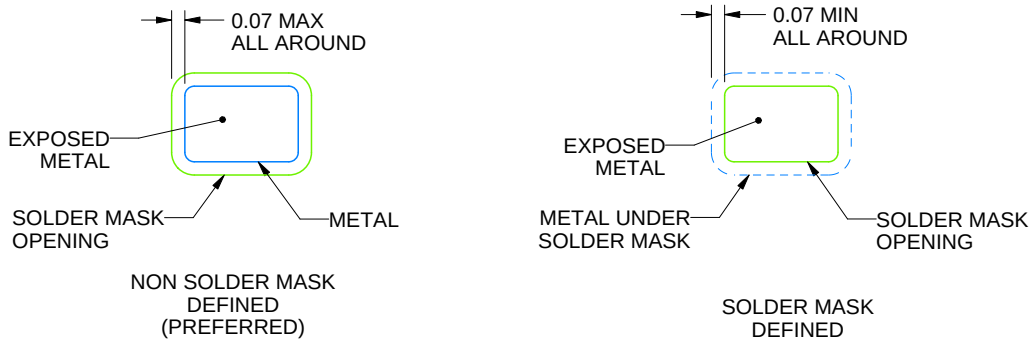

SOLDER MASK DETAILS

4225619/A 01/2020

NOTES: (continued)

5. This package is designed to be soldered to a thermal pad on the board. For more information, see Texas Instruments literature number SLUA271 (www.ti.com/lit/slua271).
6. Vias are optional depending on application, refer to device data sheet. If any vias are implemented, refer to their locations shown on this view. It is recommended that vias under paste be filled, plugged or tented.

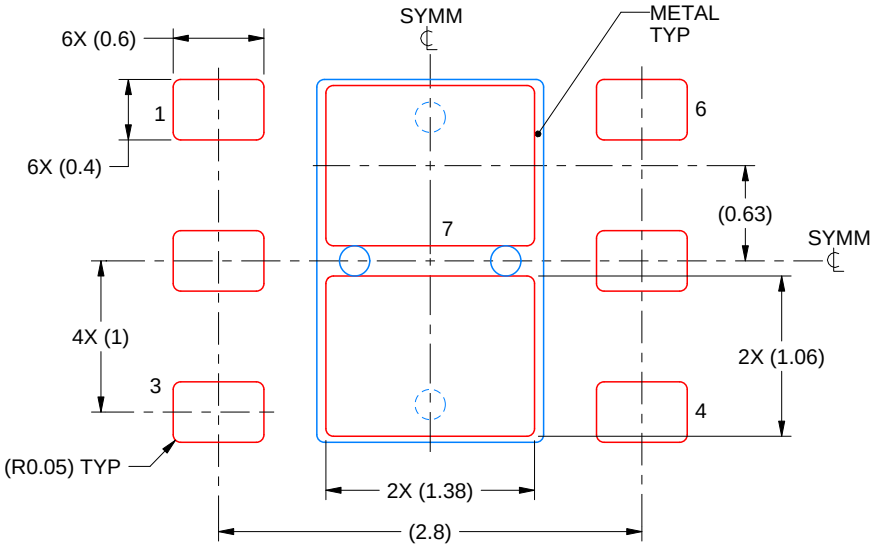

SOLDER PASTE EXAMPLE
BASED ON 0.125 mm THICK STENCIL

EXPOSED PAD 7:
81% PRINTED SOLDER COVERAGE BY AREA UNDER PACKAGE
SCALE:20X

4225619/A 01/2020

NOTES: (continued)

7. Laser cutting apertures with trapezoidal walls and rounded corners may offer better paste release. IPC-7525 may have alternate design recommendations.

IMPORTANT NOTICE AND DISCLAIMER

TI PROVIDES TECHNICAL AND RELIABILITY DATA (INCLUDING DATASHEETS), DESIGN RESOURCES (INCLUDING REFERENCE DESIGNS), APPLICATION OR OTHER DESIGN ADVICE, WEB TOOLS, SAFETY INFORMATION, AND OTHER RESOURCES “AS IS” AND WITH ALL FAULTS, AND DISCLAIMS ALL WARRANTIES, EXPRESS AND IMPLIED, INCLUDING WITHOUT LIMITATION ANY IMPLIED WARRANTIES OF MERCHANTABILITY, FITNESS FOR A PARTICULAR PURPOSE OR NON-INFRINGEMENT OF THIRD PARTY INTELLECTUAL PROPERTY RIGHTS.

These resources are intended for skilled developers designing with TI products. You are solely responsible for (1) selecting the appropriate TI products for your application, (2) designing, validating and testing your application, and (3) ensuring your application meets applicable standards, and any other safety, security, or other requirements. These resources are subject to change without notice. TI grants you permission to use these resources only for development of an application that uses the TI products described in the resource. Other reproduction and display of these resources is prohibited. No license is granted to any other TI intellectual property right or to any third party intellectual property right. TI disclaims responsibility for, and you will fully indemnify TI and its representatives against, any claims, damages, costs, losses, and liabilities arising out of your use of these resources.

TI’s products are provided subject to TI’s Terms of Sale (www.ti.com/legal/termsofsale.html) or other applicable terms available either on ti.com or provided in conjunction with such TI products. TI’s provision of these resources does not expand or otherwise alter TI’s applicable warranties or warranty disclaimers for TI products.

Mailing Address: Texas Instruments, Post Office Box 655303, Dallas, Texas 75265
Copyright © 2020, Texas Instruments Incorporated