Crystal Bridge to the Future

RoHS Compliant
Directive 2011/65/EU
Directive (EU) 2015/863

SPECIFICATION

Customer: Shanghai Tang Electronics CO.,LTD.

Receipt

Item:	CRYSTAL UNIT
Type:	NX3215SA
Nominal Frequency:	32.768kHz
Customer's Spec. No.:	30.089S-3272-BC57+A4
NDK Spec. No.:	STD-MUS-2

Revision Record

Rev.	Date	Items	Contents	Approved	Checked	Drawn
-----	2.Mar.2021	Issue	---	S.Kawanishi	H.Iwai	Y.Hasuike

1. Customer's Spec. No. : 30.089S-3272-BC57+A4

2. NDK Spec. No. : STD-MUS-2

3. Type : NX3215SA

4. Electrical Specifications

	Parameters	SYM	Electrical Spec.				Notes
			min	typ	max	Units	
4.1	Nominal Frequency	F_{nom}	32.768			kHz	---
4.2	Oscillation Mode	-	Fundamental			-	---
4.3	Load Capacitance	CL	12.5			pF	Network Analyzer(CNA-LF made in Transat corp.)
4.4	Frequency Tolerance	-	+/-20			ppm	at +25 +/-3°C ,Not include aging
4.5	Turning Point	-	+25 +/-5			°C	---
4.6	Temperature coefficient	-	-	-	-0.04	ppm/ $°C^2$	---
4.7	Operating Temperature range	-	-40	~	+125	°C	---
4.8	Aging	-	+/-3			ppm	1st year (at +25°C)
4.9	Drive level	DL	-	0.1	0.5	uW	---
4.10	Equivalent Resistance	R_r	-	-	80	kΩ	Network Analyzer(CNA-LF made in Transat corp.) / Series
4.11	Shunt Capacitance	C_0	0.5	1.0	1.5	pF	Network Analyzer(CNA-LF made in Transat corp.) / Series
4.12	Insulation Resistance	-	500	-	-	MΩ	Terminal to terminal insulation resistance must be 500MΩ (Min.) when DC100V ±15V is applied.
4.13	Storage Temperature range	-	-40	~	+125	°C	---
4.14	Motional Capacitance	C_1	2.0	4.0	6.0	fF	Network Analyzer(CNA-LF made in Transat corp.) / Series

5. Examination results document

Since a performance is guaranteed, an examination results document does not submit.

6. Application drawing

6.1 Dimension drawing : EXD14B-00462
6.2 Taping and reel figure : EXK17B-00303
6.3 Holder marking : EXH11B-00422
6.4 Reliability assurance Item : EXS30B-00722

7.Notes on use

7-1 Even if the appearance color etc. of the product differs by purchasing the component parts by more than two companies, there is no influence on the characteristics and reliability.

7-2 Since the crystal unit is a passive component, it is important to have appropriate circuit conditions. Please be sure to check the circuit conditions before using the crystal units, and ensure the necessary circuit margin, and confirm that the desired frequency is output. Moreover, please check the circuit conditions when using an existing crystal unit for another model or board.

If the circuit conditions are not appropriate, there is a risk of oscillation stop or frequency deviation.

7-3 IN THE CASE OF THE FOLLOWING ITEMS, WE ARE NOT RESPONSIBLE FOR WARRANTY / COMPENSATION.

(1) WHEN PRODUCTS OF THIS SPECIFICATION ARE USED FOR EQUIPMENT RELATED TO HUMAN LIFE OR PROPERTY, IT IS THE RESPONSIBILITY OF THE CUSTOMER TO CONFIRM THE INFLUENCE ON THIS PRODUCT AND EQUIPMENT TO BE USED BEFOREHAND, CONDUCT NECESSARY SAFETY DESIGN (INCLUDING REDUNDANT DESIGN, MALFUNCTION PREVENTION DESIGN, etc.), AND PLEASE USE IT AFTER SECURING SUFFICIENT SAFETY OF EQUIPMENT.

1. SAFETY-RELATED EQUIPMENT SUCH AS AUTOMOBILES, TRAINS, SHIPS, etc., OR EQUIPMENT DIRECTLY INVOLVED IN OPERATION
2. AIRCRAFT EQUIPMENT
3. SPACE EQUIPMENT
4. MEDICAL EQUIPMENT
5. MILITARY EQUIPMENT
6. DISASTER PREVENTION / CRIME PREVENTION EQUIPMENT
7. TRAFFIC LIGHT
8. OTHER EQUIPMENT REQUIRING THE SAME PERFORMANCE AS THE ABOVE-MENTIONED EQUIPMENT

(2) IN CASES WHERE IT IS NOT INDICATED IN THE REQUESTED STANDARD AND IS USED UNDER CONDITIONS OF USE (INCLUDING CIRCUIT MARGIN etc.) THAT CAN NOT BE PREDICTED AT THE PRODUCTION STAGE.

(3) WHEN USING ULTRASONIC WELDING MACHINE. (THERE IS A POSSIBILITY THAT THE CHARACTERISTIC DEGRADATION IS CAUSED BY THE RESONANCE PHENOMENON OF THE PIEZOELECTORIC MATERIAL.

(EXAMPLE; CRYSTAL PIECE))

WE WILL NOT TAKE ANY RESPONSIBILITY FOR THE INFLUENCE OF THE CUSTOMERS' PROCESS.

SO, PLEASE SUFFICIENTLY EVALUATE AT A SAMPLE STEP WHEN YOU USE ULTRASONIC WELDING MACHINE.

(4) USING RESIN MOLD MAY AFFECT THE PRODUCT CHARACTERISTIC.

PLEASE MAKE SURE TO TELL OUR SALES CONTACT WHEN YOU USE RESIN MOLD. WE WILL PERFORM INDIVIDUAL CORRESPONDENCE ABOUT A DELIVERY SPECIFICATION AND AN EVALUATION METHOD.

IN ADDITION, IF YOU USE RESIN MOLD WITHOUT CONTACTING US, AND CAUSES DAMAGES AGAINST A CUSTOMER OR A THIRD PARTY, WE WILL NOT BE LIABLE FOR THE DAMAGES AND OTHER RESPONSIBILITIES BECAUSE WE CONSIDER IT IS UNDER SELF-RESPONSIBILITY USING RESIN MOLD.

WE WILL NOT TAKE ANY RESPONSIBILITY FOR THE INFLUENCE OF THE CUSTOMERS' PROCESS. PLEASE SUFFICIENTLY EVALUATE AT A SAMPLE STEP WHEN YOU USE RESIN MOLD.

(5) WHEN PERFORMING IMPROPER HANDLING THAT EXCEEDS THE GUARANTEED RANGE.

8.Notes on storage

8-1 When storing the product in high temperature and high humidity condition for a long time, product characteristics (solderability etc.) and packaging condition may be deteriorated. Please store product at temperature + 5 °C ~ + 35 °C, humidity 85% RH or less. The product is an electronic component, so please do not storage and use, under a dewing state.

8-2 The product storage deadline is 12 months after delivery in unopened state. Please use within storage deadline. If you exceed storage deadline, please check the product characteristics etc, please use.

9.Other Requests

9-1 Please use this specification only for confirmation of the specification of this product.

9-2 If there is a change request, please contact within three weeks from issue date. If there is no communication, we will deliver the product under the contents of this specification. In addition, if the product delivery date is within 3 weeks and there is a change request, we will consult the processing separately.

9-3 NOTES THAT ARE DESCRIBED IN THIS DOCUMENT, IF YOU DID NOT COMPLY WITH THE PROHIBITIONS, AND OTHER PLEASE, INCLUDING THE FAILURE CORRESPONDENCE OR COMPENSATION OR DAMAGES, WE CAN NOT ASSUME THE RESPONSIBILITY, PLEASE UNDERSTAND.

10. Prohibited items

Be sure to use the product under the following conditions. Otherwise, the characteristics deterioration or destruction of the product may result.

(1) Reflow soldering heat resistance

Peak temperature: 265°C, 10 sec
Heating: 230°C or higher, 30 sec
Preheating: 150°C to 180°C, 120 sec
Reflow passage times: twice

(2) Manual soldering heat resistance

Pressing a soldering iron of 400°C on the terminal electrode for four seconds (twice).

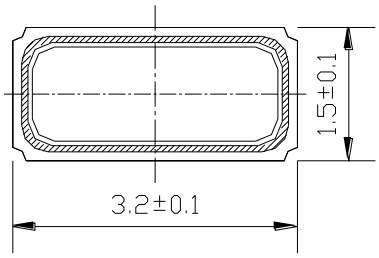

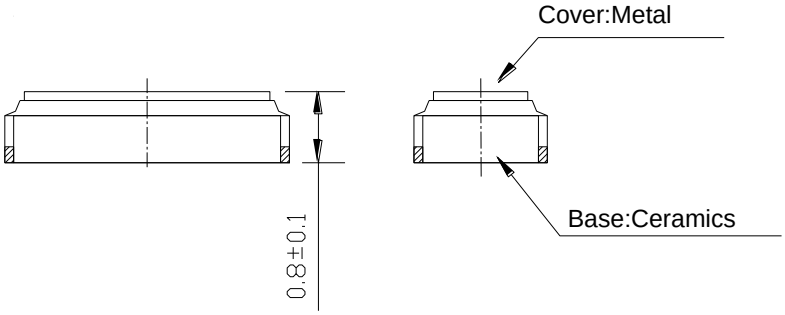

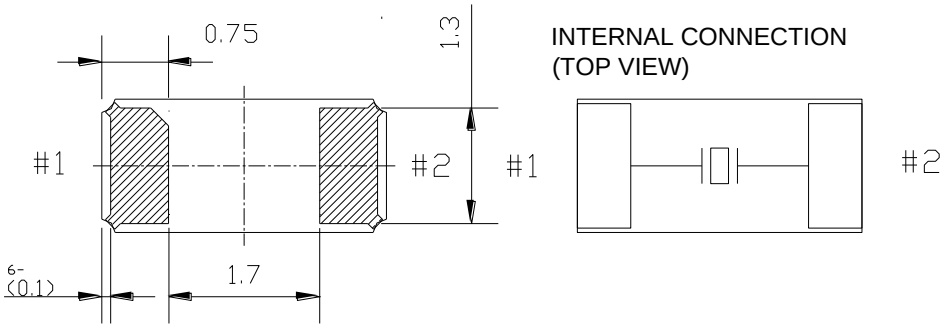

Recommended soldering pattern

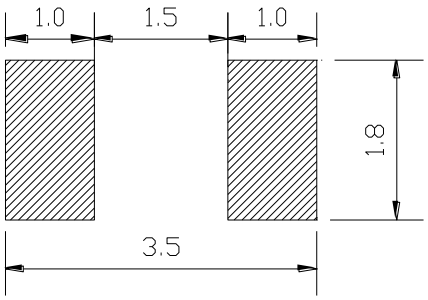

	Date of Revise	Charge	Approved	Reason
C	15.Jun.2017	Hasuike	Sunaba	Changed Title

	Date	Name	Third Angle Projection	Tolerance	Scale
Drawn	30.Aug.2009	Miyahara	Dimension:mm	±0.2	10 / 1
Designed	30.Aug.2009	Miyahara	Title	Drawing No.	Rev.
Checked	---	---	**3215 TYPE External Dimension**	**EXD14B-00462**	C
Approved	30.Aug.2009	K. Ueki			

NIHON DEMPA KOGYO CO., LTD.

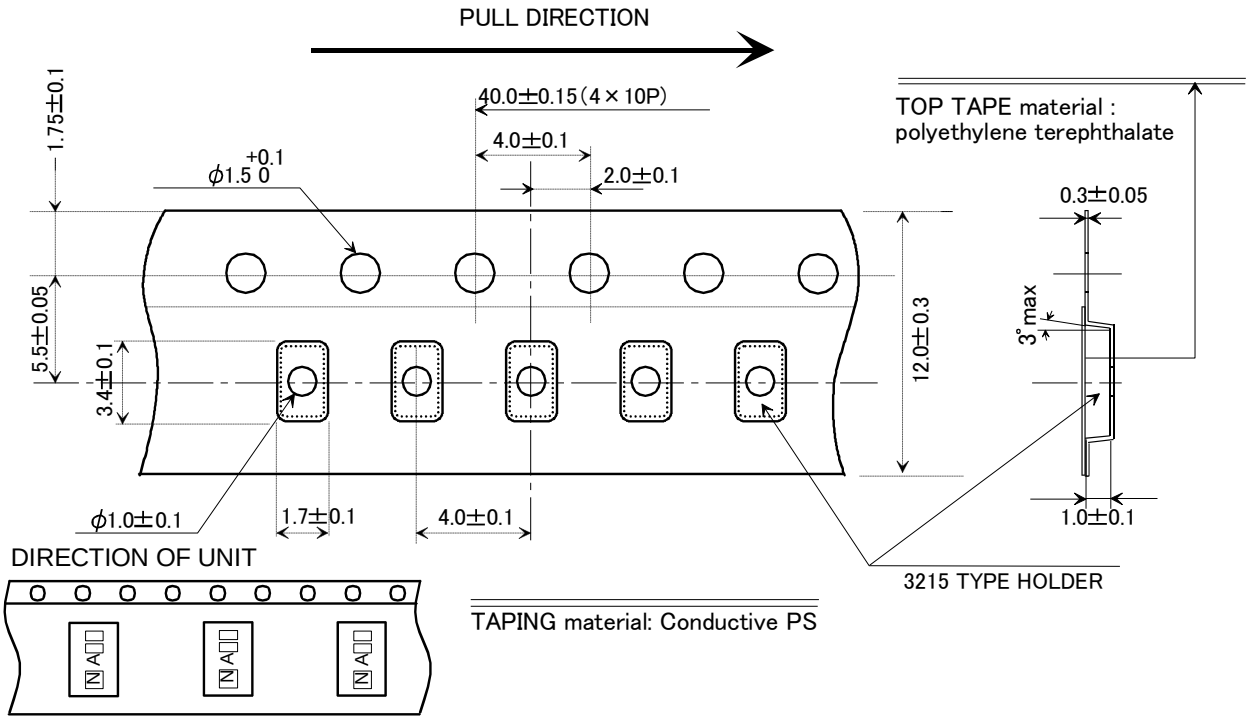

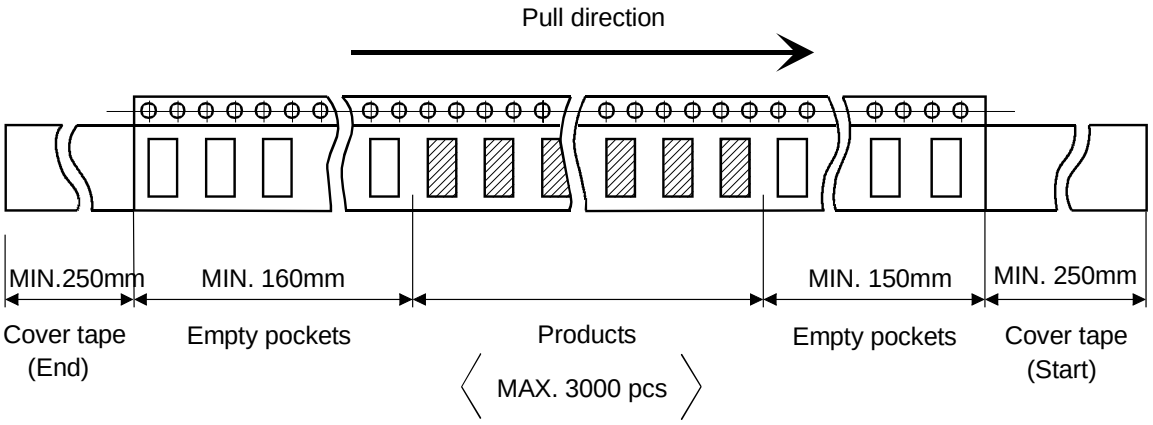

	Date of Revise	Charge	Approved	Reason
B	24.Apr.2013	Sato	Matsudo	Added English

	Date	Name	Third Angle Projection	Tolerance	Scale
Drawn	9.Jul.2009	N.Yamamoto	mm		/
Designed	9.Jul.2009	N.Yamamoto	Title	Drawing No.	Rev.
Checked	---	---	3215 TYPE Taping and Reel Spec.	EXK17B-00303 1/2	B
Approved	9.Jul.2009	K.Ueki			

NIHON DEMPA KOGYO CO., LTD.

Form M-1

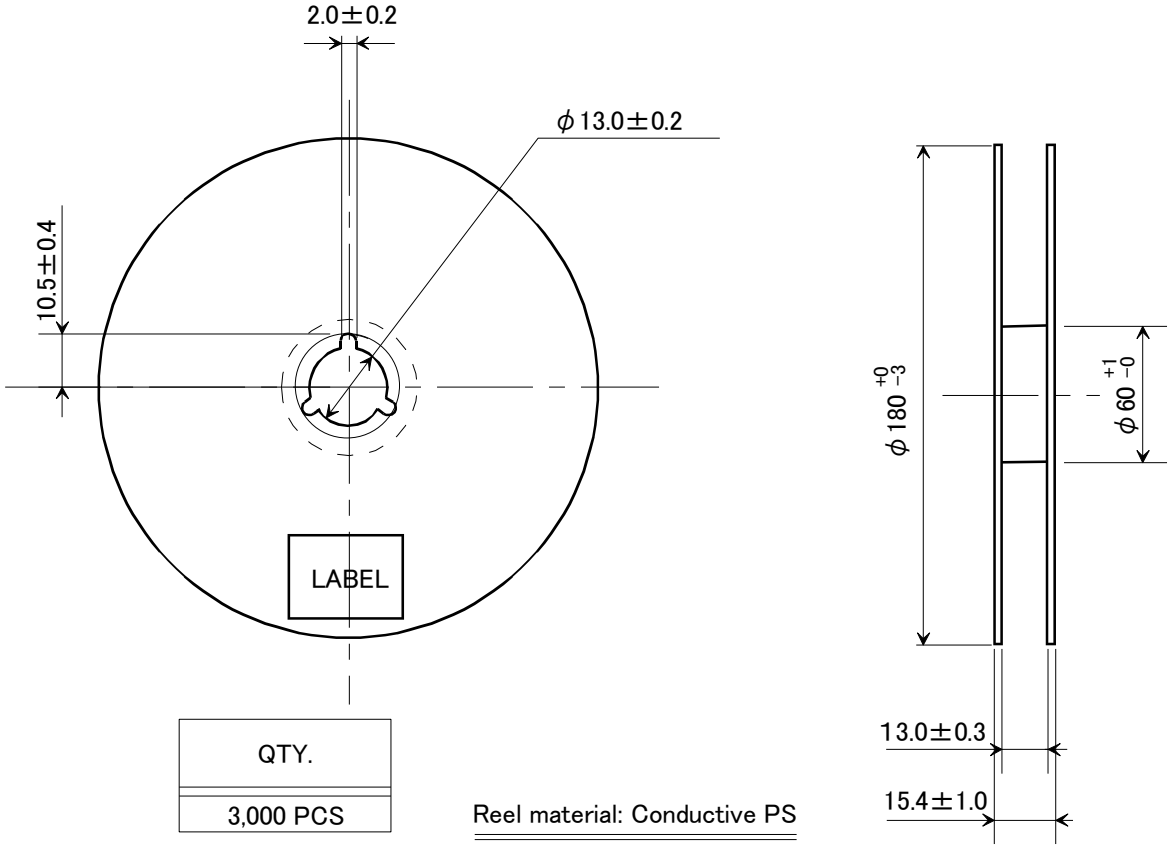

QTY.
3,000 PCS

Reel material: Conductive PS

EIAJ standard reel

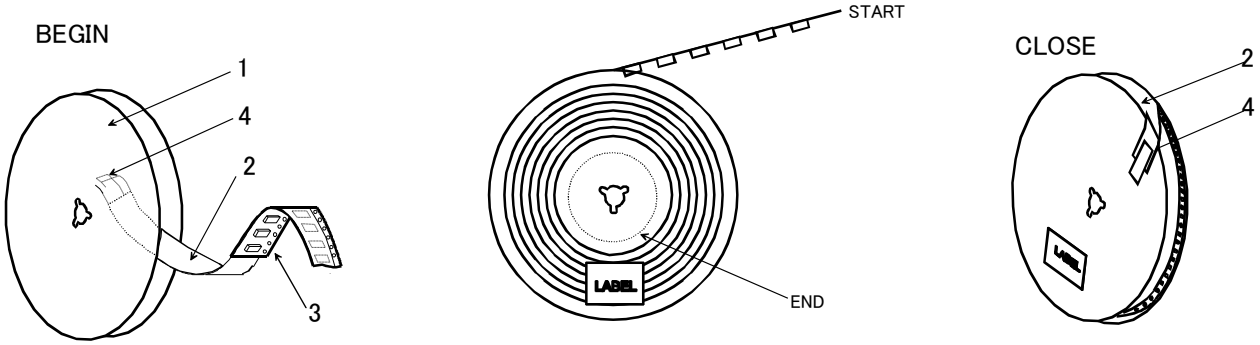

	Date of Revise	Charge	Approved	Reason
B	24.Apr.2013	Sato	Matsudo	Added English

	Date	Name	Third Angle Projection	Tolerance	Scale
Drawn	9.Jul.2009	N.Yamamoto	mm		/
Designed	9.Jul.2009	N.Yamamoto	Title	Drawing No.	Rev.
Checked	---	---	3215 TYPE Taping and Reel Spec.	EXK17B-00303 2/2	B
Approved	9.Jul.2009	K.Ueki			

NIHON DEMPA KOGYO CO., LTD.

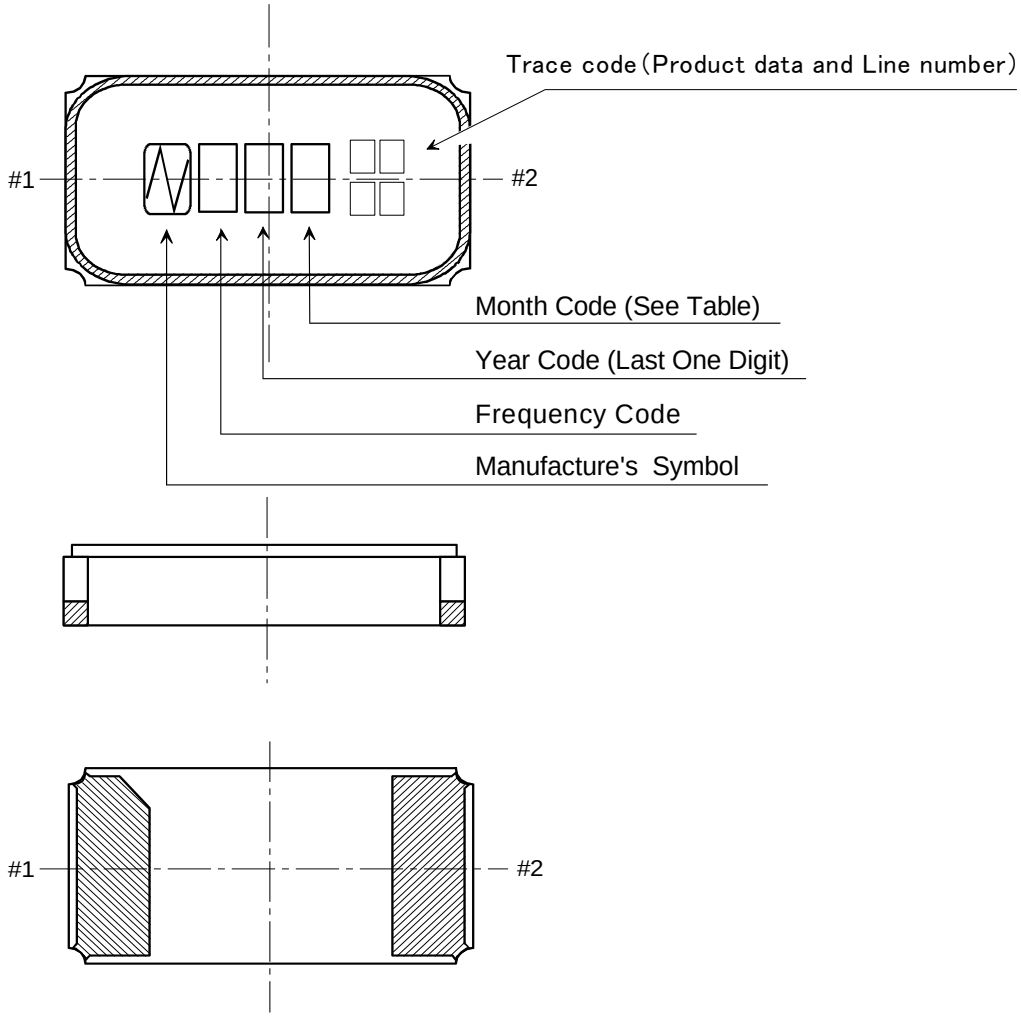

NOTE

1. Month Code

Month	1 Jan.	2 Feb.	3 Mar.	4 Apr.	5 May	6 June	7 July	8 Aug.	9 Sep.	10 Oct.	11 Nov.	12 Dec.
Month Code	1	2	3	4	5	6	7	8	9	X	Y	Z

2. Frequency Code

A : 32.768kHz

3. Marking Method

Marking Method is Laser Triming.

	Date of Revise	Charge	Approved	Reason

	Date	Name	Third Angle Projection	Tolerance	Scale
Drawn	28.OCt.2009	Miyahara	Dimension:mm		/
Designed	28.OCt.2009	Miyahara	Title	Drawing No.	Rev.
Checked	--	--	NX3215SA Marking Drawing	EXH11B-00422	
Approved	28.OCt.2009	Ueki			

NIHON DEMPA KOGYO CO., LTD.

Form M-1

Reliability assurance item

(page: 1/1)

No.	Test Item	Test Methods	Specification Code
1	Drop	Devices are dropped from the height 1.2m onto iron plate. Execution 3 times random drops.	A
2	Shock	Acceleration: 49000 m/s^2 Duration: 0.15 ms Half-Sine pulse 1 Shocks in 6 mutually perpendicular planes, Total 6 shocks	A
3	Vibration	Frequency range: 10 to 2000 Hz Amplitude or Acceleration: 1.52 mm or 196 m/s^2 Sweep time: 20 min Test time: 4 h×3	A
4	Resistance to heat	Leave at +125±2 °C for 1000 h	A
5	Resistance to cold	Leave at -40±2 °C for 1000 h	A
6	Thermal shock	Device are left into the following temperature cycle as shown in (Figure1) for 1000 consecutive cycle. 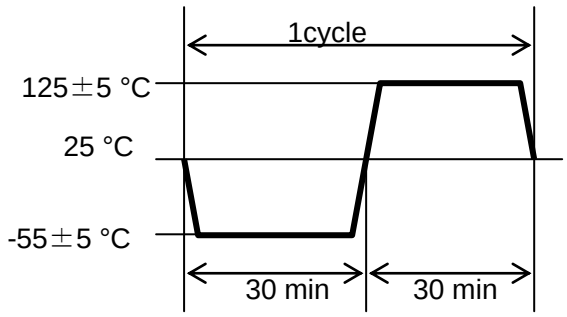 (Figure1)	A
7	Humidity	Device are left in temperature at +85±2 °C with relative humidity of 80~85 % for 1000 h	A
8	Shear Stress	10N press the side of product for 10±1s. Ref: 60068-2-21 (Mechanical strength test for SMD)	B
9	Resistance to soldering heat	Pre-heat temperature : 150 °C Pre-heat time : 60 ~ 120 s Test temperature : 260 ± 5 °C Test time : 10 ± 1 s	A
10	Solderability	Pre-heat temperature : 150 °C Pre-heat Time : 60 ~ 120 s Peak temperature : 240 ± 5 °C 215 °C Over time : 10 ~ 30 s	C

Specification code	Specification
A	df/f<=±20ppm, CI<=100kΩ
B	No peeling-off soldered part.
C	The leads shall acquire a new solder coat cover at 95 % of immersed area.