Pb Free Plating Product

WVM50N06

50A,60V Heatsink Planar N-Channel Power MOSFETs

Features

- 50A, 60V, $R_{DS(on)}$ = 0.022Ω @V_{GS} = 10 V
- Low gate charge (typical 31 nC)
- Low Crss (typical 65 pF)
- Fast switching
- 100% avalanche tested
- Improved dv/dt capability
- 175°C maximum junction temperature rating

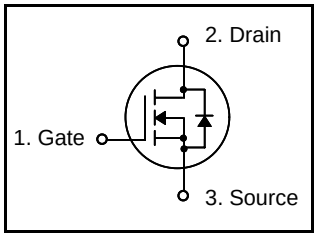

BV_{DSS} = 60V

$R_{DS(ON)}$ = 0.022 ohm

I_D = 50A

General Description

This N-channel enhancement mode field-effect power transistor using THINKI Semiconductor advanced planar stripe, DMOS technology intended for off-line switch mode power supply.
Also, especially designed to minimize rds(on) and high rugged avalanche characteristics. The TO-220W-SQ pkg is well suited for adaptor power units,amplifiers,inverters and SMPS application.

TO-220W-SQ

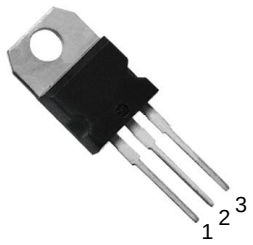

Absolute Maximum Ratings

T_C = 25°C unless otherwise noted

Symbol	Parameter		WVM50N06	Units
V_{DSS}	Drain-Source Voltage		60	V
I_D	Drain Current - Continuous (T_C = 25°C)		50	A
	- Continuous (T_C = 100°C)		35.4	A
I_{DM}	Drain Current - Pulsed	(Note 1)	200	A
V_{GSS}	Gate-Source Voltage		± 25	V
E_{AS}	Single Pulsed Avalanche Energy	(Note 2)	490	mJ
I_{AR}	Avalanche Current	(Note 1)	50	A
E_{AR}	Repetitive Avalanche Energy	(Note 1)	12	mJ
dv/dt	Peak Diode Recovery dv/dt	(Note 3)	7.0	V/ns
P_D	Power Dissipation (T_C = 25°C)		120	W
	- Derate above 25°C		0.8	W/°C
T_J, T_{STG}	Operating and Storage Temperature Range		-55 to +175	°C
T_L	Maximum lead temperature for soldering purposes, 1/8" from case for 5 seconds		300	°C

Thermal Characteristics

Symbol	Parameter	Typ	Max	Units
$R_{\theta JC}$	Thermal Resistance, Junction-to-Case	--	1.24	°C/W
$R_{\theta CS}$	Thermal Resistance, Case-to-Sink	0.5	--	°C/W
$R_{\theta JA}$	Thermal Resistance, Junction-to-Ambient	--	62.5	°C/W

© 1995 Thinki Semiconductor Co., Ltd.

Download from alldatasheet.com

Electrical Characteristics

T_C = 25°C unless otherwise noted

Symbol	Parameter	Test Conditions	Min	Typ	Max	Units
Off Characteristics						
BV_{DSS}	Drain-Source Breakdown Voltage	V_{GS} = 0 V, I_D = 250 μA	60	--	--	V
ΔBV_{DSS} / ΔT_J	Breakdown Voltage Temperature Coefficient	I_D = 250 μA, Referenced to 25°C	--	0.06	--	V/°C
I_{DSS}	Zero Gate Voltage Drain Current	V_{DS} = 60 V, V_{GS} = 0 V	--	--	1	μA
		V_{DS} = 48 V, T_C = 150°C	--	--	10	μA
I_{GSSF}	Gate-Body Leakage Current, Forward	V_{GS} = 25 V, V_{DS} = 0 V	--	--	100	nA
I_{GSSR}	Gate-Body Leakage Current, Reverse	V_{GS} = -25 V, V_{DS} = 0 V	--	--	-100	nA
On Characteristics						
$V_{GS(th)}$	Gate Threshold Voltage	V_{DS} = V_{GS}, I_D = 250 μA	2.0	--	4.0	V
$R_{DS(on)}$	Static Drain-Source On-Resistance	V_{GS} = 10 V, I_D = 25 A	--	0.018	0.022	Ω
g_{FS}	Forward Transconductance	V_{DS} = 25 V, I_D = 25 A (Note 4)	--	22	--	S
Dynamic Characteristics						
C_{iss}	Input Capacitance	V_{DS} = 25 V, V_{GS} = 0 V, f = 1.0 MHz	--	1180	1540	pF
C_{oss}	Output Capacitance		--	440	580	pF
C_{rss}	Reverse Transfer Capacitance		--	65	90	pF
Switching Characteristics						
$t_{d(on)}$	Turn-On Delay Time	V_{DD} = 30 V, I_D = 25 A, R_G = 25 Ω (Note 4, 5)	--	15	40	ns
t_r	Turn-On Rise Time		--	105	220	ns
$t_{d(off)}$	Turn-Off Delay Time		--	60	130	ns
t_f	Turn-Off Fall Time		--	65	140	ns
Q_g	Total Gate Charge	V_{DS} = 48 V, I_D = 50 A, V_{GS} = 10 V (Note 4, 5)	--	31	41	nC
Q_{gs}	Gate-Source Charge		--	8	--	nC
Q_{gd}	Gate-Drain Charge		--	13	--	nC
Drain-Source Diode Characteristics and Maximum Ratings						
I_S	Maximum Continuous Drain-Source Diode Forward Current		--	--	50	A
I_{SM}	Maximum Pulsed Drain-Source Diode Forward Current		--	--	200	A
V_{SD}	Drain-Source Diode Forward Voltage	V_{GS} = 0 V, I_S = 50 A	--	--	1.5	V
t_{rr}	Reverse Recovery Time	V_{GS} = 0 V, I_S = 50 A, dI_F / dt = 100 A/μs (Note 4)	--	52	--	ns
Q_{rr}	Reverse Recovery Charge		--	75	--	nC

Notes:
1. Repetitive Rating : Pulse width limited by maximum junction temperature
2. L = 230μH, I_{AS} = 50A, V_{DD} = 25V, R_G = 25 Ω, Starting T_J = 25°C
3. I_{SD} ≤ 50A, di/dt ≤ 300A/μs, V_{DD} ≤ BV_{DSS}, Starting T_J = 25°C
4. Pulse Test : Pulse width ≤ 300μs, Duty cycle ≤ 2%
5. Essentially independent of operating temperature

© 1995 Thinki Semiconductor Co., Ltd. http://www.thinkisemi.com.tw/
Download from alldatasheet.com

Typical Characteristics

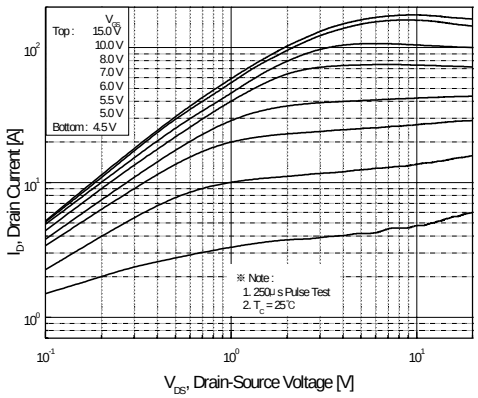

Figure 1. On-Region Characteristics

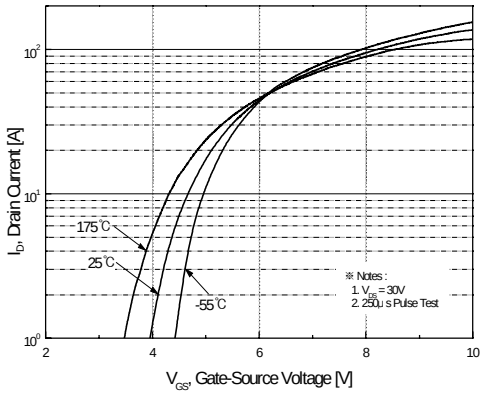

Figure 2. Transfer Characteristics

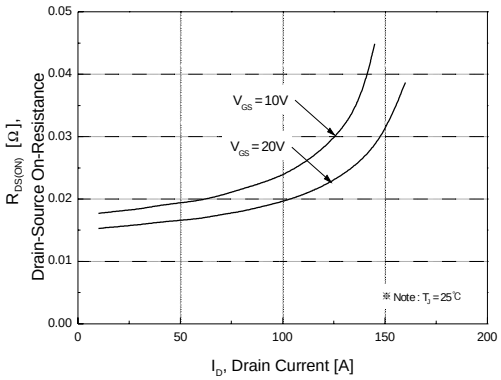

Figure 3. On-Resistance Variation vs. Drain Current and Gate Voltage

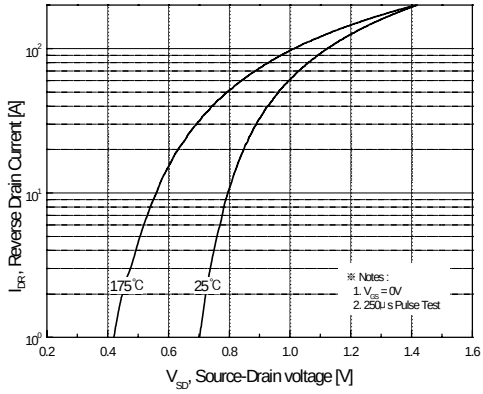

Figure 4. Body Diode Forward Voltage Variation vs. Source Current and Temperature

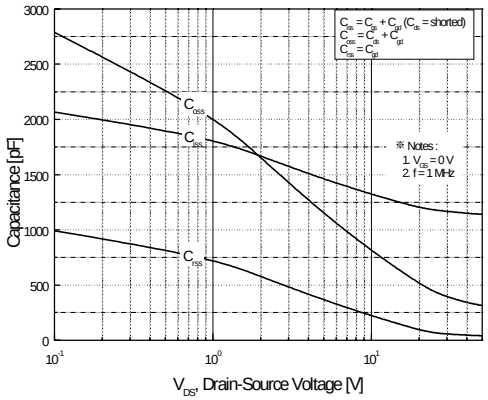

Figure 5. Capacitance Characteristics

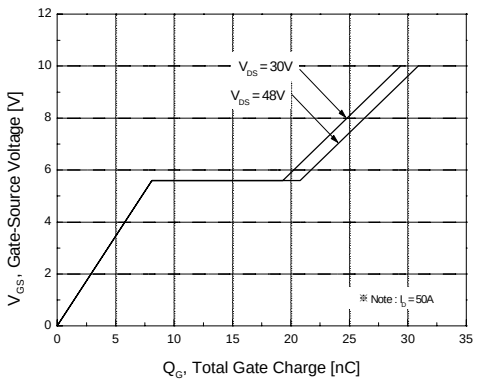

Figure 6. Gate Charge Characteristics

© 1995 Thinki Semiconductor Co., Ltd.

Download from alldatasheet.com

Typical Characteristics (Continued)

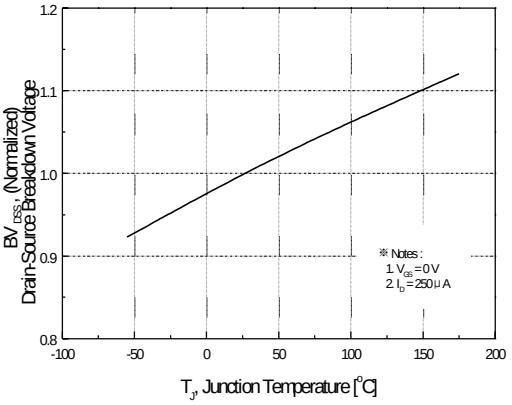

Figure 7. Breakdown Voltage Variation vs. Temperature

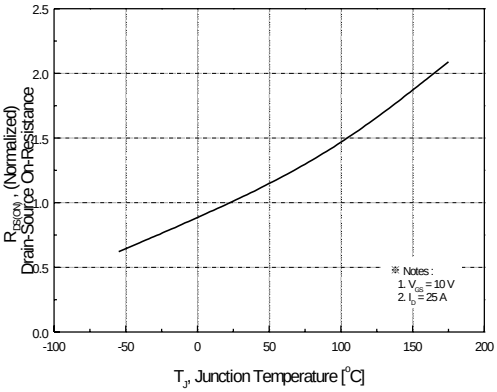

Figure 8. On-Resistance Variation vs. Temperature

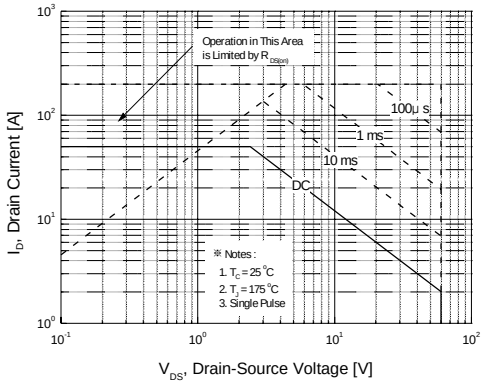

Figure 9. Maximum Safe Operating Area

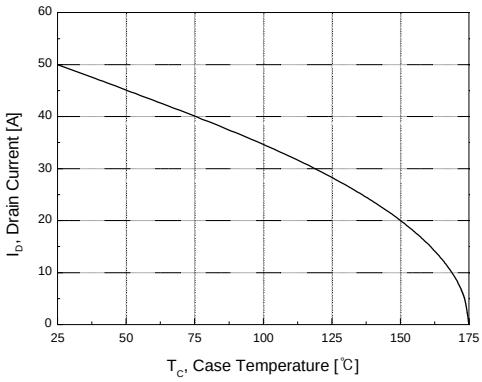

Figure 10. Maximum Drain Current vs. Case Temperature

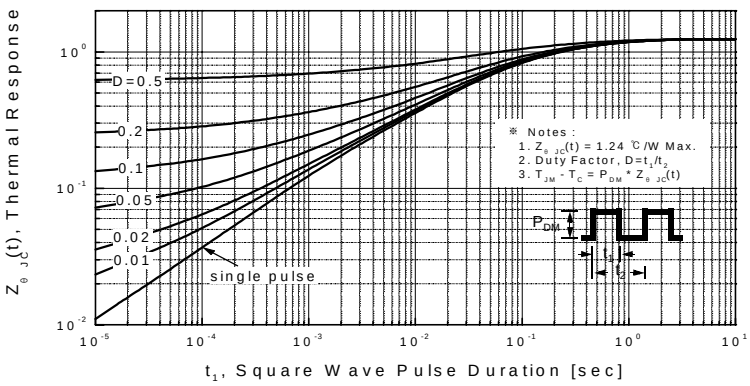

Figure 11. Transient Thermal Response Curve

© 1995 Thinki Semiconductor Co., Ltd. http://www.thinkisemi.com.tw/
Download from alldatasheet.com

Gate Charge Test Circuit & Waveform

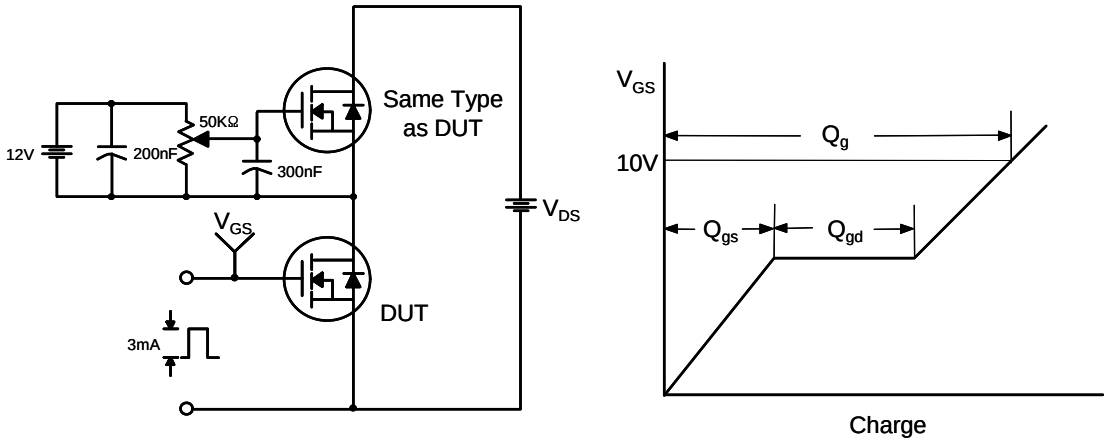

Resistive Switching Test Circuit & Waveforms

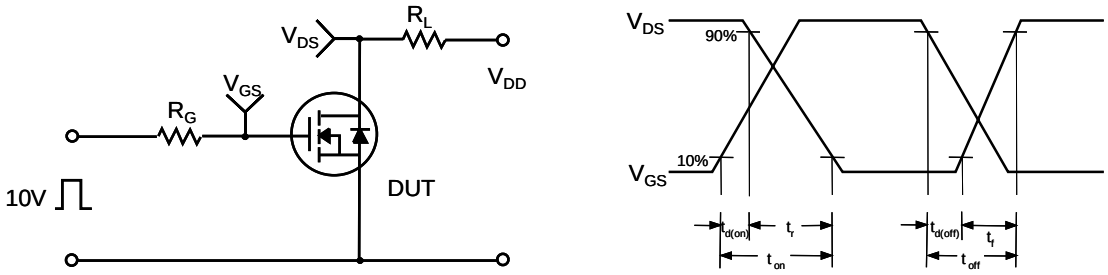

Unclamped Inductive Switching Test Circuit & Waveforms

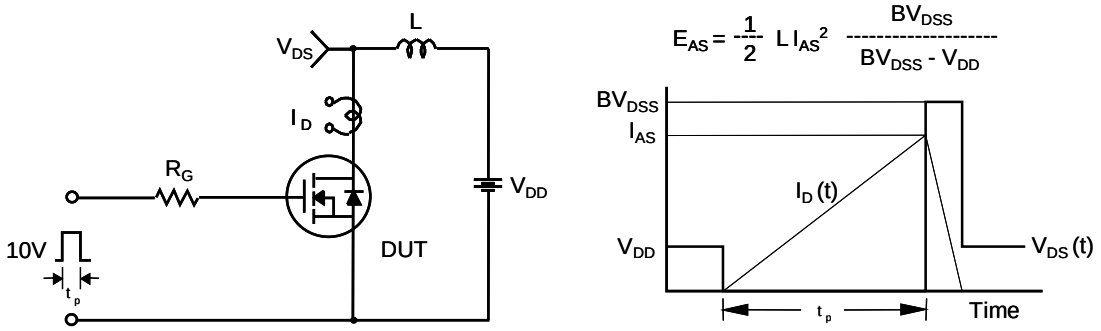

© 1995 Thinki Semiconductor Co., Ltd. http://www.thinkisemi.com.tw/
Download from alldatasheet.com

Peak Diode Recovery dv/dt Test Circuit & Waveforms

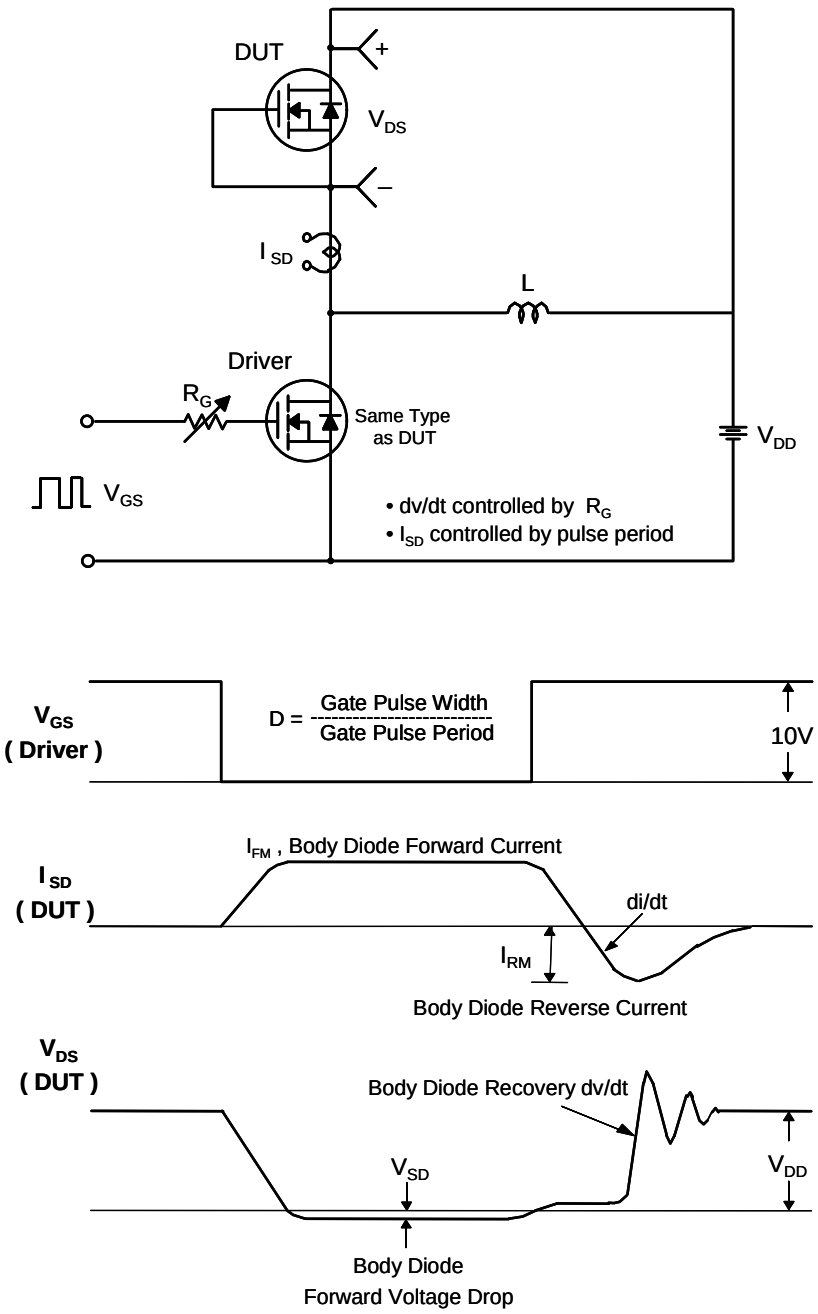

© 1995 Thinki Semiconductor Co., Ltd. http://www.thinkisemi.com.tw/
Download from alldatasheet.com

TO-220W-SQ MECHANICAL DATA

DIM.	mm			inch		
	MIN.	TYP.	MAX.	MIN.	TYP.	MAX.
A	4.40		4.60	0.173		0.181
C	1.23		1.32	0.048		0.051
D	2.40		2.72	0.094		0.107
D1		1.27			0.050	
E	0.49		0.70	0.019		0.027
F	0.61		0.88	0.024		0.034
F1	1.14		1.70	0.044		0.067
F2	1.14		1.70	0.044		0.067
G	4.95		5.15	0.194		0.203
G1	2.4		2.7	0.094		0.106
H2	10.0		10.40	0.393		0.409
L2		16.4			0.645	
L4	13.0		14.0	0.511		0.551
L5	2.65		2.95	0.104		0.116
L6	15.25		15.75	0.600		0.620
L7	6.2		6.6	0.244		0.260
L9	3.5		3.93	0.137		0.154
DIA.	3.75		3.85	0.147		0.151

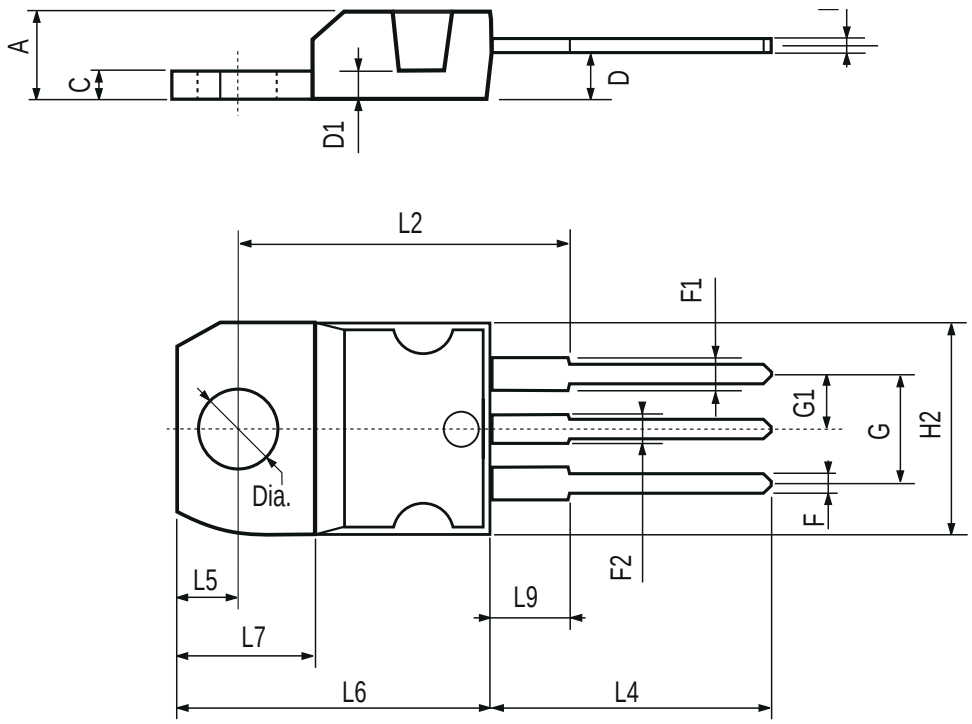

© 1995 Thinki Semiconductor Co., Ltd.

Download from alldatasheet.com