PASTERNACK
an INFINITE brand

WR-15 Waveguide Conical Gain Horn Antenna Operating from 58 GHz to 68 GHz with a Nominal 10 dBi Gain with UG-385/U Round Cover Flange

Gain Horns Technical Data Sheet PEWAN1037

Features

- Circular Waveguide Interface
- 58 GHz to 68 GHz
- 10 dBi Nominal Gain
- UG-385/U Round Cover Flange

Applications

- Antenna Measurements
- Wireless Communication
- Laboratory Use
- Microwave Radio Systems

Description

Waveguide conical gain horn antennas are used in a wide variety of applications due to their high power handling capability, low loss, high directivity, and near constant electrical performance across a broad bandwidth. Pasternack's PEWAN1037 WR-15 waveguide conical gain horn antenna operating from 58 GHz to 68 GHz with a nominal 10 dBi gain is part of our full line of RF components available for same-day shipping. This Pasternack circular horn antenna has a gold plated brass body and a precision tolerance UG-385/U round cover flange. The PEWAN1037 WR-15 waveguide conical gain horn antenna offers low gain variation across its operating frequency range.

Configuration

Design	WR-15 Conical Gain Horn
Pattern	Directional
Polarization	Linear

Electrical Specifications

Description	Minimum	Typical	Maximum	Units
Frequency Range	58		68	GHz
Nominal Gain		10		dBi
Horizontal Half Power Beam Width		58		Degrees
Vertical Half Power Beam Width		53		Degrees
VSWR		1.15:1		

Mechanical Specifications

Size

Length	1.41 in [35.81 mm]
Width	0.75 in [19.05 mm]
Height	0.75 in [19.05 mm]
Weight	0.039 lbs [17.69 g]

Waveguide Interface

Waveguide Size	WR-15
Flange Type	Round Cover
Flange Designation	UG-385/U

Click the following link (or enter part number in "SEARCH" on website) to obtain additional part information including price, inventory and certifications: WR-15 Waveguide Conical Gain Horn Antenna Operating from 58 GHz to 68 GHz with a Nominal 10 dBi Gain with UG-385/U Round Cover Flange PEWAN1037

Pasternack Enterprises, Inc. • P.O. Box 16759, Irvine, CA 92623
Phone: (866) 727-8376 or (949) 261-1920 • **Fax:** (949) 261-7451
Sales@Pasternack.com • Techsupport@Pasternack.com

© 2019 Pasternack Enterprises All Rights Reserved

WR-15 Waveguide Conical Gain Horn Antenna Operating from 58 GHz to 68 GHz with a Nominal 10 dBi Gain with UG-385/U Round Cover Flange

Body Material and Plating	Brass, Gold

Compliance Certifications (see product page for current document)

Plotted and Other Data

Typical Performance Data

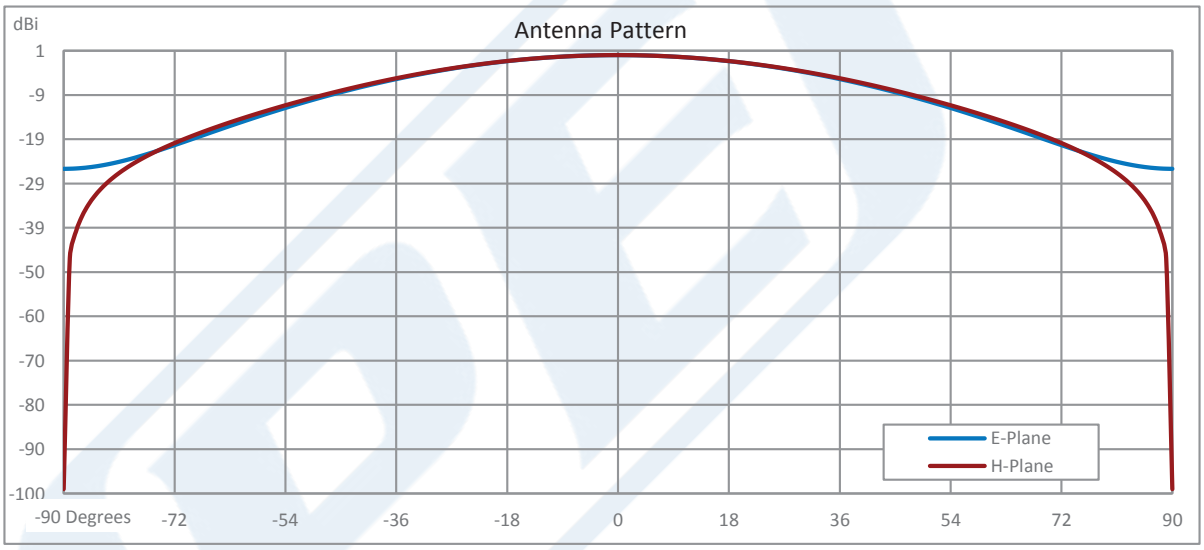

Click the following link (or enter part number in "SEARCH" on website) to obtain additional part information including price, inventory and certifications: WR-15 Waveguide Conical Gain Horn Antenna Operating from 58 GHz to 68 GHz with a Nominal 10 dBi Gain with UG-385/U Round Cover Flange PEWAN1037

Pasternack Enterprises, Inc. • P.O. Box 16759, Irvine, CA 92623
Phone: (866) 727-8376 or (949) 261-1920 • **Fax:** (949) 261-7451
Sales@Pasternack.com • Techsupport@Pasternack.com

© 2019 Pasternack Enterprises All Rights Reserved

WR-15 Waveguide Conical Gain Horn Antenna Operating from 58 GHz to 68 GHz with a Nominal 10 dBi Gain with UG-385/U Round Cover Flange

Gain Horns Technical Data Sheet PEWAN1037

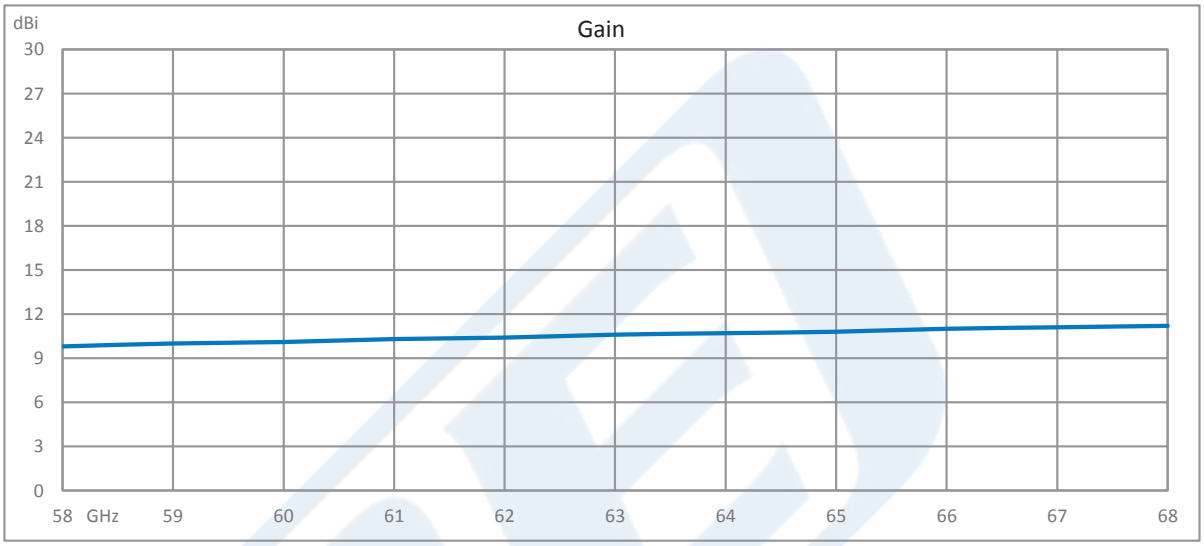

WR-15 Waveguide Conical Gain Horn Antenna Operating from 58 GHz to 68 GHz with a Nominal 10 dBi Gain with UG-385/U Round Cover Flange from Pasternack Enterprises has same day shipment for domestic and International orders. Our RF, microwave and millimeter wave products maintain a 99.4% availability and are part of the broadest selection in the industry.

Click the following link (or enter part number in “SEARCH” on website) to obtain additional part information including price, inventory and certifications: WR-15 Waveguide Conical Gain Horn Antenna Operating from 58 GHz to 68 GHz with a Nominal 10 dBi Gain with UG-385/U Round Cover Flange PEWAN1037

URL: https://www.pasternack.com/wr-15-waveguide-gain-horn-antenna-10dbi-ug-385-round-flange-pewan1037-p.aspx

The information contained in this document is accurate to the best of our knowledge and representative of the part described herein. It may be necessary to make modifications to the part and/or the documentation of the part, in order to implement improvements. Pasternack reserves the right to make such changes as required. Unless otherwise stated, all specifications are nominal. Pasternack does not make any representation or warranty regarding the suitability of the part described herein for any particular purpose, and Pasternack does not assume any liability arising out of the use of any part or documentation.

Pasternack Enterprises, Inc. • P.O. Box 16759, Irvine, CA 92623
Phone: (866) 727-8376 or (949) 261-1920 • **Fax:** (949) 261-7451
Sales@Pasternack.com • Techsupport@Pasternack.com

© 2019 Pasternack Enterprises All Rights Reserved

PEWAN1037 CAD Drawing

WR-15 Waveguide Conical Gain Horn Antenna Operating from 58 GHz to 68 GHz with a Nominal 10 dBi Gain with UG-385/U Round Cover Flange

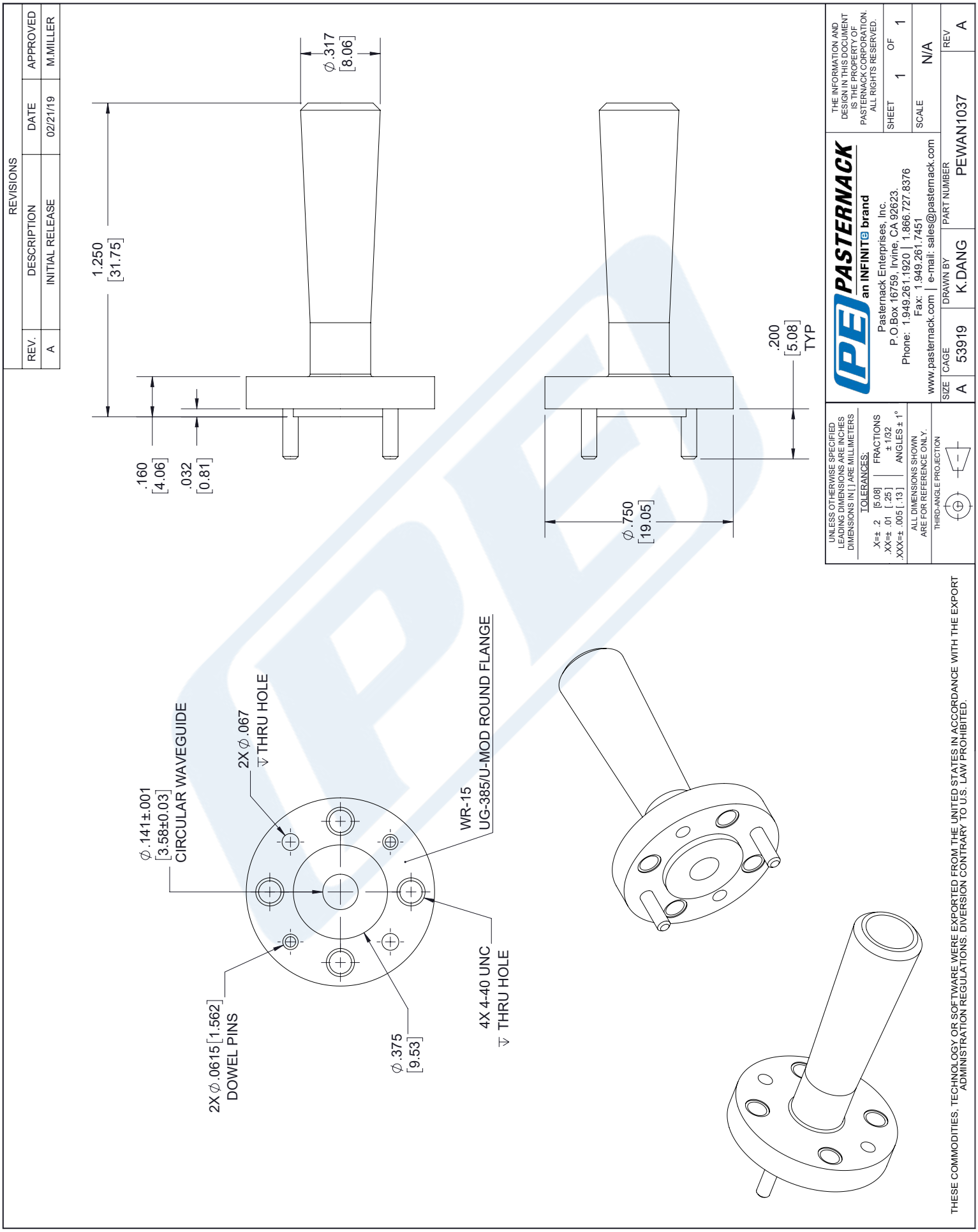

© 2019 Pasternack Enterprises All Rights Reserved