CATALOG NUMBER	MATERIAL NUMBER	CABLE RANGE	LENGTH "M"	LENGTH "B"	BREAK STRENGTH* (LBS/N)	UL LISTED	CSA APPROVED	PRODUCT SELECTION NUMBER
36101	1300950225	.75-.99 / 19.1-25.1	13.00±1.50 / 330.2±38.1	7.00±1.00 / 177.8±25.4	3000 / 13345	NO	YES	SCK075-1
36102	1300950227	1.00-1.24 / 25.4-31.5	16.00±2.00 / 406.4±50.8	8.00±1.00 / 203.2±25.4	4200 / 18683			SCK100-1
36103	1300950229	1.25-1.49 / 31.8-37.8	17.00±2.00 / 431.8±50.8	8.00±1.00 / 203.2±25.4	5500 / 24465			SCK125-1
36104	1300950230	1.50-1.74 / 38.1-44.2	18.00±2.00 / 457.2±50.8	9.00±1.00 / 228.6±25.4	7400 / 32917			SCK150-1
36105	1300950231	1.75-1.99 / 44.5-50.5	19.00±2.00 / 482.6±50.8	10.00±1.00 / 254.0±25.4	11000 / 48930			SCK175-1
36106	1300950232	2.00-2.49 / 50.8-63.2	20.00±2.00 / 508.0±50.8	10.00±1.00 / 254.0±25.4	11000 / 48930			SCK200-1
36107	1300950233	2.50-2.99 / 63.5-75.9	21.00±2.50 / 533.4±63.5	10.00±1.00 / 254.0±25.4	11000 / 48930			SCK250-1
36108	1300950234	3.00-3.49 / 76.2-88.6	22.00±2.50 / 558.8±63.5	12.00±1.00 / 304.8±25.4	16000 / 71172			SCK300-1
36109	1300950235	3.50-3.99 / 88.9-101.3	23.00±2.50 / 584.2±63.5	12.00±1.00 / 304.8±25.4	16000 / 71172			SCK350-1

* TO DETERMINE RECOMMENDED WORKING LOAD, DIVIDE BREAK STRENGTH BY 5.

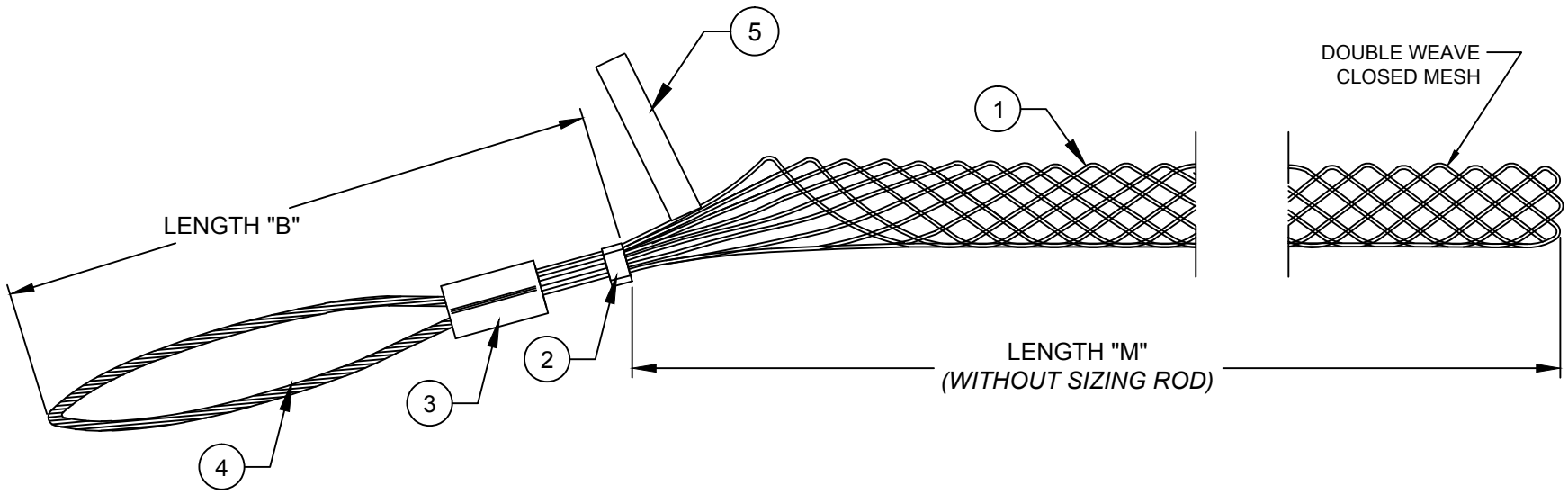

ITEM	DESCRIPTION	MATERIAL
1	WIRE MESH	GALVANIZED STEEL
2	CRIMP CONNECTOR	ALUMINUM
3	FERRULE	ALUMINUM
4	BALE WIRE	STAINLESS STEEL
5	LABEL	MYLAR

RELEASE SALES DRW
EC NO: IPG2015-1861 2014/09/05
DRWN: HRUIZ01 2014/09/05
CHKD: HKNEELAN 2014/09/05
APPR: JFMURPHY 2016/09/09
DESCRIPTION
A
REV

QUALITY SYMBOLS
▼=0
(C)=0

GENERAL TOLERANCES (UNLESS SPECIFIED)

	mm	INCH
4 PLACES	±---	±---
3 PLACES	±---	±.005
2 PLACES	±.13	±.010
1 PLACE	±.25	±.020

ANGULAR ±1/2°

DRAFT WHERE APPLICABLE MUST REMAIN WITHIN DIMENSIONS

DIMENSION STYLE: INCH/MM
SCALE: NTS
DESIGN UNITS: INCH
THIRD ANGLE PROJECTION

DRAWN BY: HRUIZ01 DATE: 2014/09/05
CHECKED BY: HKNEELAN DATE: 2014/09/05
APPROVED BY: JFMURPHY DATE: 2016/09/09

TITLE
PULLING GRIPS
HEAVY DUTY-SLACK EYE
DOUBLE WEAVE CLOSED MESH

MOLEX INCORPORATED

MATERIAL NO.: SEE TABLE
DOCUMENT NO.: SD-130095-113
SHEET NO.: 1 OF 1
SIZE: A

THIS DRAWING CONTAINS INFORMATION THAT IS PROPRIETARY TO MOLEX INCORPORATED AND SHOULD NOT BE USED WITHOUT WRITTEN PERMISSION