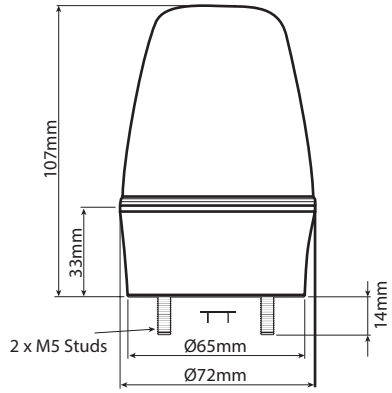

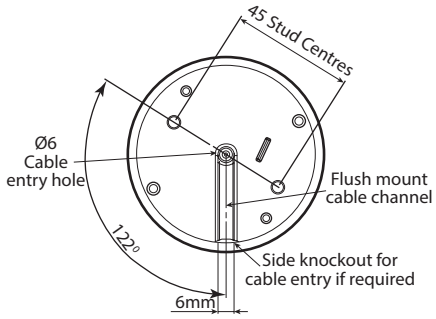

Industrial LED ECO Beacons > LEDS 100 Series

Product overview

The LEDS 100 economy series is suitable for light commercial & industrial signalling applications where local indication is required.

These beacons have two selectable stages of alarm, flashing or continuous (static) mode, selectable by a jumper link on the PCB. The design also allows for a third wire connection giving flexibility to switch from a pre-set static mode to flashing.

The LED ECO range has been designed predominantly to offer a cost effective solution against more traditional incandescent types of lamps, whether through new plant and machinery installations or existing facility upgrades.

This design allows for termination inside the enclosure through the base of the beacon, either from directly below or using a 6mm cabling channel at 90° to the base for surface cabling. The LEDS version incorporates two mounting studs 2 x 5mm on 45mm centres.

Features

- Continuously rated
- LED long life
- Low current consumption
- Suitable for surface or wall mounting
- Optional wall bracket & guard available - see accessories
- 2 stud fix
- 360° light output around the vertical axis
- Dustproof and Weatherproof

Material

UV Stable Polycarbonate Lens

UV Stable ABS Plastic Base

LEDS 100 Series > Ordering Information

Code No:	Voltage:	Light Source:	Current:
LEDS100-01	8-20v Ac/Dc ≃	8 SMT LEDs	430mA •
LEDS100-02	20-30v Ac/Dc ≃	8 SMT LEDs	110mA ••
LEDS100-03	48v Ac ~	8 SMT LEDs	tba
LEDS100-05	40-380v Dc --- 85-280v Ac ~	8 SMT LEDs	35mA •••

• at 12v Dc •• at 24v Dc ••• at 230v Ac

ADD THE FOLLOWING LENS CODES TO THE PRODUCT WHEN ORDERING 01 02 04

Kg 0.14 | ~ 50/60 Hz | °C -25+55 | IP 65 | FPM 160 | INDUSTRIAL

APPROVALS and CONFORMITIES