EPC-B5505

Embedded System with 4 PCIE Expansion Slots

Features

- 4U Embedded System for Micro-ATX motherboard
- Up to 4 PCIE Expansion Slots
- 2 Shock Resistant 2.5" drive bays
- To accommodate 300W PSU for different applications
- Plentiful IO Ports for Various Applications

Specifications

Model Name		EPC-B5505
Motherboard		AIMB-505G2-00A1E
Dimensions (W x H x D)	Dimensions (W x H x D)	380 x 176 x 454.1 mm
System Thermal Design	CPU Cooler	CPU cooler
	PSU	300W
	System Fan	One
Environmental Conditions	Operating Temperature	0 ~ 40 °C
	Non-operating Temperature	-20 ~ 60 °C
	Humidity	10 ~ 95% @ 40 °C, non-condensing
	Vibration (5 ~5 00Hz)	3Grms (w/o Expansion Cards)
CPU	CPU	I7-7700/ I7-7700T i7-6700 i7-6700TE I5-7500/ I5-7500T i5-6500 i5-6500TE I3-7101/ I3-7101TE i3-6100 i3-6100TE Pentium G4400/ G4400TE Celeron G3900/ G3900TE
Chipset	Chipset	H110
Storage	Storage Bay	2 x 2.5" HDD/SSD
Front IO	Power switch	1
	LED	1 Power LED 1 HDD LED 2 LAN LED
	Power remote Jack	1 2.5Φ Jack
Rear IO (By Motherboard)	Display ports	VGA x1, DVI x1, DP x1 (Only Two Independent Displays)
	USB	4 USB3.2 Gen2 x1 4 USB2.0
	Serial port	1 COM
	LAN	2 RJ45 GbE
	Audio	1 Mic-in, 1 Line-out
Certification	EMC / Safety / Certifications	CE / FCC (Class B) / CCC / CB / UL
Power Requirements		300W ATX / AT mode
Weight	Weight	15.5
PCIE Expansions for 300W		1 PCIE x16 2 PCIE x1 1 PCI

All product specifications are subject to change without notice.

Dimensions

Unit: mm

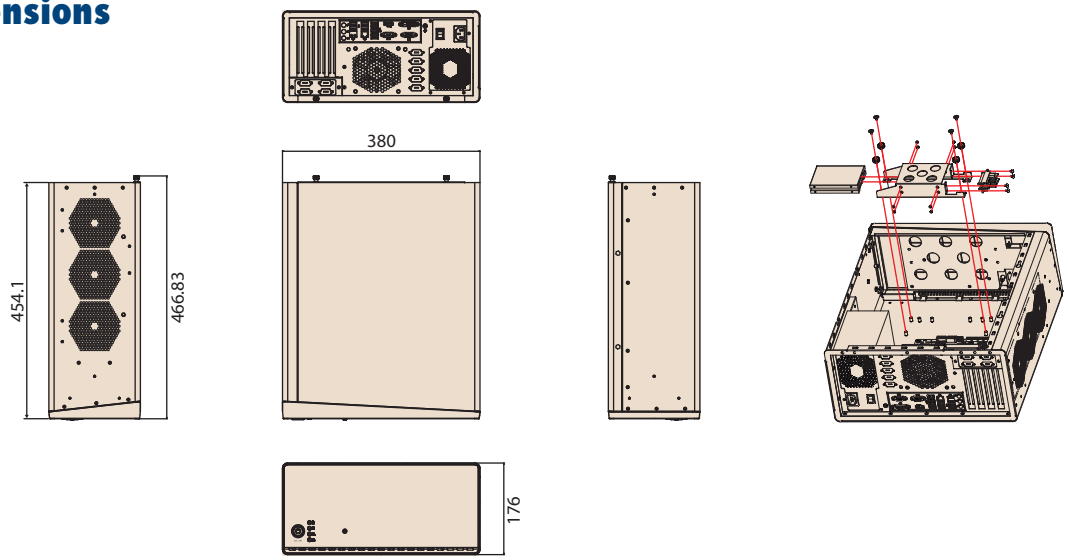

Front View

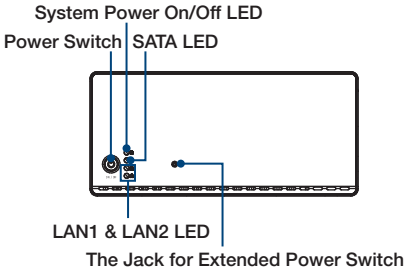

Rear View

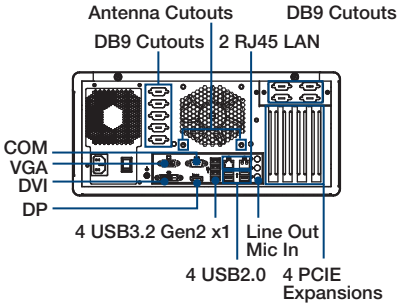

Inside

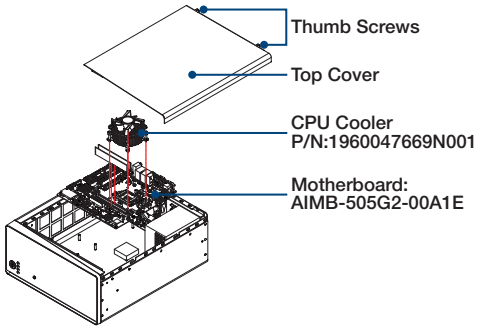

Ordering Information

Model	PSU	Chipset	UDIMM 288-Pin Slot	2.5" SATA Bay	Rear IO							Expansion		
					Display Port	DVI	VGA	GbE	USB3.2 Gen2 x1	USB2.0	COM	PCI	PCIE x1	PCIE x16
EPC-B5505-AB00000 Bare-bone	300W	H110	2	2	1	1	1	2	4	4	1	1	2	1

Remarks
Bare-bone, NO CPU, NO RAM, NO Storages

Packing List

Item	Part Number	Quantity
CPU Cooler	1960047669N001	1
2.5" Storage Metal Tray	1960106298N000	1
SATA2 Cable	1700032173-01	1
SATA1 Cable	1700032174-01	1
Screw M3x4 To Fix SATA Cable	193B030430	4
Screw M3x6 To Fix 2.5" Storage Tray	1930004828	4
Rubber for 2.5" Storage Tray	1990001365	4
Screw M3*4 To Fix 2.5" Storage	1930005836-01	8
Adhesive backed mount	1990025684S000	1
CABLE TIE (P.G. GT-160M)	1992822010	4

Optional Accessory

Item	Part Number	Description
Power Cable	1700000596-11	Power cable 3-pin 183cm, China type
	1702031801	Power cable 3-pin 183cm, UK type
	1702002600	Power cable 3-pin 183cm, USA type
	1702002605	Power cable 3-pin 183cm, Europe type
	1700000237-01	Power cable 3-pin 183cm, Japan type
Bracket	EPC-BRKB5-CARD	Metal Brackets for PCIE Expansion Cards
	EPC-BRKB5-RACK	EPC-B5000 Rack Mount Bracket
COM Cable	EPC-CABB5-COM05	EPC-B5505 COM cable peripheral (1 1to1 DB-9 cable, 1 1to4 DB-9 cable)

Embedded OS/API

OS/API	Part Number	Description
WES7E	2070014651	Image WES7E
WE8.1	2070014658	Image WE8.1
Win 10	2070015047 / 2070015048	image W10