ICL761X–ICL764X

Single/Dual/Triple/Quad Operational Amplifiers

General Description

The ICL761X–ICL764X family of monolithic CMOS op amps combine ultra-low input current with low-power operation over a wide supply voltage range. With pin-selectable quiescent currents of 10µA, 100µA, or 1000µA per amplifier, these op amps will operate from ±1V to ±8V power supplies, or from single supplies from 2V to 16V. The CMOS outputs swing to within milli-volts of the supply voltages.

The ultra-low bias current of 1pA makes this family of op amps ideal for long time constant integrators, picoammeters, low droop rate sample/hold amplifiers and other applications where input bias and offset currents are critical. A low noise current of 0.01pA$\sqrt{Hz}$ and an input impedance of $10^{12}\Omega$ ensure optimum performance with very high source impedances in such applications as pH meters and photodiode amplifiers.

Applications

- Battery-Powered Instruments
- Low-Leakage Amplifiers
- Long-Time Constant Integrators
- Low-Frequency Active Filters
- Hearing Aids and Microphone Amplifiers
- Low Droop Rate Sample/Hold Amplifiers
- Picoammeters

Pin Configuration

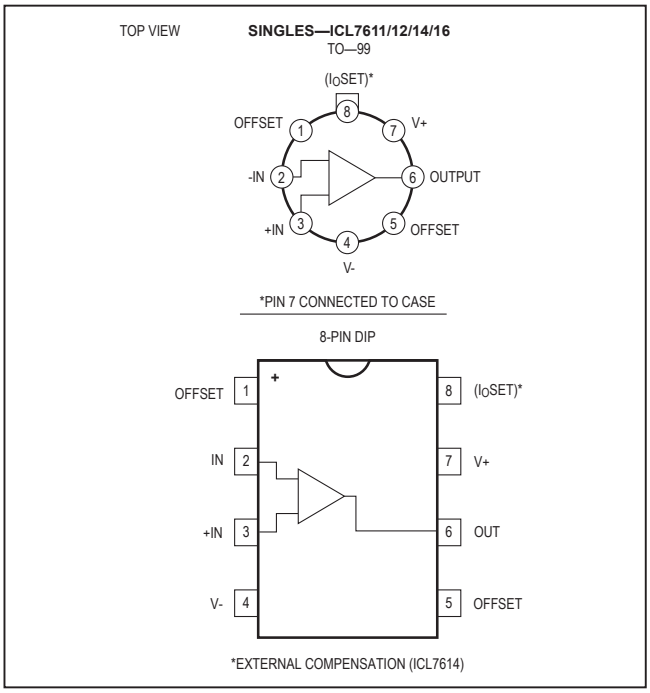

Features

- Pin-for-Pin Second Source
- 1pA Typical Bias Current—4nA (max) at +125°C
- ±1V to ±8V Wide Supply Voltage Range
- Industry-Standard Pinouts
- Programmable Quiescent Currents of 10µA, 100µA, and 1000µA
- Monolithic, Low-Power CMOS Design

Ordering Information

ICL76XX	M	N	OP
	V_{OS} SELECTION	TEMP RANGE	PKG CODE
	A = 2mV	C = 0°C to 70°C	TV= 8-Pin TO-99
	B = 5mV	E = -40°C to +85°C	PA = 8-Pin Plastic Dip
	C = 10mV	M = -55°C to +125°C	SA = 8-Pin Small SO
	D = 15mV		JD = 14-Pin CERDIP
	E = 20mV		PD = 14-Pin Plastic Dip
			SD = 14-Pin Small SO
			JE = 16-Pin CERDIP
			PE = 16-Pin Plastic Dip
			SE = 16-Pin Small SO
			WE – 16-Pin Wide SO

Typical Operating Circuit appears at end of data sheet.

Ordering Information (continued)

	ICL7611	ICL7612	ICL7614	ICL7616	ICL7621	ICL7622	ICL7631	ICL7632	ICL7641	ICL7642
Compensated	X	X		X	X	X	X		X	X
Externally Compensated			X							
Extended CMVR		X		X						
Offset null capability	X	X	X	X		X				
Programmable I_Q	X	X		X			X	X		
Fixed I_Q-10µA										X
Fixed I_Q-100µA			X		X	X				
Fixed I_Q-1mA									X	

Ordering Information (Single/Dual)

PART	TEMP RANGE	PIN-PACKAGE
ICL761XACPA	0°C to +70°C	8 Plastic Dip
ICL761XACSA	0°C to +70°C	8 Slim SO
ICL761XACTV	0°C to +70°C	TO-99 Metal Can
ICL761XAMTV	-55°C to +125°C	TO-99 Metal Can
ICL761XBCPA	0°C to +70°C	8 Plastic Dip
ICL761XBCSA	0°C to +70°C	8 Slim SO
ICL761XBCTV	0°C to +70°C	TO-99 Metal Can
ICL761XBESA	-40°C to +85°C	8 Slim SO
ICL761XBMTV	-55°C to +125°C	TO-99 Metal Can
ICL761XDCPA	0°C to +70°C	8 Plastic Dip
ICL761XDCSA	0°C to +70°C	8 Slim SO
ICL761XDCTV	0°C to +70°C	TO-99 Metal Can
ICL761XDESA	-40°C to +85°C	8 Slim SO
ICL7621ACPA	0°C to +70°C	8 Plastic Dip
ICL7621ACSA	0°C to +70°C	8 Slim SO
ICL7621ACTV	0°C to +70°C	TO-99 Metal Can
ICL7621AMTV	-55°C to +125°C	TO-99 Metal Can
ICL7621BCPA	0°C to +70°C	8 Plastic Dip

PART	TEMP RANGE	PIN-PACKAGE
ICL7621BCSA	0°C to +70°C	8 Slim SO
ICL7621BCTV	0°C to +70°C	TO-99 Metal Can
ICL7621BMTV	-55°C to +125°C	TO-99 Metal Can
ICL7621DCPA	0°C to +70°C	8 Plastic Dip
ICL7621DCSA	0°C to +70°C	8 Slim SO
ICL7621DCTV	0°C to +70°C	TO-99 Metal Can
ICL7621DESA+	-40°C to +85°C	8 Slim SO
ICL7622ACPD	0°C to +70°C	14 Plastic Dip
ICL7622ACSD	0°C to +70°C	14 Slim SO
ICL7622ACJD	0°C to +70°C	14 CERDIP
ICL7622AMJD	-55°C to +125°C	14 CERDIP
ICL7622BCPD	0°C to +70°C	14 Plastic Dip
ICL7622BCSA	0°C to +70°C	14 Slim SO
ICL7622BCJD	0°C to +70°C	14 CERDIP
ICL7622BMJD	-55°C to +125°C	14 CERDIP
ICL7622DCPD	0°C to +70°C	14 Plastic Dip
ICL7622DCSD	0°C to +70°C	14 Slim SO
ICL7622DCJD	0°C to +70°C	14 CERDIP

Note: *X above is replaced by: 1, 2, 4, 8.*

Pin Configurations

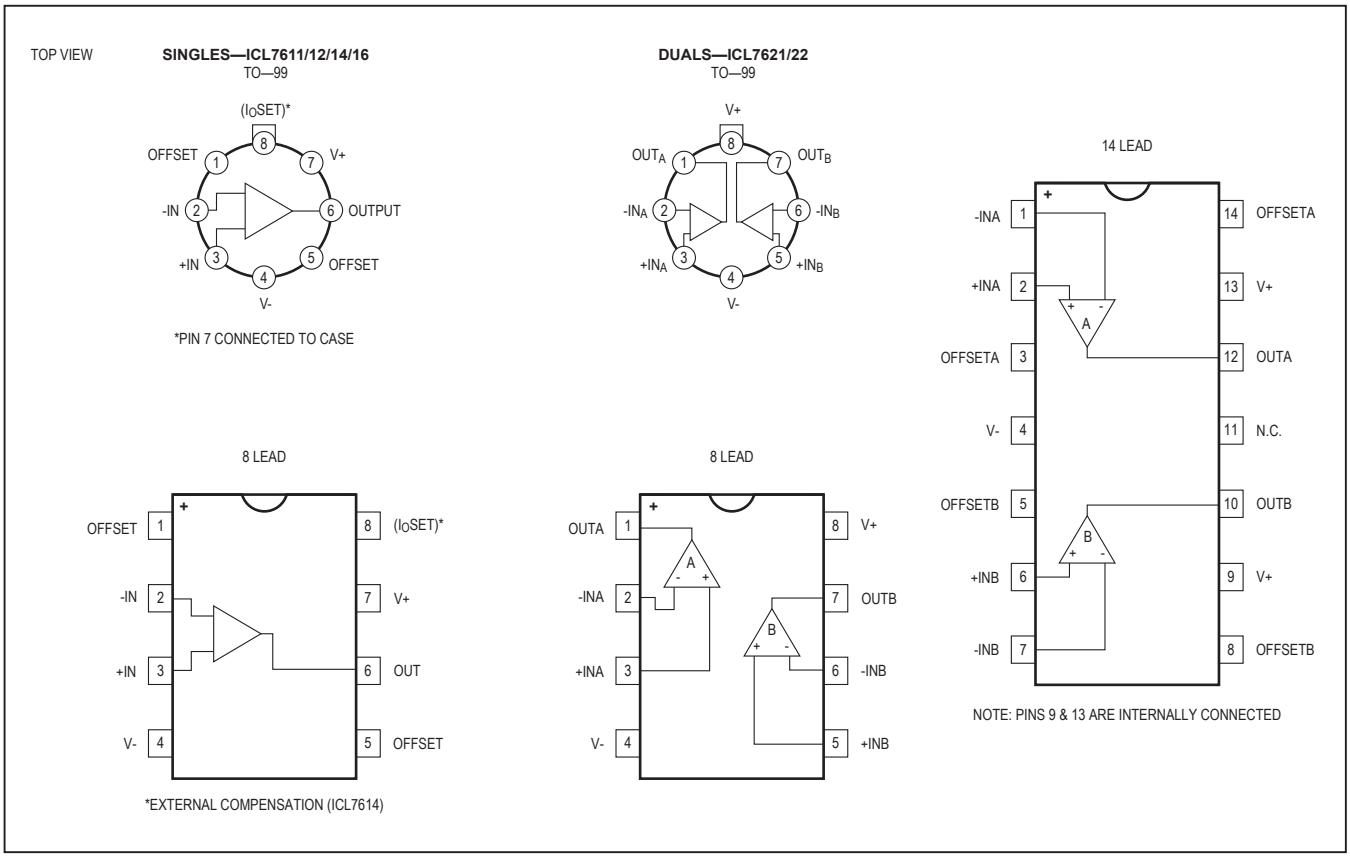

Absolute Maximum Ratings (Single/Dual)

Total Supply Voltage (V+ to V-) .....+18V
Input Voltage .....(V+ + 0.3V) to (V- - 0.3V)
Differential Input Voltage (Note 1) ....±(V+ + 0.3V) to (V- - 0.3V)
Duration of Output Short Circuit (Note 2) ..... Unlimited
Continuous Power Dissipation (T_A = +25°C)
- TO-99 Metal Can (derate 2mW/°C above +25°C) 250mW
- 8-Pin Minidip (derate 2mW/°C above +25°C) 250mW
- 14-Pin Plastic (derate 3mW/°C above +25°C) 375mW
- 14-Pin CERDIP (derate 4mW/°C above +25°C) 500mW
- 16-Pin Plastic (derate 3mW/°C above +25°C) 375mW
- 16-Pin CERDIP (derate 4mW/°C above +25°C) 500mW

Operating Temperature Ranges:
M Series ..... -55°C to +125°C
E Series ..... -40°C to +85°C
C Series ..... -0°C to +70°C
Storage Temperature Range ..... -55°C to +150°C
Lead Temperature (soldering, 10s) . .....+300°C
Soldering Temperature (reflow)
- Lead(Pb)-Free Packages .....+260°C
- Packages Containing Lead.....+240°C

Stresses beyond those listed under "Absolute Maximum Ratings" may cause permanent damage to the device. These are stress ratings only, and functional operation of the device at these or any other conditions beyond those indicated in the operational sections of the specifications is not implied. Exposure to absolute maximum rating conditions for extended periods may affect device reliability.

Note 1: Long-term offset voltage stability will be degraded if large input differential voltages are applied for long periods of time.
Note 2: The outputs may be shorted to ground or to either supply for V_{SUPP} ≤ 10V. Care must be taken to insure that the dissipation rating is not exceeded.

Electrical Characteristics (Single/Dual)

(V_{SUPP} = ±1.0V, I_Q = 10µA, T_A = +25°C, unless otherwise noted.)

PARAMETER	SYMBOL	CONDITIONS	ICL76XXA			ICL76XXB			UNITS
			MIN	TYP	MAX	MIN	TYP	MAX	
Input Offset Voltage	V_{OS}	R_S ≤ 100kΩ, T_A = +25°C			2			5	mV
		R_S ≤ 100kΩ, T_{MIN} ≤ T_A ≤ T_{MAX}			3			7	
Temperature Coefficient of V_{OS}	$\Delta V_{OS}/\Delta T$	R_S ≤ 100kΩ		10			15		µV/°C
Input Offset Current	I_{OS}	T_A = +25°C		0.5	30		0.5	30	pA
		0°C ≤ T_A ≤ +70°C			300			300	
Input Bias Current	I_{BIAS}	T_A = +25°C		1.0	50		1.0	50	pA
		0°C ≤ T_A ≤ +70°C			500			500	
Common-Mode Voltage Range (Except ICL7612/ ICL7616)	V_{CMR}		-0.4		+0.6	-0.4		+0.6	V
Extended Common-Mode Voltage Range (ICL7612 Only)	V_{CMR}		-1.1		+0.6	-1.1		+0.6	V
Extended Common-Mode Voltage Range (ICL7616 Only)	V_{CMR}	I_Q = 10µA	-1.3		-0.3	-1.3		-0.3	V
Output Voltage Swing	V_{OUT}	R_L = 1MΩ, T_A = +25°C		±0.98			±0.98		V
		R_L = 1MΩ, 0°C ≤ T_A ≤ +70°C		±0.96			±0.96		

Electrical Characteristics (Single/Dual) (continued)

(V_{SUPP} = ±1.0V, I_Q = 10µA, T_A = +25°C, unless otherwise noted.)

PARAMETER	SYMBOL	CONDITIONS	ICL76XXA			ICL76XXB			UNITS
			MIN	TYP	MAX	MIN	TYP	MAX	
Large-Signal Voltage Gain	A_{VOL}	V_O = ±0.1V, R_L = 1MΩ, T_A = +25°C		90			90		dB
		V_O = ±0.1V, R_L = 1MΩ, 0°C ≤ T_A ≤ +70°C		80			80		
Unity-Gain Bandwidth	GBW			0.044			0.044		MHz
Input Resistance	R_{IN}			10^{12}			10^{12}		Ω
Common-Mode Rejection Ratio	CMRR	R_S ≤ 100kΩ		80			80		dB
Power-Supply Rejection Ratio	PSRR	R_S ≤ 100kΩ		80			80		dB
Input-Referred Noise Voltage	e_n	R_S = 100Ω, f = 1kHz		100			100		nV/√Hz
Input-Referred Noise Current	i_n	R_S = 100Ω, f = 1kHz		0.01			0.01		pA/√Hz
Supply Current (Per Amplifier)	I_{SUPP}	No signal, no load		6	15		6	15	µA
Slew Rate	SR	A_{VOL} = 1, C_L = 100pF, V_{IN} = 0.2V_{P-P}, R_L = 1MΩ		0.016			0.016		V/µs
Rise Time	t_r	V_{IN} = 50mV, C_L = 100pF, R_L = 1MΩ		20			20		µs
Overshoot Factor		V_{IN} = 50mV, C_L = 100pF, R_L = 1MΩ		5			5		%

Electrical Characteristics (Single/Dual)

(V_{SUPP} = ±5.0V, T_A = +25°C, unless otherwise noted.)

PARAMETER	SYMBOL	CONDITIONS	ICL76XXA			ICL76XXB			ICL76XXD			UNITS
			MIN	TYP	MAX	MIN	TYP	MAX	MIN	TYP	MAX	
Input Offset Voltage	V_{OS}	R_S ≤ 100kΩ, T_A = +25°C			2			5			15	mV
		R_S ≤ 100kΩ, T_{MIN} ≤ T_A ≤ T_{MAX}			3			7			20	
Temperature Coefficient of V_{OS}	$\Delta V_{OS}/\Delta T$	R_S ≤ 100kΩ		10			15			25		µV/°C
Input Offset Current	I_{OS}	T_A = +25°C		0.5	30		0.5	30		0.5	30	pA
		C: 0°C ≤ T_A ≤ +70°C			300			300			300	
		E: -40°C ≤ T_A ≤ +85°C			800			800			800	
		M: -55°C ≤ T_A ≤ +125°C			800			800			800	

Electrical Characteristics (Single/Dual) (continued)

(V_{SUPP} = ±5.0V, T_A = +25°C, unless otherwise noted.)

PARAMETER	SYMBOL	CONDITIONS	ICL76XXA			ICL76XXB			ICL76XXD			UNITS
			MIN	TYP	MAX	MIN	TYP	MAX	MIN	TYP	MAX	
Input Bias Current	I_{BIAS}	T_A = +25°C		1.0	50		1.0	50		1.0	50	pA
		C: 0°C ≤ T_A ≤ +70°C			400			400			400	
		E: -40°C ≤ T_A ≤ +85°C			4000			4000			4000	
		M: -55°C ≤ T_A ≤ +125°C			4000			4000			4000	
Common-Mode Voltage Range (Except ICL7612/ ICL7616)	V_{CMR}	I_Q = 10µA (Note 3)	+4.4			+4.4			+4.4			V
			-4.0			-4.0			-4.0			
		I_Q = 100µA (Note 3)	+4.2			+4.2			+4.2			
			-4.0			-4.0			-4.0			
		I_Q = 1mA (Note 3)	+3.7			+3.7			+3.7			
			-3.7			-3.7			-3.7			
Extended Common-Mode Voltage Range (ICL7612 Only)	V_{CMR}	I_Q = 10µA	±5.3			±5.3			±5.3			V
		I_Q = 100µA	+5.3			+5.3			+5.3			
			-5.1			-5.1			-5.1			
		I_Q = 1mA	+5.3			+5.3			+5.3			
			-4.5			-4.5			-4.5			
Extended Common-Mode Voltage Range (ICL7616 Only)	V_{CMR}	I_Q = 10µA	-5.3			-5.3			-5.3			V
			+3.7			+3.7			+3.5			
		I_Q = 100µA	-5.1			-5.1			-5.1			
			+3.0			+3.0			+2.7			
		I_Q = 1mA	-4.5			-4.5			-4.5			
			+2.0			+2.0			+1.7			

Electrical Characteristics (Single/Dual) (continued)

(V_{SUPP} = ±5.0V, T_A = +25°C, unless otherwise noted.)

PARAMETER	SYMBOL	CONDITIONS		ICL76XXA			ICL76XXB			ICL76XXD			UNITS
				MIN	TYP	MAX	MIN	TYP	MAX	MIN	TYP	MAX	
Output Voltage Swing	V_{OUT}	I_Q = 10µA, R_L = 1MΩ (Note 3)	T_A = +25°C	±4.9			±4.9			±4.9			V
			C: 0°C ≤ T_A ≤ +70°C	±4.8			±4.8			±4.8			
			E: -40°C ≤ T_A ≤ +85°C	±4.7			±4.7			±4.7			
			M: -55°C ≤ T_A ≤ +125°C	±4.7			±4.7			±4.7			
		I_Q = 100µA, R_L = 100kΩ	T_A = +25°C	±4.9			±4.9			±4.9			
			C: 0°C ≤ T_A ≤ +70°C	±4.8			±4.8			±4.8			
			E: -40°C ≤ T_A ≤ +85°C	±4.5			±4.5			±4.5			
			M: -55°C ≤ T_A ≤ +125°C	±4.5			±4.5			±4.5			
		I_Q = 1mA, R_L = 10kΩ (Note 3)	T_A = +25°C	±4.5			±4.5			±4.5			
			C: 0°C ≤ T_A ≤ +70°C	±4.3			±4.3			±4.3			
			E: -40°C ≤ T_A ≤ +85°C	±4.0			±4.0			±4.0			
			M: -55°C ≤ T_A ≤ +125°C	±4.0			±4.0			±4.0			

Electrical Characteristics (Single/Dual) (continued)

(V_{SUPP} = ±5.0V, T_A = +25°C, unless otherwise noted.)

PARAMETER	SYMBOL	CONDITIONS		ICL76XXA			ICL76XXB			ICL76XXD			UNITS
				MIN	TYP	MAX	MIN	TYP	MAX	MIN	TYP	MAX	
Large-Signal Voltage Gain	A_{VOL}	V_O = ±4.0V R_L = 1MΩ, I_Q = 10µA	T_A = +25°C	86	104		80	104		80	104		dB
			C: 0°C ≤ T_A ≤ +70°C	80			75			75			
			E: -40°C ≤ T_A ≤ +85°C	74			68			68			
			M: -55°C ≤ T_A ≤ +125°C	74			68			68			
		V_O = ±4.0V, R_L = 100kΩ, I_Q = 100µA	T_A = +25°C	86	102		80	102		80	102		
			C: 0°C ≤ T_A ≤ +70°C	80			75			75			
			E: -40°C ≤ T_A ≤ +85°C	74			68			68			
			M: -55°C ≤ T_A ≤ +125°C	74			68			68			
		V_O = ±4.0V, R_L = 10kΩ, I_Q = 1mA (Note 3)	T_A = +25°C	80	83		76	83		76	83		
			C: 0°C ≤ T_A ≤ +70°C	76			72			72			
			E: -40°C ≤ T_A ≤ +85°C	72			68			68			
			M: -55°C ≤ T_A ≤ +125°C	72			68			68			

Electrical Characteristics (Single/Dual) (continued)

(V_{SUPP} = ±5.0V, T_A = +25°C, unless otherwise noted.)

PARAMETER	SYMBOL	CONDITIONS		ICL76XXA			ICL76XXB			ICL76XXD			UNITS
				MIN	TYP	MAX	MIN	TYP	MAX	MIN	TYP	MAX	
Unity-Gain Bandwidth	GBW	I_Q = 10µA (Note 3)			0.044			0.044			0.044		MHz
		I_Q = 100µA			0.48			0.48			0.48		
		I_Q = 1mA (Note 3)			1.4			1.4			1.4		
Input Resistance	R_{IN}				1012			1012			1012		Ω
Common-Mode Rejection Ratio	CMRR	R_S ≤ 100kΩ, I_Q = 10µA (Note 3)		76	96		70	96		70	96		dB
		R_S ≤ 100kΩ, I_Q = 100µA		76	91		70	91		70	91		
		R_S ≤ 100kΩ, I_Q = 1mA (Note 3)		66	87		60	87		60	87		
Power-Supply Rejection Ratio	PSRR	R_S ≤ 100kΩ, I_Q = 10µA (Note 3)		80	94		80	94		80	94		dB
		R_S ≤ 100kΩ, I_Q = 100µA		80	86		80	86		80	86		
		R_S ≤ 100kΩ, I_Q = 1mA (Note 3)		70	77		70	77		70	77		
Input-Referred Noise Voltage	e_n	R_S = 100Ω, f = 1kHz			100			100			100		nV/√Hz
Input-Referred Noise Current	i_n	R_S = 100Ω, f = 1kHz			0.01			0.01			0.01		pA/√Hz
Supply Current (Per Amplifier)	I_{SUPP}	No signal, no load	I_Q = 10µA (Note 3)		0.01	0.02		0.01	0.02		0.01	0.02	mA
			I_Q = 100µA		0.1	0.25		0.1	0.25		0.1	0.25	
			I_Q = 1mA (Note 3)		1.0	2.5		1.0	2.5		1.0	2.5	
Channel Separation	V_{O1} / V_{O2}	A_{VOL} = 100			120			120			120		dB

Electrical Characteristics (Single/Dual) (continued)

(V_{SUPP} = ±5.0V, T_A = +25°C, unless otherwise noted.)

PARAMETER	SYMBOL	CONDITIONS		ICL76XXA			ICL76XXB			ICL76XXD			UNITS
				MIN	TYP	MAX	MIN	TYP	MAX	MIN	TYP	MAX	
Slew Rate (Note 4)	SR	A_{VOL} = 1, C_L = 100pF, V_{IN} = $8V_{P-P}$	I_Q = 10µA (Note 3), R_L = 1MΩ		0.016			0.016			0.016		V/µs
			I_Q = 100µA, R_L = 100kΩ		0.16			0.16			0.16		
			I_Q = 1mA (Note 3), R_L = 10kΩ		1.6			1.6			1.6		
Rise Time (Note 4)	t_r	V_{IN} = 50mV, C_L = 100pF	I_Q = 10µA (Note 3), R_L = 1MΩ		20			20			20		µs
			I_Q = 100µA, R_L = 100kΩ		2			2			2		
			I_Q = 1mA (Note 3), R_L = 10kΩ		0.9			0.9			0.9		
Overshoot Factor (Note 4)		V_{IN} = 50mV, C_L = 100pF	I_Q = 10µA (Note 3), R_L = 1MΩ		5			5			5		%
			I_Q = 100µA, R_L = 100kΩ		10			10			10		
			I_Q = 1mA (Note 3), R_L = 10kΩ		40			40			40		

Note 3: AICL7611, ICL7612, ICL7616 only.
Note 4: ICL7814; 39pF from pin 6 to pin 8.

Ordering Information (Triple/Quad)

PART	TEMP RANGE	PIN-PACKAGE
ICL763XBCPE	0°C to +70°C	16 Plastic Dip
ICL763XBCSE	0°C to +70°C	16 Slim SO
ICL763XCCPE	0°C to +70°C	16 Plastic Dip
ICL763XCCSE	0°C to +70°C	16 Slim SO
ICL763XECPE	0°C to +70°C	16 Plastic Dip
ICL763XECSE	0°C to +70°C	16 Slim SO
ICL763XBCJE	0°C to +70°C	16 CERDIP
ICL763XCCJE	0°C to +70°C	16 CERDIP
ICL763XECJE	0°C to +70°C	16 CERDIP
ICL763XBMJE	-55°C to +125°C	16 CERDIP
ICL763XCMJE	-55°C to +125°C	16 CERDIP

PART	TEMP RANGE	PIN-PACKAGE
ICL764XBCPD	0°C to +70°C	14 Plastic Dip
ICL764XBCWE	0°C to +70°C	16 Wide SO
ICL764XCCPD	0°C to +70°C	14 Plastic Dip
ICL764XCCWE	0°C to +70°C	16 Wide SO
ICL764XECPD	0°C to +70°C	14 Plastic Dip
ICL764XECWE	0°C to +70°C	16 Wide SO
ICL764XBCJD	0°C to +70°C	14 CERDIP
ICL764XCCJD	0°C to +70°C	14 CERDIP
ICL764XECJD	0°C to +70°C	14 CERDIP
ICL764XBMJD	-55°C to +125°C	14 CERDIP
ICL764XCMJD	-55°C to +125°C	14 CERDIP

Note: *X above is replaced by: 1, 2.*

Pin Configurations

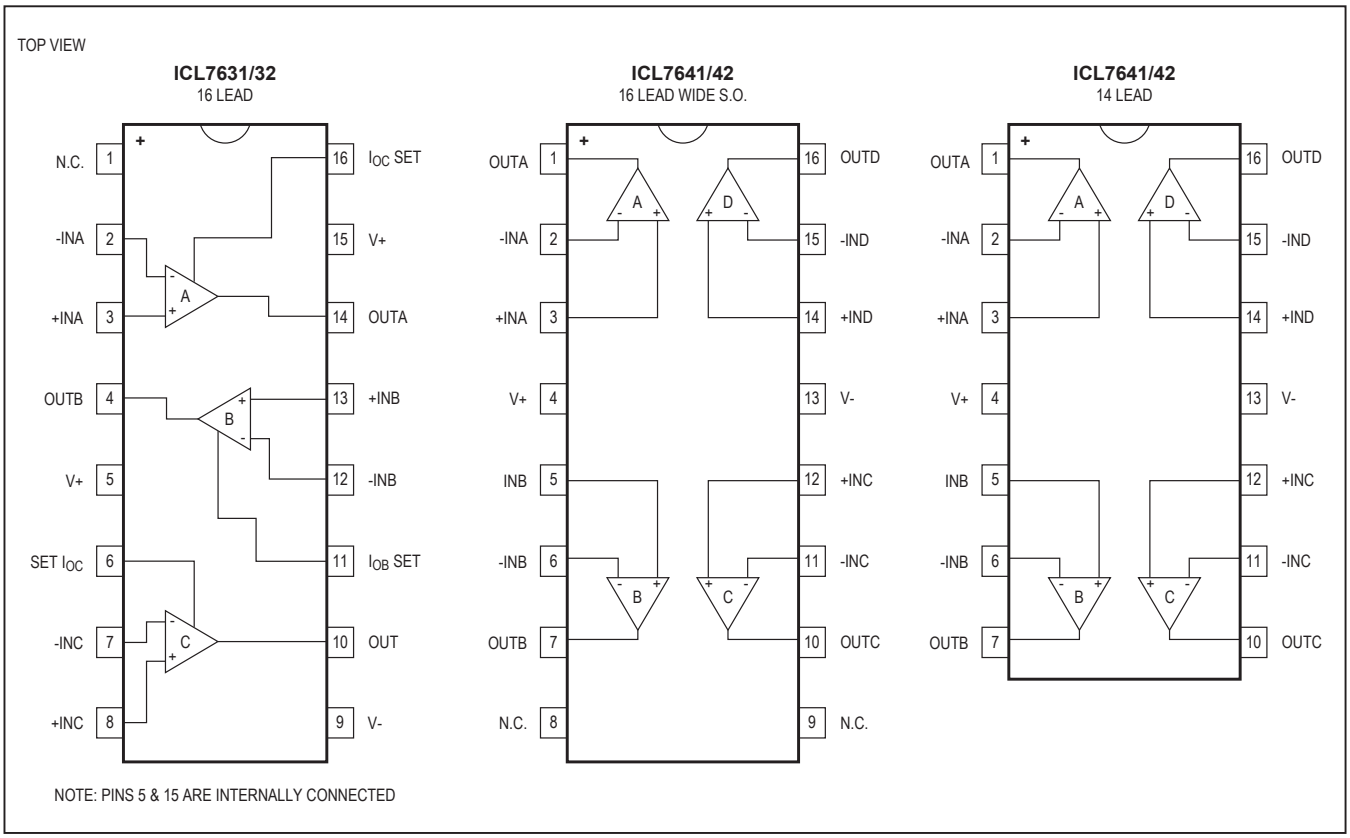

Absolute Maximum Ratings (Triple/Quad)

Total Supply Voltage (V+ to V-) .....+18V
Input Voltage .....(V+ + 0.3V) to (V- - 0.3V)
Differential Input Voltage (Note 5).....±|(V+ + 0.3V) - (V- - 0.3V)
Duration of Output Short Circuit (Note 6) ..... Unlimited
Continuous Power Dissipation (T_A = +25°C)
TO-99 Metal Can (derate 2mW/°C above +25°C).....250mW
8-Pin Minidip (derate 2mW/°C above +25°C) 250mW
14-Pin Plastic (derate 3mW/°C above +25°C) 375mW
14-Pin CERDIP (derate 4mW/°C above +25°C) 500mW
16-Pin Plastic (derate 3mW/°C above +25°C) 375mW
16-Pin CERDIP (derate 4mW/°C above +25°C) 500mW
Operating Temperature Ranges:
M Series ..... -55°C to +125°C
E Series..... -40°C to +85°C
C Series .....-0°C to +70°C
Storage Temperature Range ..... -55°C to +150°C
Lead Temperature (soldering, 10s) .....+300°C

Stresses beyond those listed under "Absolute Maximum Ratings" may cause permanent damage to the device. These are stress ratings only, and functional operation of the device at these or any other conditions beyond those indicated in the operational sections of the specifications is not implied. Exposure to absolute maximum rating conditions for extended periods may affect device reliability.

Note 5: Long-term offset voltage stability will be degraded if large input differential voltages are applied for long periods of time.
Note 6: The outputs may be shorted to ground or to either supply for V_{SUPP} ≤ 10V. Care must be taken to insure that the dissipation rating is not exceeded.

Electrical Characteristics (Triple/Quad)

(V_{SUPP} = ±1.0V, I_Q = 10µA, T_A = +25°C, unless otherwise noted.) (Specifications apply to ICL7631/7632/7642 only.)

PARAMETER	SYMBOL	CONDITIONS	ICL76XXB			ICL76XXC			UNITS
			MIN	TYP	MAX	MIN	TYP	MAX	
Input Offset Voltage	V_{OS}	R_S ≤ 100kΩ, T_A = +25°C			5			10	mV
		R_S ≤ 100kΩ, T_{MIN} ≤ T_A ≤ T_{MAX}			7			12	
Temperature Coefficient of V_{OS}	$\Delta V_{OS}/\Delta T$	R_S ≤ 100kΩ		15			20		µV/°C
Input Offset Current	I_{OS}	T_A = +25°C		0.5	30		0.5	30	pA
		0°C ≤ T_A ≤ +70°C			300			300	
Input Bias Current	I_{BIAS}	T_A = +25°C		1.0	50		1.0	50	pA
		0°C ≤ T_A ≤ +70°C			500			500	
Common-Mode Voltage Range	V_{CMR}		-0.4		+0.6	-0.4		+0.6	V
Output Voltage Swing	V_{OUT}	R_L = 1MΩ, T_A = +25°C		±0.98			±0.98		V
		R_L = 1MΩ, 0°C ≤ T_A ≤ +70°C		±0.96			±0.96		
Large-Signal Voltage Gain	A_{VOL}	V_O = ±0.1V, R_L = 1MΩ, T_A = +25°C		90			90		dB
		V_O = ±0.1V, R_L = 1MΩ, 0°C ≤ T_A ≤ +70°C		80			80		
Unity-Gain Bandwidth	GBW			0.044			0.044		MHz
Input Resistance	R_{IN}			10^{12}			10^{12}		Ω
Common-Mode Rejection Ratio	CMRR	R_S ≤ 100kΩ		80			80		dB

Electrical Characteristics (Triple/Quad) (continued)

(V_{SUPP} = ±1.0V, I_Q = 10µA, T_A = +25°C, unless otherwise noted.) (Specifications apply to ICL7631/7632/7642 only.)

PARAMETER	SYMBOL	CONDITIONS	ICL76XXB			ICL76XXC			UNITS
			MIN	TYP	MAX	MIN	TYP	MAX	
Power-Supply Rejection Ratio	PSRR			80			80		dB
Input-Referred Noise Voltage	e_n	R_S = 100Ω, f = 1kHz		100			100		nV/√Hz
Input-Referred Noise Current	i_n	R_S = 100Ω, f = 1kHz		0.01			0.01		pA/√Hz
Supply Current (Per Amplifier)	I_{SUPP}	No signal, no load		6	15		6	15	µA
Channel Separation	V_{O1} / V_{O2}	A_{VOL} = 100		120			120		dB
Slew Rate	SR	A_{VOL} = 1, C_L = 100pF, V_{IN} = 0.2V_{P-P}, R_L = 1MΩ		0.016			0.016		V/µs
Rise Time	t_r	V_{IN} = 50mV, C_L = 100pF, R_L = 1MΩ		20			20		µs
Overshoot Factor		V_{IN} = 50mV, C_L = 100pF, R_L = 1MΩ		5			5		%

Electrical Characteristics (Triple/Quad)

(V_{SUPP} = ±5.0V, T_A = +25°C, unless otherwise noted.)

PARAMETER	SYMBOL	CONDITIONS	ICL76XXB			ICL76XXC			ICL76XXE			UNITS
			MIN	TYP	MAX	MIN	TYP	MAX	MIN	TYP	MAX	
Input Offset Voltage	V_{OS}	R_S ≤ 100kΩ, T_A = +25°C			5			10			20	mV
		R_S ≤ 100kΩ, T_{MIN} ≤ T_A ≤ T_{MAX}			7			15			25	mV
Temperature Coefficient of V_{OS}	$\Delta V_{OS}/\Delta T$	R_S ≤ 100kΩ		15			20			30		µV/°C
Input Offset Current	I_{OS}	T_A = +25°C		0.5	30		0.5	30		0.5	30	pA
		C: 0°C ≤ T_A ≤ +70°C			300			300			300	pA
		M: -55°C ≤ T_A ≤ +125°C			800			800			800	pA
Input Bias Current	I_{BIAS}	T_A = +25°C		1.0	50		1.0	50		1.0	50	pA
		C: 0°C ≤ T_A ≤ +70°C			500			500			500	pA
		M: -55°C ≤ T_A ≤ +125°C			4000			4000			4000	pA

Electrical Characteristics (Triple/Quad) (continued)

(V_{SUPP} = ±5.0V, T_A = +25°C, unless otherwise noted.)

PARAMETER	SYMBOL	CONDITIONS		ICL76XXB			ICL76XXC			ICL76XXE			UNITS
				MIN	TYP	MAX	MIN	TYP	MAX	MIN	TYP	MAX	
Common-Mode Voltage Range	V_{CMR}	I_Q = 10µA (Note 7)		+4.4			+4.4			+4.4			V
				-4.0			-4.0			-4.0			
		I_Q = 100µA (Note 9)		+4.2			+4.2			+4.2			
				-4.0			-4.0			-4.0			
		I_Q = 1mA (Note 8)		+3.7			+3.7			+3.7			
				-3.7			-3.7			-3.7			
Output Voltage Swing	V_{OUT}	I_Q = 10µA, R_L = 1MΩ (Note 7)	T_A = +25°C	±4.9			Q4.9			Q4.9			V
			C: 0°C ≤ T_A ≤ +70°C	±4.8			±4.8			±4.8			
			M: -55°C ≤ T_A ≤ +125°C	±4.7			±4.7			±4.7			
		I_Q = 100µA, R_L = 100kΩ (Note 9)	T_A = +25°C	±4.9			±4.9			±4.9			
			C: 0°C ≤ T_A ≤ +70°C	±4.8			±4.8			±4.8			
			M: -55°C ≤ T_A ≤ +125°C	±4.5			±4.5			±4.5			
		I_Q = 1mA, R_L = 10kΩ (Note 8)	T_A = +25°C	±4.5			±4.5			±4.5			
			C: 0°C ≤ T_A ≤ +70°C	±4.3			±4.3			±4.3			
			M: -55°C ≤ T_A ≤ +125°C	±4.0			±4.0			±4.0			

Electrical Characteristics (Triple/Quad) (continued)

(V_{SUPP} = ±5.0V, T_A = +25°C, unless otherwise noted.)

PARAMETER	SYMBOL	CONDITIONS		ICL76XXB			ICL76XXC			ICL76XXE			UNITS
				MIN	TYP	MAX	MIN	TYP	MAX	MIN	TYP	MAX	
Large-Signal Voltage Gain	A_{VOL}	V_O = ±4.0V, R_L = 1MΩ, I_Q = 10µA (Note 7)	T_A = +25°C	86	104		80	104		80	104		dB
			C: 0°C ≤ T_A ≤ +70°C	80			75			75			
			M: -55°C ≤ T_A ≤ +125°C	74			68			68			
		V_O = ±4.0V, R_L = 100kΩ, I_Q = 100µA	T_A = +25°C	86	102		80	102		80	102		
			C: 0°C ≤ T_A ≤ +70°C	80			75			75			
			M: -55°C ≤ T_A ≤ +125°C	74			68			68			
		V_O = ±4.0V, R_L = 10kΩ (Note 8), I_Q = 1mA (Note 7)	T_A = +25°C	86	98		80	98		80	98		
			C: 0°C ≤ T_A ≤ +70°C	80			75			75			
			M: -55°C ≤ T_A ≤ +125°C	74			68			68			

Electrical Characteristics (Triple/Quad) (continued)

(V_{SUPP} = ±5.0V, T_A = +25°C, unless otherwise noted.)

PARAMETER	SYMBOL	CONDITIONS		ICL76XXB			ICL76XXC			ICL76XXE			UNITS
				MIN	TYP	MAX	MIN	TYP	MAX	MIN	TYP	MAX	
Unity-Gain Bandwidth	G_{BW}	I_Q = 10µA (Note 7)			0.044			0.044			0.044		MHz
		I_Q = 100µA (Note 9)			0.48			0.48			0.48		
		I_Q = 1mA (Note 8)			1.4			1.4			1.4		
Input Resistance	R_{IN}				10^{12}			10^{12}			10^{12}		Ω
Common-Mode Rejection Ratio	CMRR	R_S ≤ 100kΩ, I_Q = 10µA (Note 7)		76	96		70	96		70	96		dB
		R_S ≤ 100kΩ, I_Q = 100µA		76	91		70	91		70	91		
		R_S ≤ 100kΩ, I_Q = 1mA (Note 8)		66	87		60	87		60	87		
Power-Supply Rejection Ratio	PSRR	R_S ≤ 100kΩ, I_Q = 10µA (Note 7)		80	94		80	94		80	94		dB
		R_S ≤ 100kΩ, I_Q = 100µA		80	86		80	86		80	86		
		R_S ≤ 100kΩ, I_Q = 1mA (Note 8)		70	77		70	77		70	77		
Input-Referred Noise Voltage	e_n	R_S = 100Ω, f = 1kHz			100			100			100		nV/√Hz
Input-Referred Noise Current	i_n	R_S = 100Ω, f = 1kHz			0.01			0.01			0.01		pA/√Hz
Supply Current (Per Amplifier)	I_{SUPP}	No signal, no load	I_Q = 10µA (Note 7)		0.01	0.022		0.01	0.022		0.01	0.022	mA
			I_Q = 100µA		0.1	0.25		0.1	0.25		0.1	0.25	
			I_Q = 1mA (Note 8)		1.0	2.5		1.0	2.5		1.0	2.5	
Channel Separation	V_{O1} / V_{O2}	A_{VOL} = 100			120			120			120		dB
Slew Rate (Note 10)	SR	A_{VOL} = 1, C_L = 100pF, V_{IN} = $8V_{P-P}$	I_Q = 10µA (Note 7), R_L = 1MΩ		0.016			0.016			0.016		V/µs
			I_Q = 100µA, R_L = 100kΩ		0.16			0.16			0.16		
			I_Q = 1mA (Note 7), R_L = 10kΩ		1.6			1.6			1.6		

Electrical Characteristics (Triple/Quad) (continued)

(V_{SUPP} = ±5.0V, T_A = +25°C, unless otherwise noted.)

PARAMETER	SYMBOL	CONDITIONS		ICL76XXB			ICL76XXC			ICL76XXE			UNITS
				MIN	TYP	MAX	MIN	TYP	MAX	MIN	TYP	MAX	
Rise Time (Note 10)	t_r	V_{IN} = 50mV, C_L = 100pF	I_Q = 10µA (Note 7), R_L = 1MΩ		20			20			20		µs
			I_Q = 100µA, R_L = 100kΩ		2			2			2		
			I_Q = 1mA (Note 8), R_L = 10kΩ		0.9			0.9			0.9		
Overshoot Factor (Note 10)		V_{IN} = 50mV, C_L = 100pF	I_Q = 10µA (Note 7), R_L = 1MΩ		5			5			5		%
			I_Q = 100µA, R_L = 100kΩ		10			10			10		
			I_Q = 1mA (Note 8), R_L = 10kΩ		40			40			40		

Note 7: Does not apply to ICL7641.
Note 8: Does not apply to ICL7642.
Note 9: ICL7631/ICL7632 only.
Note 10: Does not apply to ICL7632.

Typical Operating Characteristics

(T_A = +25°C, unless otherwise noted.)

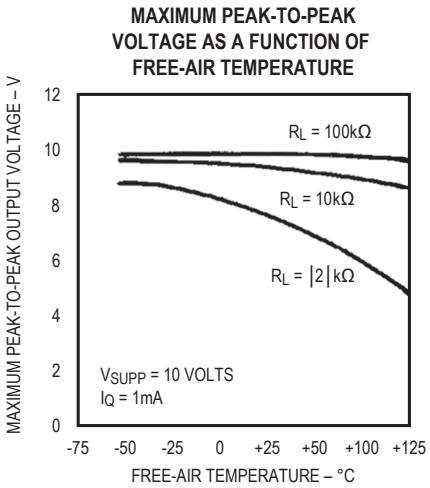

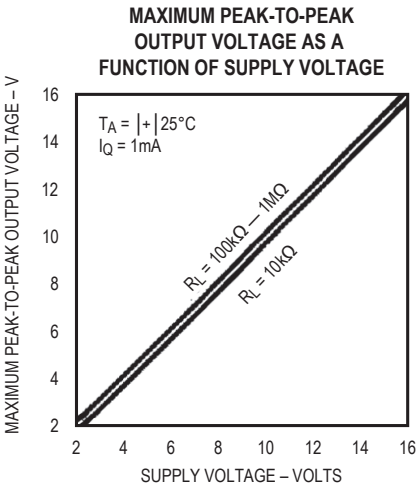

Typical Operating Characteristics (continued)

(T_A = +25°C, unless otherwise noted.)

SUPPLY CURRENT PER AMPLIFIER AS A FUNCTION OF SUPPLY VOLTAGE

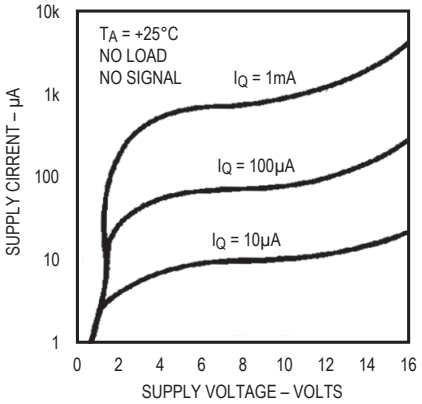

PEAK-TO-PEAK OUTPUT VOLTAGE AS A FUNCTION OF FREQUENCY

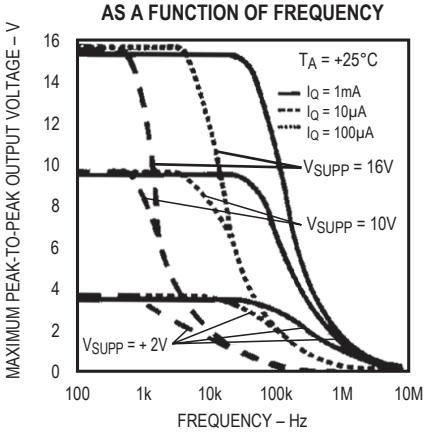

POWER SUPPLY REJECTION RATIO AS A FUNCTION OF FREE-AIR TEMPERATURE

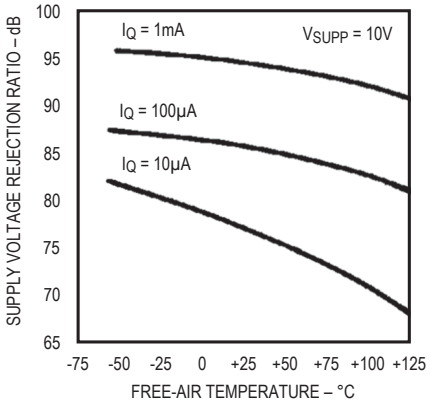

LARGE SIGNAL DIFFERENTIAL VOLTAGE GAIN AS A FUNCTION OF FREE-AIR TEMPERATURE

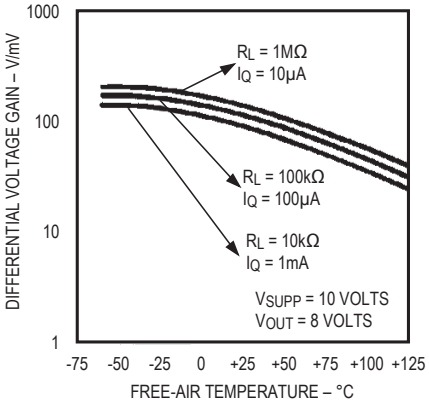

LARGE SIGNAL DIFFERENTIAL VOLTAGE GAIN AND PHASE SHIFT AS A FUNCTION OF FREQUENCY

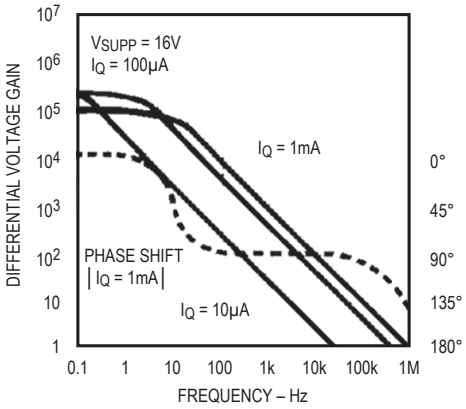

MAXIMUM OUTPUT SINK CURRENT AS A FUNCTION OF SUPPLY VOLTAGE

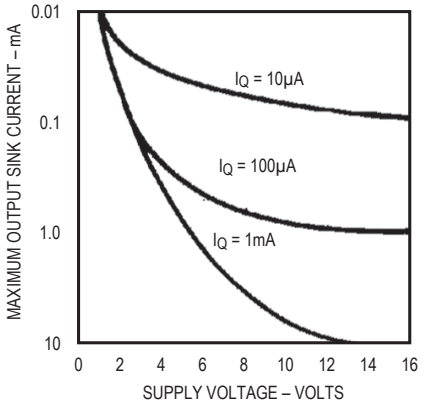

Typical Operating Characteristics (continued)

(T_A = +25°C, unless otherwise noted.)

INPUT BIAS CURRENT AS A FUNCTION OF TEMPERATURE

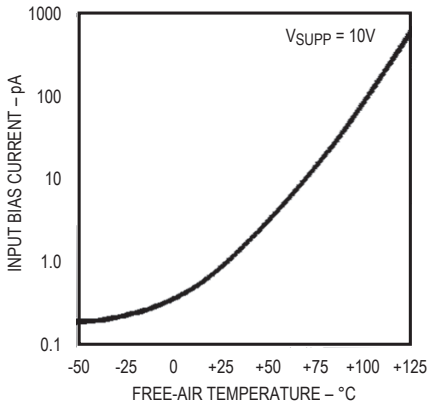

EQUIVALENT INPUT NOISE VOLTAGE AS A FUNCTION OF FREQUENCY

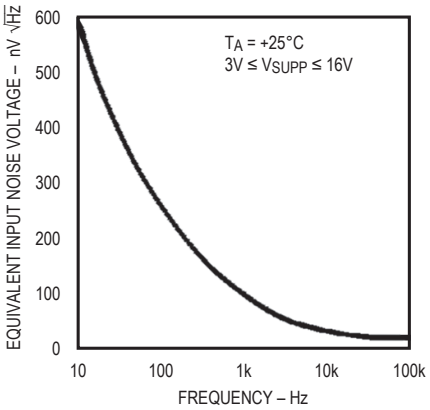

COMMON MODE REJECTION RATIO AS A FUNCTION OF FREE-AIR TEMPERATURE

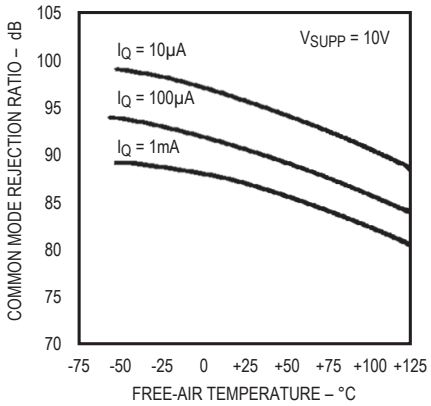

SUPPLY CURRENT PER AMPLIFIER AS A FUNCTION OF FREE-AIR TEMPERATURE

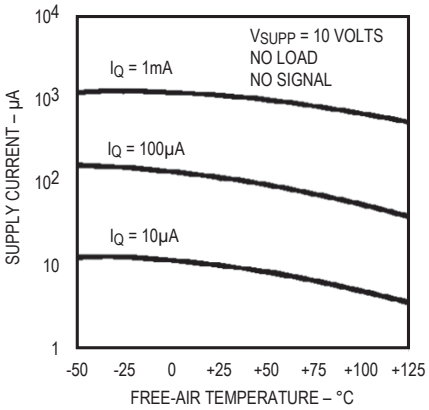

MAXIMUM PEAK-TO-PEAK OUTPUT VOLTAGE AS A FUNCTION OF LOAD RESISTANCE

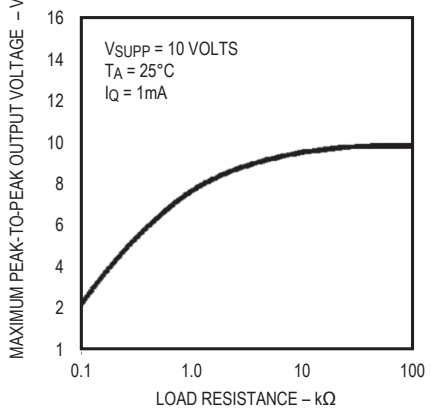

MAXIMUM OUTPUT/SOURCE CURRENT AS A FUNCTION OF SUPPLY VOLTAGE

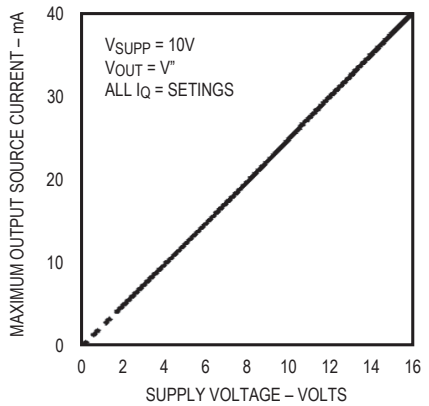

Typical Operating Characteristics (continued)

(T_A = +25°C, unless otherwise noted.)

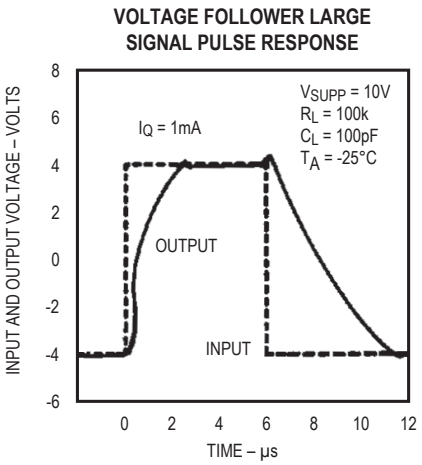

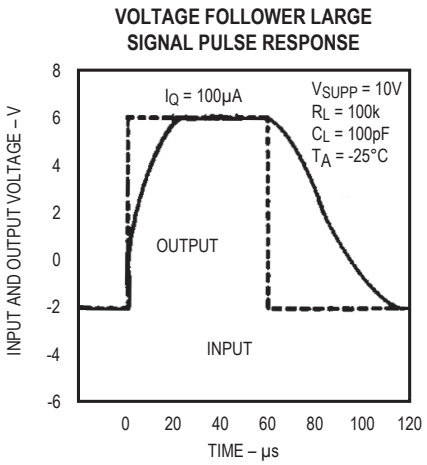

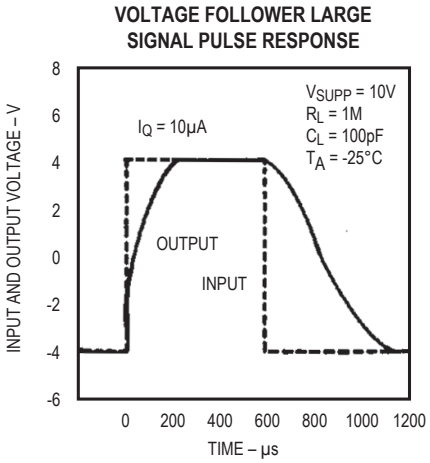

Detailed Description

Quiescent Current Selection

The voltage input to the I_Q pin of the single and triple amplifiers selects a quiescent current (I_Q) of 10µA, 100µA, or 1000µA. The dual and quad amplifiers have fixed quiescent current (I_Q) settings. Unity-gain bandwidth and slew-rate increase with increasing quiescent current, as does output sink current capability. The output source current capability is independent of quiescent current.

The lowest I_Q setting that results in sufficient bandwidth and slew rate should be selected for each specific application.

The I_Q pin of the single and triple amplifiers controls the quiescent current as follows:

I_Q = 10µA	I_Q pin to V+
I_Q = 100µA	I_Q pin between V- + 0.8V and V+ - 0.8V
I_Q = 1mA	I_Q pin to V

Input Offset Nulling

The input offset can be nulled by connecting a 25kΩ pot between the OFFSET terminals with the wiper connected to V+. At quiescent currents of 1mA and 100µA, the nulling range provided is adequate for all V_{OS} selections. However, with higher values of V_{OS}, and an I_Q of 10µA, nulling may not be possible.

Frequency Compensation

All of the ICL7611 and ICL7621 series except the ICL7614 are internally compensated for unity-gain operation. The ICL7614 is externally compensated by a capacitor connected between COMP and OUT pins, with 39pF being greater than unity. The compensation capacitor value may be reduced to increase the bandwidth and slew rate. The ICL7132 is not compensated and does not have frequency compensation pins. Use only at gains 20 at I_Q of 1mA; at gains > 10 at I_Q of 100µA; at gain > 5 at I_Q of 10µA.

Output Loading Considerations

Approximately 70% of the amplifier's quiescent current flows in the output stage. The output swing can approach the supply rails for output loads of 1MΩ, 100kΩ, and 10kΩ, using the output stage in a highly linear Class A mode. Crossover distortion is avoided and the voltage gain is maximized in this mode. The output stage, however, can also be operated in Class AB, which supplies higher output currents (see the *Typical Operating Characteristics*). The voltage gain decreases and the output transfer characteristic is non-linear during the transition from Class A to Class B operation.

The output stage, with a gain that is directly proportional to load impedance, approximates a transconductance amplifier. Approximately the same open-loop gains are obtained at each of the I_Q settings if corresponding loads of 10kΩ, 100kΩ, and 1MΩ are used.

The maximum output source current is higher than the maximum sink current, and is independent of I_Q.

Like most amplifiers, there are output loads for which the amplifier stability is not guaranteed. In particular, avoid capacitive loads greater than 100pF; and while on the 1mA I_Q setting, avoid loads less than 5kΩ. Since the output stage is a transconductance output, very large (>10µF) capacitive loads will create a dominant pole and the output will be stable, even with loads that are less than 5kΩ.

Extended Common-Mode Voltage Range (ICL7612/ICL7616)

A common-mode voltage range that includes both V+ and V- is often desirable, especially in single-supply operation. The ICL7612/ICL7616 extended common-mode range op amps are designed specifically to meet this need. The ICL7612 input common-mode voltage range (CMVR) extends beyond both power-supply rails when operated with at least 3V total supply and an I_Q of 10µA or 100µA. The ICL7616 CMVR includes the negative supply voltage (or ground when operated with a single supply) at an I_Q or 10µA or 100µA.

PC Board Layout

Careful PC board layout techniques must be used to take full advantage of the very low bias current of the ICL7611 family. The inputs should be encircled with a low-impedance trace, or guard, that is at the same potential as the inputs. In an inverting amplifier, this is normally ground; in a unity-gain buffer connect the guard to the output. A convenient way of guarding the 8-pin TO-99 version of the ICL7611 is to use a 10-pin circle, with the two extra pads on either side of the input pins to provide space for a guard ring (see Figure 8). Assembled boards should be carefully cleaned, and if a high humidity environment is expected, conformally coated.

Single-Supply Operation

The ICL7611 family will operate from a single 2V to 16V power supply. The common-mode voltage range of the standard amplifier types when operated from a single supply is 1.0V to (V+ - 0.6V) at 10µA I_Q. At 100µA I_Q, the CMVR is 1.0V to (V+ - 0.8V), and at 1mA I_Q, the CMVR is 1.3V to (V+ - 1.3V). If this CMVR range is insufficient, use the ICL7612, whose CMVR includes both ground and V+, or the ICL7616, whose CMVR includes ground.

A convenient way to generate a psuedo-ground at V+/2 is to use one op amp of a quad to buffer a V+/2 voltage from a high-impedance resistive divider.

Low-Voltage Operation

Operation at V_{SUPP} = ±1.0V is only guaranteed at I_Q = 10µA. Output swings to within a few millivolts of the supply rails are achievable for R_L (> or =) 1MΩ. Guaranteed input CMVR is ±0.6V minimum and typically +0.9V to -0.7V at V_{SUPP} = ±1.0V. For applications where greater common-mode range is desirable, see the description of ICL7612 and ICL7616 above.

Applications Information

Note that in no case is I_Q shown. The value of I_Q must be chosen by the designer with regard to frequency response and power dissipation.

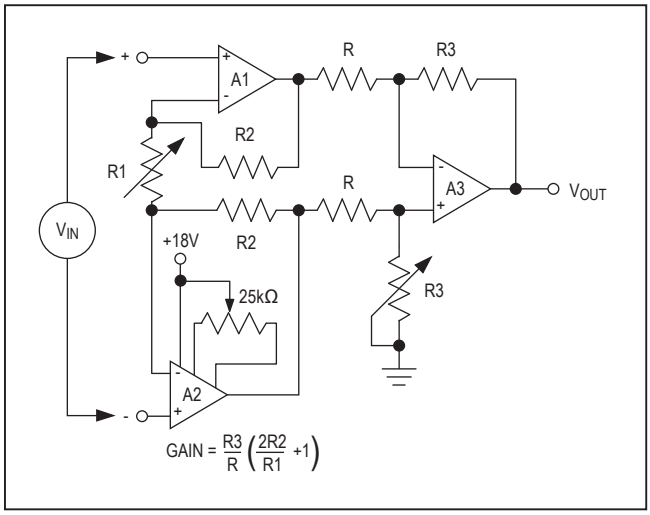

Figure 1. Instrumentation Amplifier—Adjust R3 to improve CMRR. The offset of all three amplifiers is nulled by the offset adjustment of A2.

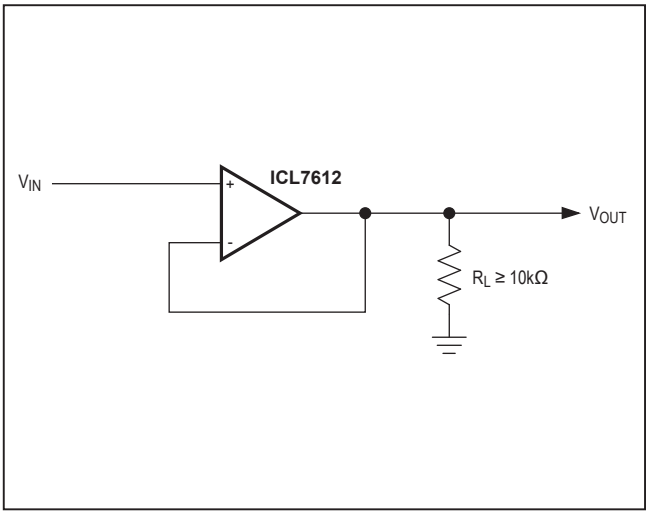

Figure 2. Simple Follower—By using the ICL7612 in these applications, the circuits will follow rail-to-rail inputs

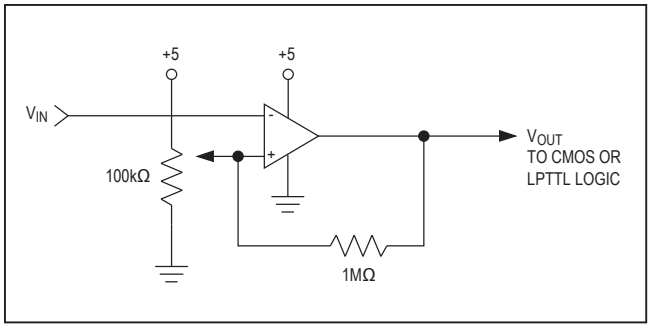

Figure 3. Level Detector—By using the ICL7612 in these applications, the circuits will follow rail-to-rail inputs.

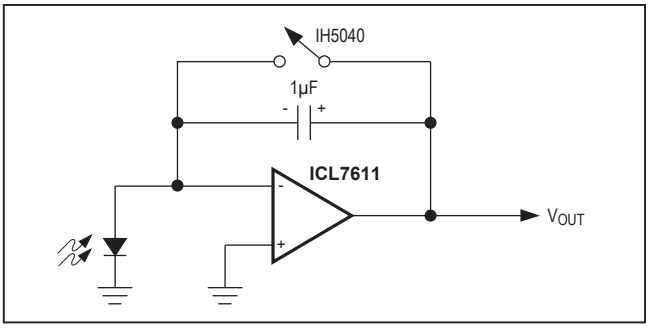

Figure 4. Photocurrent Integrator—Low-leakage currents allow integration times up to several hours.

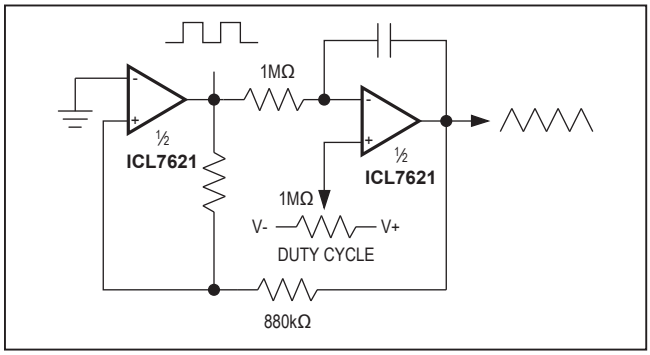

Figure 5. Precise Triangle/Square Wave Generator—The frequency and duty cycle are virtually independent of power supply.

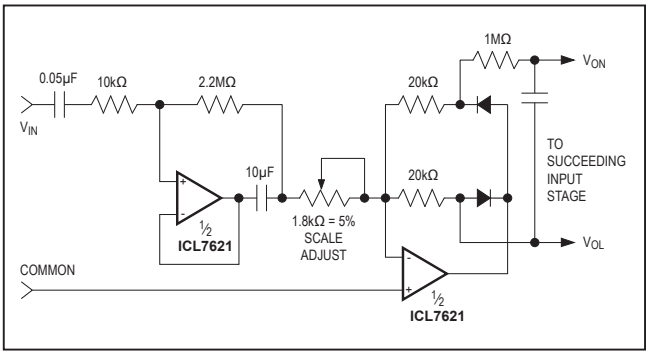

Figure 6. Averaging AC to DC Converter—Recommended for Maxim's ICL7106/ICL7107/ICL7109 A/D Converters.

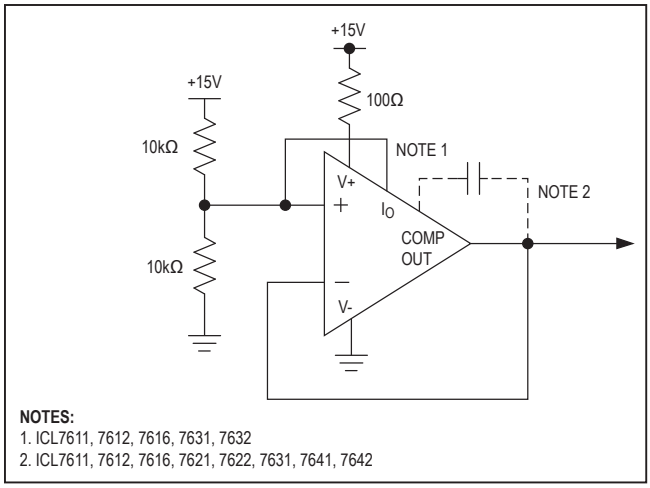

Figure 7. Burn-In and Life Test Circuit

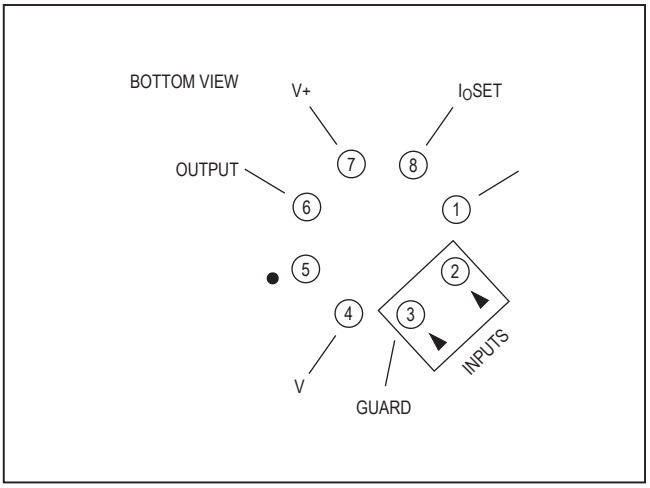

Figure 8. Input Guard for TO-99

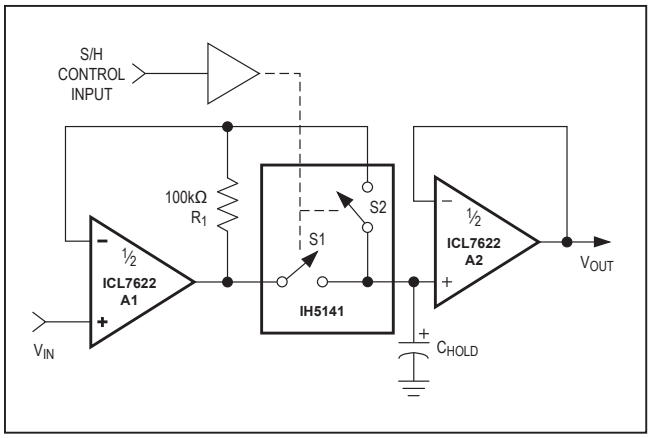

Figure 9. Low Droop Rate Sample and Hold—S2 improves accuracy and acquisition time by including the voltage drop across S1 inside the feedback loop. R1 closes the feedback loop of A1 during the hold phase. The droop rate is $[I_{BIAS(AZ)} + I_{LEAK(S1)} + I_{LEAK(S2)}]/C_{HOLD}$.

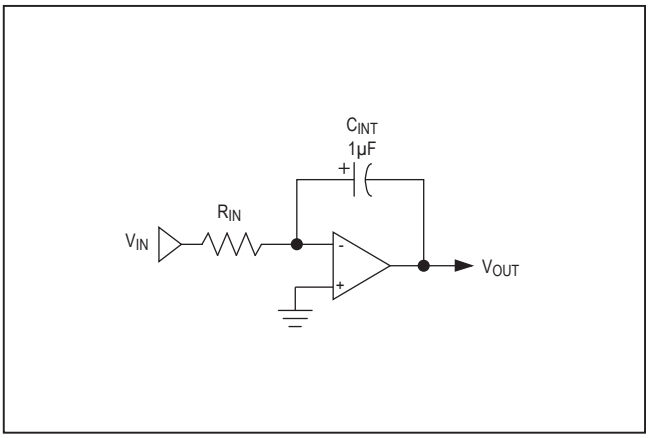

Figure 10. Long-Time Constant Integrator—With R_{IN} = 1011Ω, the time constant of this integrator is 100,000s. Since the input voltage is converted to a current by R_{IN}, the input voltage can far exceed the power-supply range.

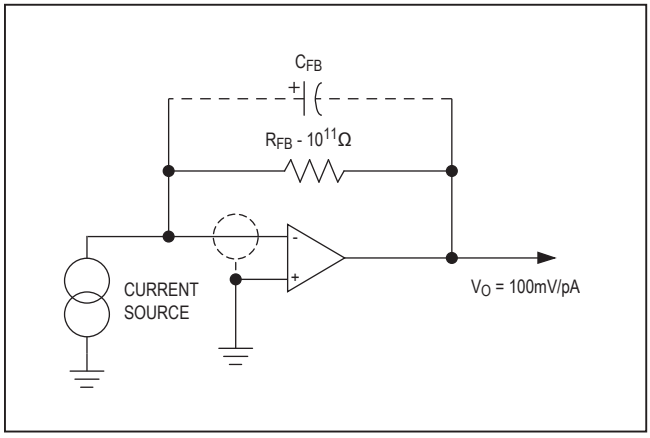

Figure 11. Pico Ammeter—The response time of this curcuit is R_{FB} x C_{FB}, where C_{FB} is the stray capacitance between the output and the inverting terminal of the amplifier.

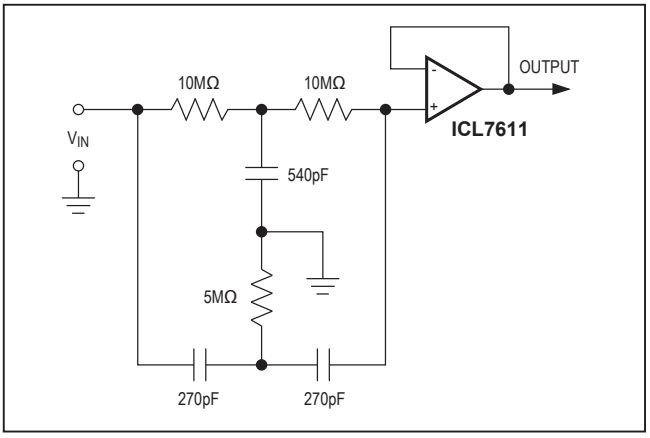

Figure 12. 60Hz Twin "T" Notch Filter—The low 1pA bias current of the ICL7611 allows use of small 540pF and 270pF capacitors, even with a notch frequency of 60Hz. The 60Hz rejection is approximately 40dB.

Typical Operating Circuit

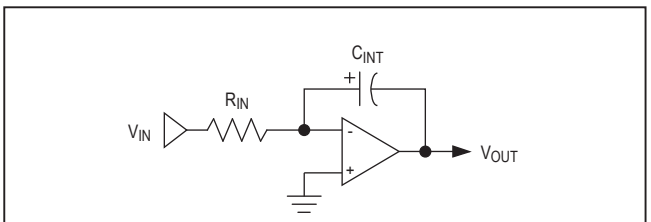

LONG TIME CONSTANT INTEGRATOR
(Detailed Circuit Diagram — Figure 10)

Chip Topographies

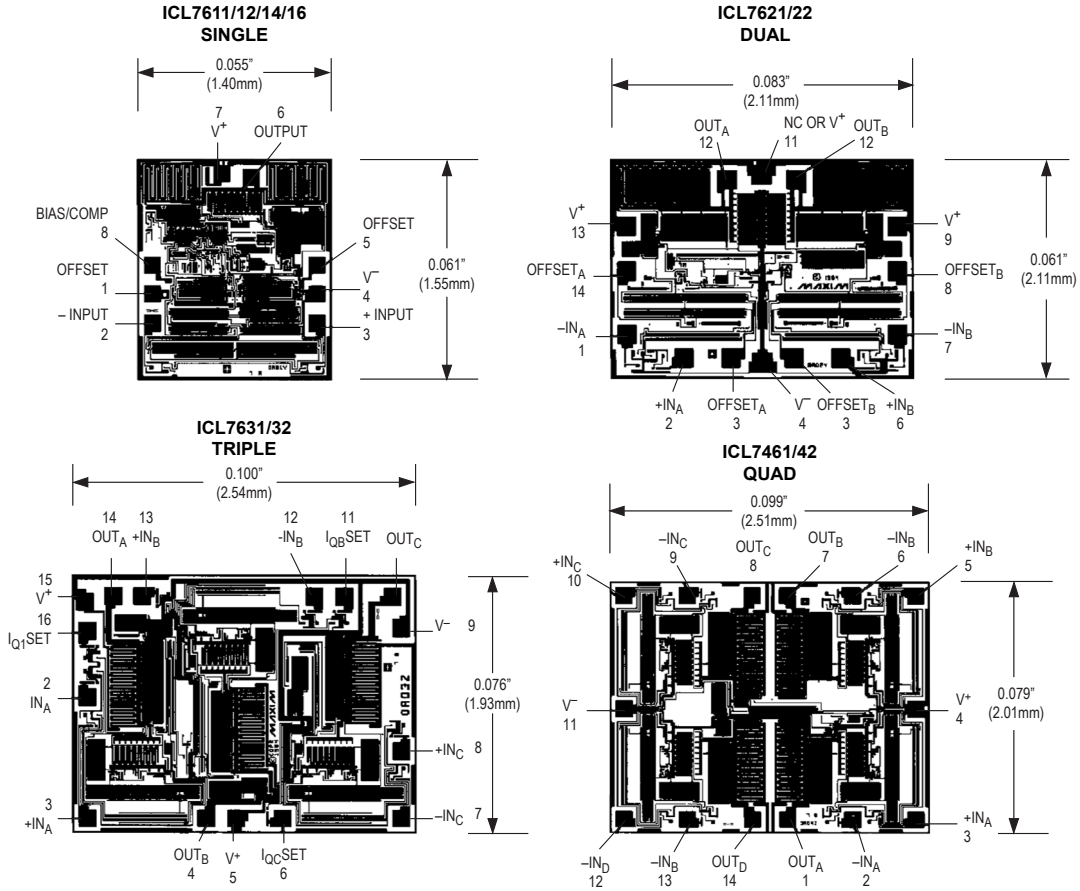

Package Information

For the latest package outline information and land patterns (footprints), go to **www.maximintegrated.com/packages**. Note that a "+", "#", or "-" in the package code indicates RoHS status only. Package drawings may show a different suffix character, but the drawing pertains to the package regardless of RoHS status.

PACKAGE TYPE	PACKAGE CODE	OUTLINE NO.	LAND PATTERN NO.
TO99	T99-8	21-0022	—
8 PDIP	P8-1	21-0043	—
8 SO	S8-2	21-0041	90-0096
8 CDIP	J16-3	21-0045	—
14 PDIP	P14-3	21-0043	—
14 CDIP	J14-3	21-0045	—
16 PDIP	P16-1	21-0043	—
16 SO	S16-1	21-0041	90-0097
16 Wide SO	W16-2	21-0042	90-0107

Revision History

REVISION NUMBER	REVISION DATE	DESCRIPTION	PAGES CHANGED
2	4/08	Removed all part numbers offered in die form from the Ordering Information	2, 11
3	5/10	Corrected letter grades in EC table headings	13–17
4	7/21	Added ICL7621DESA+ part number, temperature range and pin-package to Ordering Information, updated Package Information table.	1, 2, 25, 26

For pricing, delivery, and ordering information, please visit Maxim Integrated's online storefront at https://www.maximintegrated.com/en/storefront/storefront.html.

Maxim Integrated cannot assume responsibility for use of any circuitry other than circuitry entirely embodied in a Maxim Integrated product. No circuit patent licenses are implied. Maxim Integrated reserves the right to change the circuitry and specifications without notice at any time. The parametric values (min and max limits) shown in the Electrical Characteristics table are guaranteed. Other parametric values quoted in this data sheet are provided for guidance.

Maxim Integrated and the Maxim Integrated logo are trademarks of Maxim Integrated Products, Inc. © 2021 Maxim Integrated Products, Inc.