molex
one company › a world of innovation

This document was generated on 05/18/2010

PLEASE CHECK WWW.MOLEX.COM FOR LATEST PART INFORMATION

Part Number: 1040470490

Status: Active

Description: 2.00mm (.079") Pitch Wire-to-Board Crimp Housing, Single Row, 4 Circuits

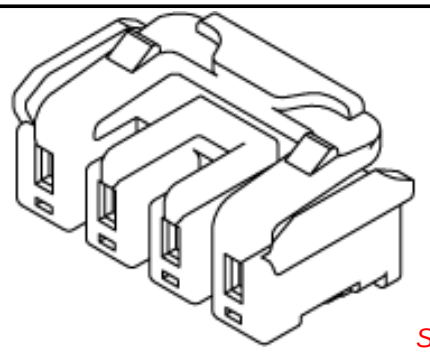

Series

image - Reference only

Documents:

3D Model
Drawing (PDF)
Product Specification PS-104046-001 (PDF)
RoHS Certificate of Compliance (PDF)

Agency Certification

UL	E29179

General

Product Family	Crimp Housings
Series	104047
Comments	for LED module
Product Name	N/A

Physical

Circuits (maximum)	4
Color - Resin	Natural
Flammability	94V-0
Gender	Receptacle
Glow-Wire Compliant	No
Keying to Mating Part	Yes
Lock to Mating Part	Yes
Number of Rows	1
Packaging Type	Bag
Panel Mount	No
Pitch - Mating Interface (in)	0.079 In
Pitch - Mating Interface (mm)	2.00 mm
Polarized to Mating Part	Yes
Temperature Range - Operating	-25°C to +135°C

Electrical

Current - Maximum per Contact	1A

Material Info

Reference - Drawing Numbers

Packaging Specification	PK-104047-002
Product Specification	PS-104046-001
Sales Drawing	SD-104047-001

EU RoHS
ELV and RoHS Compliant
REACH SVHC
Contains SVHC: No
Halogen-Free Status
Halogen-Free

China RoHS

Need more information on product environmental compliance?

Email productcompliance@molex.com
For a multiple part number RoHS Certificate of Compliance, click here

Please visit the Contact Us section for any non-product compliance questions.

Search Parts in this Series
104047Series

Mates With
104048 PCB Header

Use With
104466 Crimp Terminal

This document was generated on 05/18/2010

PLEASE CHECK WWW.MOLEX.COM FOR LATEST PART INFORMATION

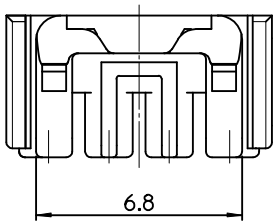

NOTES.
1. MATED WITH : 104046-0417
2. MATERIALS
   HOUSING : LIQUIDE CRYSTAL POLYMER(LCP), GLASS FILLED, UL94V-0
   COLOR OF NATURAL
3. APPLICABLE TERMINAL : 104466-8002

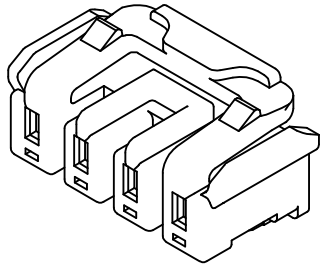

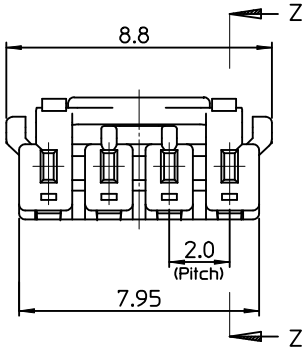

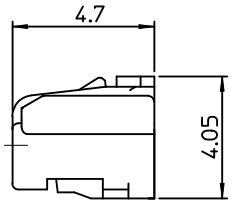

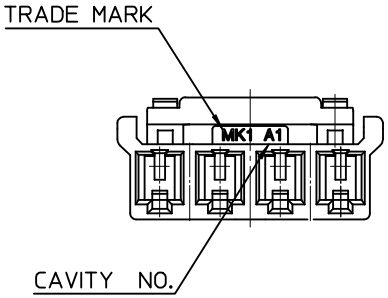

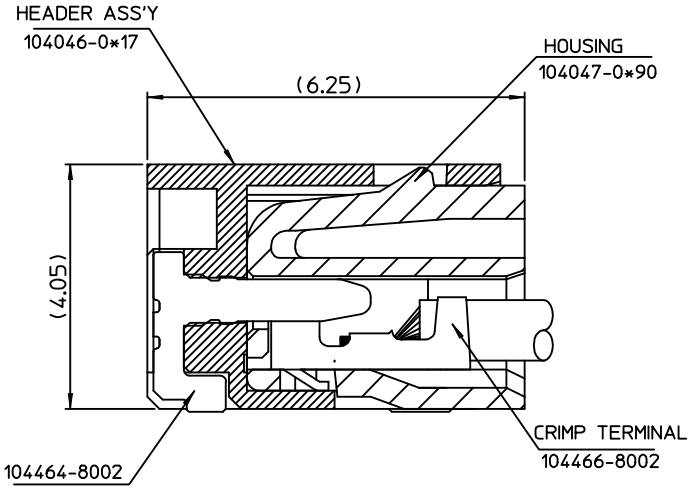

HEADER ASS'Y
(SCALE 12:1)

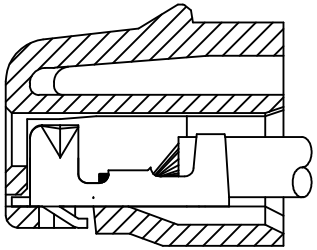

SECTION Z-Z
(SCALE 12:1)

NEW RELEASED EC NO: KOR2010-0066 DRWN:CBCHIN 2009/10/15 CH'KD:WYYANG 2009/10/20 APPR:YUNSIKKIM 2009/10/21	DESCRIPTION	QUALITY SYMBOLS ▼=0 C=0	GENERAL TOLERANCES (UNLESS SPECIFIED) mm / INCH 4 PLACES ± --- / ± --- 3 PLACES ± --- / ± --- 2 PLACES ± 0.20 / ± --- 1 PLACE ± 0.25 / ± --- ANGULAR ± 3 °	DIMENSION STYLE MM ONLY	SCALE 6:1	DESIGN UNITS METRIC	THIRD ANGLE PROJECTION
				DRAWN BY SK.HAN DATE 2009/03/11	TITLE 2.0 W-T-B CONN. HOSING-4P		
				CHECKED BY WY.YANG DATE 2009/03/11			
				APPROVED BY WY.YANG DATE 2009/03/11	molex MOLEX INCORPORATED		
A	REV		DRAFT WHERE APPLICABLE MUST REMAIN WITHIN DIMENSIONS	MATERIAL NO. 1040470490	DOCUMENT NO. SD-104047-001		SHEET NO. 1 OF 01
				SIZE A3	THIS DRAWING CONTAINS INFORMATION THAT IS PROPRIETARY TO MOLEX INCORPORATED AND SHOULD NOT BE USED WITHOUT WRITTEN PERMISSION		