PASTERNACK®
www.pasternack.com

MHV Female Connector Crimp/Solder Attachment For RG59, RG62

TECHNICAL DATA SHEET PE44103

MHV Female Connector Crimp/Solder Attachment For RG59, RG62

Configuration

Connector	MHV Female
Connector Specification	MIL-C-39012
Connector Interface Type	RG59,RG62
Cable Attachment Method (Shield/Contact)	Crimp/Solder
Body Style	Straight

Electrical Specifications

Impedance, Ohms	50

Mechanical Specifications

Temperature

Operating Range, deg C	-65 to +165

Size

Length, in [mm]	1.5 [38.1]
Width/Dia., in [mm]	0.5 [12.70]
Weight, lbs [g]	0.027 [12.25]

Connector

Type	MHV Female
Contact Material and Plating	Silver
Contact Plating Specification	QQ-S-365
Body Material and Plating	Brass, Nickel
Dielectric Type	Teflon

Compliance Certifications (visit www.Pasternack.com for current document)

RoHS Compliant	Yes

Plotted and Other Data

Notes:	Values at 25 °C, sea level

MHV Female Connector Crimp/Solder Attachment For RG59, RG62 from Pasternack Enterprises has same day shipment for domestic and International orders. Our RF, microwave and fiber optic products maintain a 99% availability and are part of the broadest selection in the industry.

Click the following link (or enter part number in “SEARCH” on website) to obtain additional part information including price, inventory and certifications: MHV Female Connector Crimp/Solder Attachment For RG59, RG62 PE44103

URL: http://www.pasternack.com/mhv-female-standard-rg59-rg62-connector-pe44103-p.aspx

The information contained in this document is accurate to the best of our knowledge and representative of the part described herein. It may be necessary to make modifications to the part and/or the documentation of the part, in order to implement improvements. Pasternack reserves the right to make such changes as required. Unless otherwise stated, all specifications are nominal.

Pasternack Enterprises, Inc. • P.O. Box 16759, Irvine, CA 92623
Phone: (866) 727-8376 or (949) 261-1920 • **Fax:** (949) 261-7451
Sales@Pasternack.com • Techsupport@Pasternack.com

ISO 9001 : 2008 Registered

© 2013 Pasternack Enterprises All Rights Reserved

PE44103 CAD Drawing

MHV Female Connector Crimp/Solder Attachment For RG59, RG62

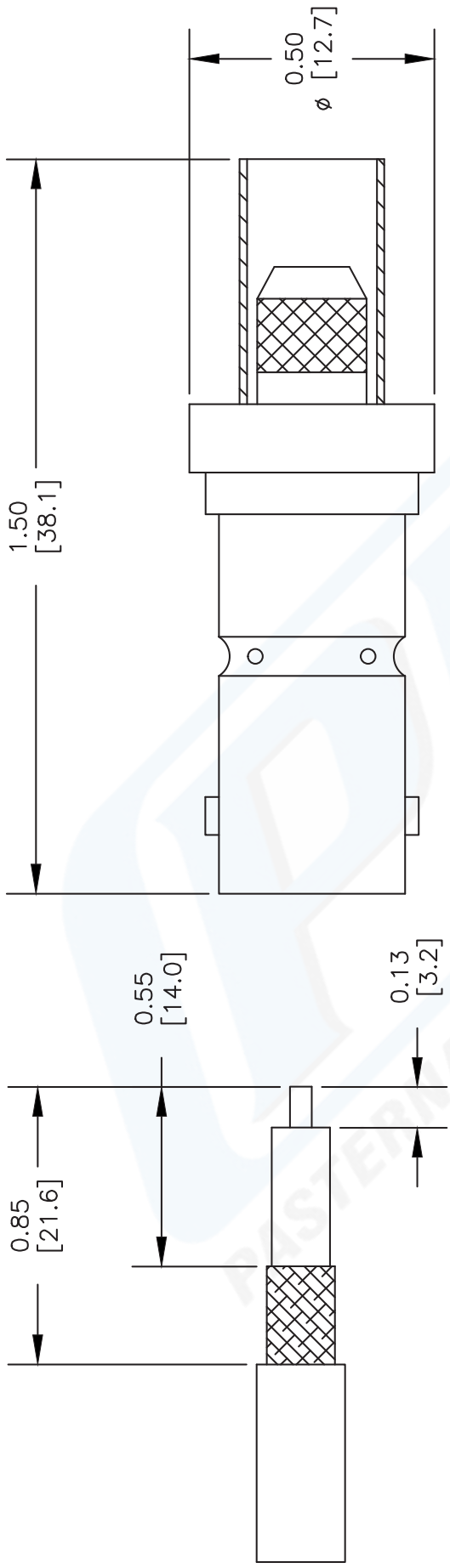

STRIPPING DIMENSIONS

CRIMP SIZE REQUIRED

CONTACT: SOLDER
FERRULE: .255" HEX CRIMP TOOL

NOTE: RG62 USES PTFE INSERT.
INSERT PTFE BEFORE
CONTACT. TAPER END FIRST.

NOTES:
1. UNLESS OTHERWISE SPECIFIED ALL DIMENSIONS ARE NOMINAL.
2. ALL SPECIFICATIONS ARE SUBJECT TO CHANGE WITHOUT NOTICE AT ANY TIME.
3. DIMENSIONS ARE IN INCHES [mm].
4. FITS MIL-C-17 AND EQUIVALENT CABLES.

DWG TITLE PE44103	CAD FILE 062502	SCALE N/A	SIZE A	127
FSCM NO. 53919			

PASTERNACK®
Pasternack Enterprises, Inc.
P.O. Box 16759 | Irvine | CA | 92623
Phone: (949) 261-1920 | **Fax:** (949) 261-7451
Website: www.pasternack.com | **E-Mail:** sales@pasternack.com

© 2013 Pasternack Enterprises All Rights Reserved