RFCA8830

High Linearity, Low Noise, 19dB Gain Block

Product Overview

The RFCA8830 is a GaAs pHEMT RF balanced amplifier IC with a 45 MHz to 1218 MHz operating bandwidth. This IC is designed to provide a low noise, high linearity, and high gain for use as a Post Amplifier in Optical Receivers or low noise balanced preamp. The IC uses a 5V power supply for applications requiring lower power dissipation. It is designed to support the new DOCSIS 3.1 Data Over Cable specification.

SOIC-8 with Exposed Pad

Functional Block Diagram

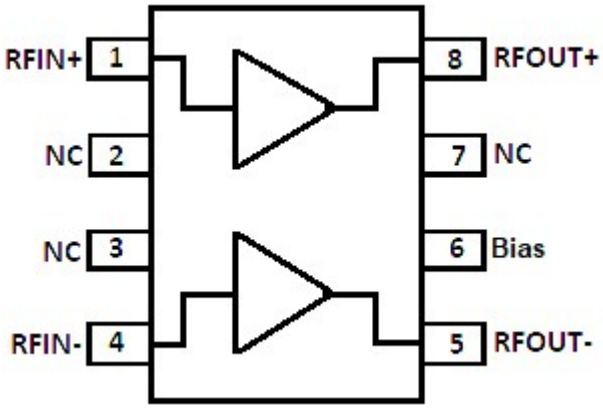

Key Features

- 45 MHz to 1218 MHz Operation
- 5 V Operation
- >75 dBc CSO and CTB at 34 dBmV/ch
- 19 dB Gain
- Low Noise Figure: >2 dB

Applications

- HFC Optical Nodes
- Balanced Antenna Applications
- DOCSIS 3.1 Systems

Ordering Information

Part Number	Description
RFCA8830SQ	Sample bag with 25 pieces
RFCA8830SR	7" Reel with 100 pieces
RFCA8830TR13	13" Reel with 2500 pieces
RFCA8830PCK401	45 – 1200 MHz PCBA with 5 pc sample bag

Absolute Maximum Ratings

Parameter	Rating
Supply Voltage (V_{DD})	+7 V
Maximum CW Input Power for VDD=5V	+4 dBm
Operating Temperature Range	-40 to +85 °C
Storage Temperature Range	−40 to +150 °C

Exceeding any one or a combination of the Absolute Maximum Rating conditions may cause permanent damage to the device. Extended application of Absolute Maximum Rating conditions to the device may reduce device reliability.

Electrical Specifications

Test conditions unless otherwise noted: V_{CC} =+5V, Temp= +25°C, 75Ω System.

Parameter	Conditions	Min	Typ	Max	Units
Operating Frequency Range		45		1218	MHz
Small Signal Gain	50 MHz		19.4		dB
	600 MHz		19.2		dB
	1200 MHz		18.7		dB
Gain Flatness			±0.5		dB
Input Return Loss	50 MHz		-20		dB
	600 MHz		-18		dB
	1200 MHz		-16		dB
Output Return Loss	50 MHz		-19		dB
	600 MHz		-16		dB
	1200 MHz		-15		dB
Noise Figure (Balun Insertion Loss Included)	500 MHz		1.8		dB
	1200 MHz		2.5		dB
Output P1dB	600 MHz		24		dBm
Output IP3	50 MHz, IM spacing 6 MHz, P_{OUT} = 5 dBm per tone		41		dBm
	600 MHz		40		dBm
	1200 MHz		39		dBm
Output IP2	50 MHz, IM spacing 30 MHz, P_{OUT} = 0 dBm per tone		80		dBm
	600 MHz		67		dBm
	1200 MHz		67		dBm
CSO	79 Channel, Flat tilt, +34 dBmV/ch		-85		dBc
CTB	79 Channel, Flat tilt, +34 dBmV/ch		-77		dBc
XMOD	79 Channel, Flat tilt, +34 dBmV/ch		-63		dBc
Supply Voltage (V_{DD})		4.5	5	5.5	V
Device Operating Current	5 V V_{DD}		280		mA
Thermal Resistance (Junction to Reference)	Reference is measured on the backside of PCB under IC		41		°C/W

Typical Application Schematic

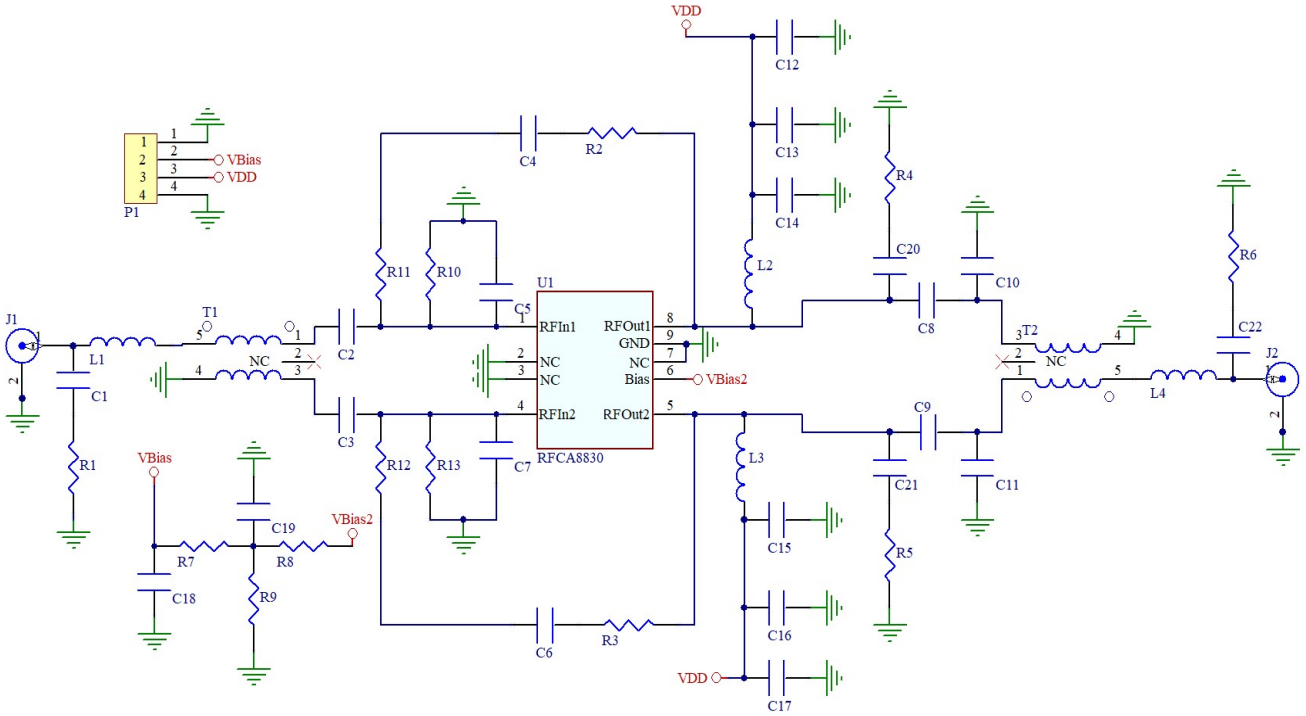

Bill of Materials (BOM) 45 MHz – 1200 MHz

Description	Designator	Manufacturer	Part Number
Push-Pull Amp, G=19 dB IP3=44 dBm SOIC	U1		RFCA8830SB
PCB, RFCA8830	PCB		CA8830-4000(A)
CAP, 1000pF, 5%, 50 V, C0G, 0603	C13, C16	Murata Electronics-Singapore	GRM1885C1H102JA01D
CAP, 0.9pF, +/-0.05pF, 50V, 0402	C1, C22	Murata Electronics-Singapore	GJM1555C1HR90WB01D
CAP, 1000pF, 5%, 50 V, C0G, 0402	C4, C6	Murata Electronics-Singapore	GRM1555C1H102JA01D
CAP, 470 pF, 5%, 50 V, C0G, 0603	C2, C3, C8, C9	Murata Electronics-Singapore	GRM1885C1H471JA01D
CAP, 1.8pF, +/-0.1pF, 16V, 0402	C20, C21	TAIYO YUDEN	RV EVK105 CH1R8BW-F
CAP, 1µF, 10%, 16 V, X7R, 0603	C12, C17	Murata Electronics-Singapore	GRM188R71C105KA12D
CAP, 100 pF, 5%, 50 V, C0G, 0603	C14, C15	Murata Electronics-Singapore	GRM1885C1H101JA01D
IND, 560nH, 5%, 550 mA, W/W, 0603	L2, L3	CoilCraft, Inc.	0603LS-561XJLB
IND, 5.6nH, +/- 0.1nH, 0402	L1	Murata Electronics-Singapore	LQP15MN5N6S02D
IND, 4.7nH, +/- 0.1nH, 0402	L4	Murata Electronics-Singapore	LQP15MN4N7B02D
RES, 430Ω, 1%, 1/10W, 0402	R2, R3	Panasonic Industrial Devices	ERJ-2RKF4300X
RES, 806Ω, 1%, 1/10W, 0402	R8	Panasonic Industrial Devices	ERJ-2RKF8060X
RES, 100Ω, 1%, 1/10W, 0402	R11, R12	Panasonic Industrial Devices	ERJ-2RKF1000X
RES, 15Ω, 1%, 0402	R4, R5	Kamaya, Inc	RMC1/16S-150FTH
RES, 0Ω, 0402	R1, R6, R9	Kamaya, Inc	RMC1/16SJPTH
XFMR, 1:1, 4.5-3000MHz, 75 Ω, SMD	T1, T2	MACOM	MABACT0059
CONN, HDR, ST, 4-PIN, 0.100”	P1	SAMTEC INC.	TSW-104-08-S-S
CONN, F FEM EDGE MOUNT, 75 Ω, 0.068"	J1, J2	Millimeter Wave Tech, LLC	MW-846-C-DD-75
HEATSINK BLOCK, 1.5 X 2.0 IN		Shenzhen Minxingda Automation	EEF-105441
SCREW, 2-56 X 3/16", SOCKET HEAD	S1-S4	McMaster-Carr Supply Co.	92196A076
DNP	R7, R10, R13, C5, C7, C10, C11, C18, C19	Not Populated Item	Dummy Part

Evaluation Board Assembly Drawing

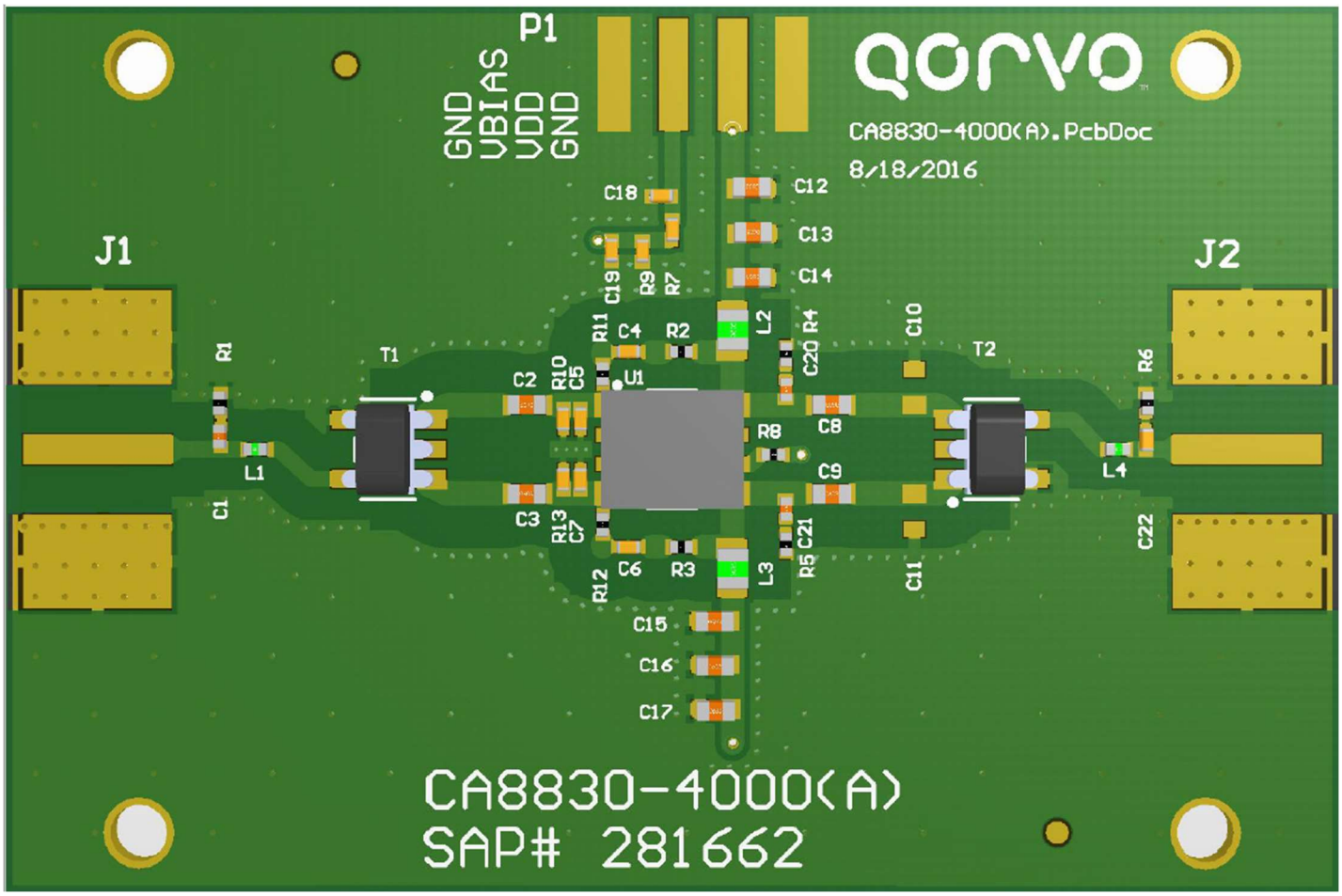

Performance Plots

Test conditions unless otherwise noted: V_{DD} =+5 V, Temp= +25 °C

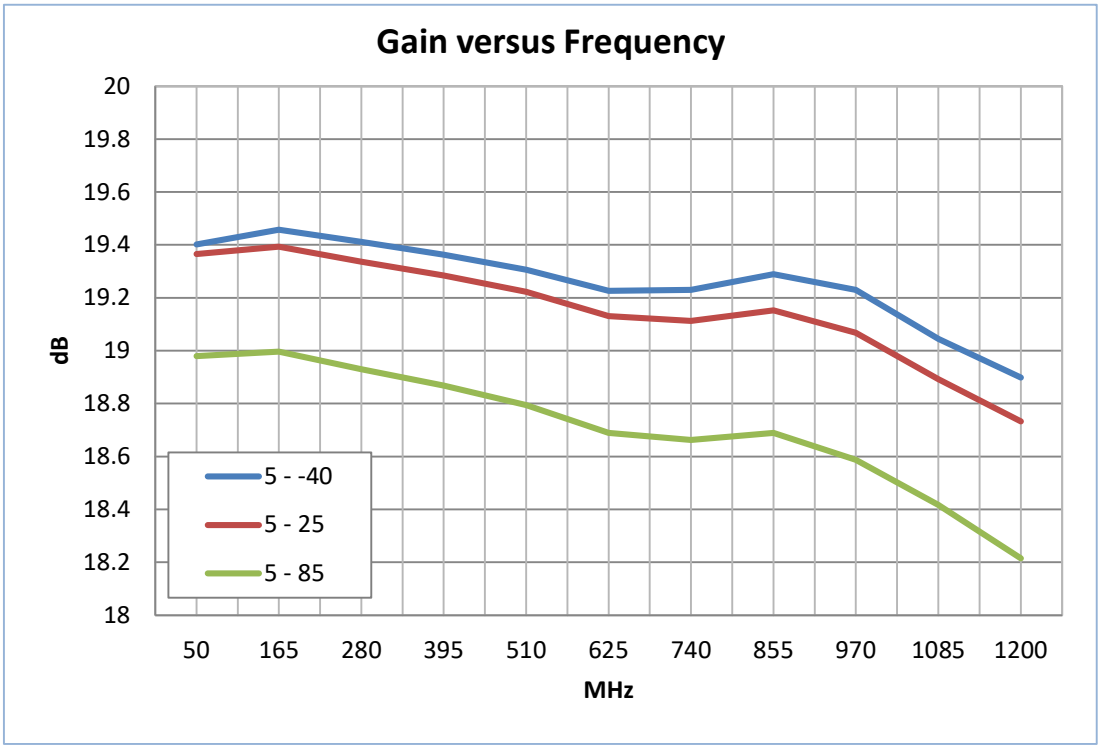

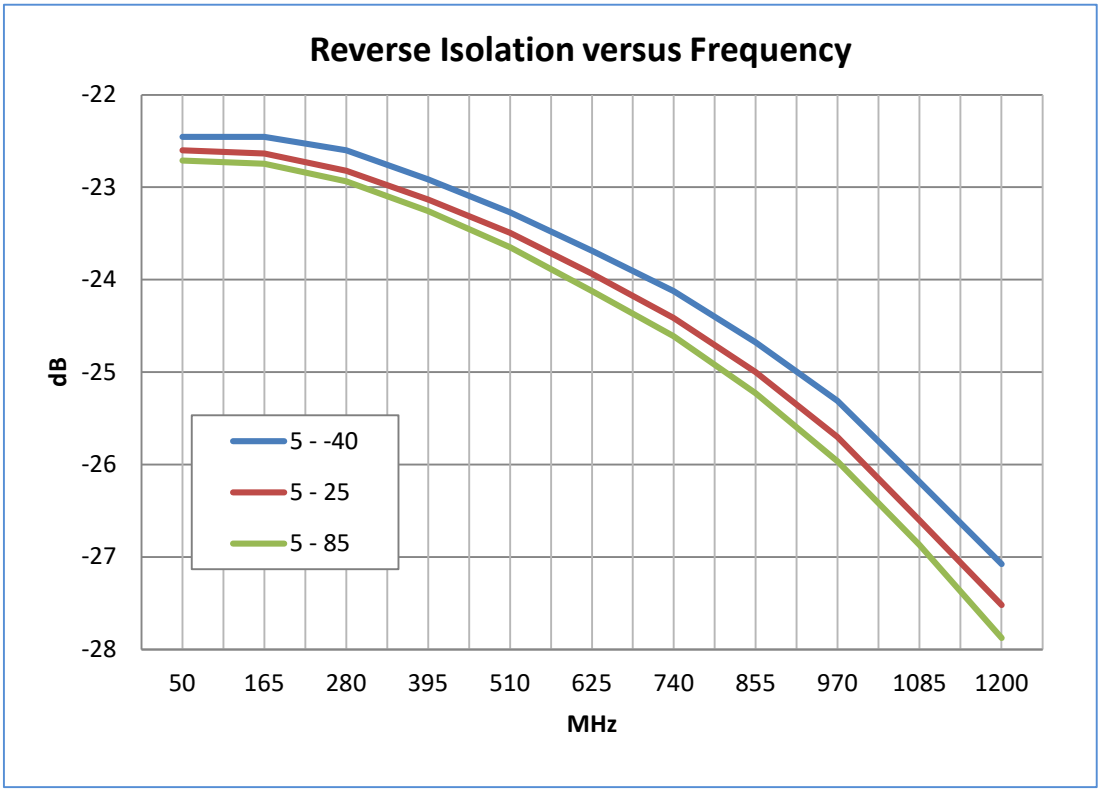

Performance Plots

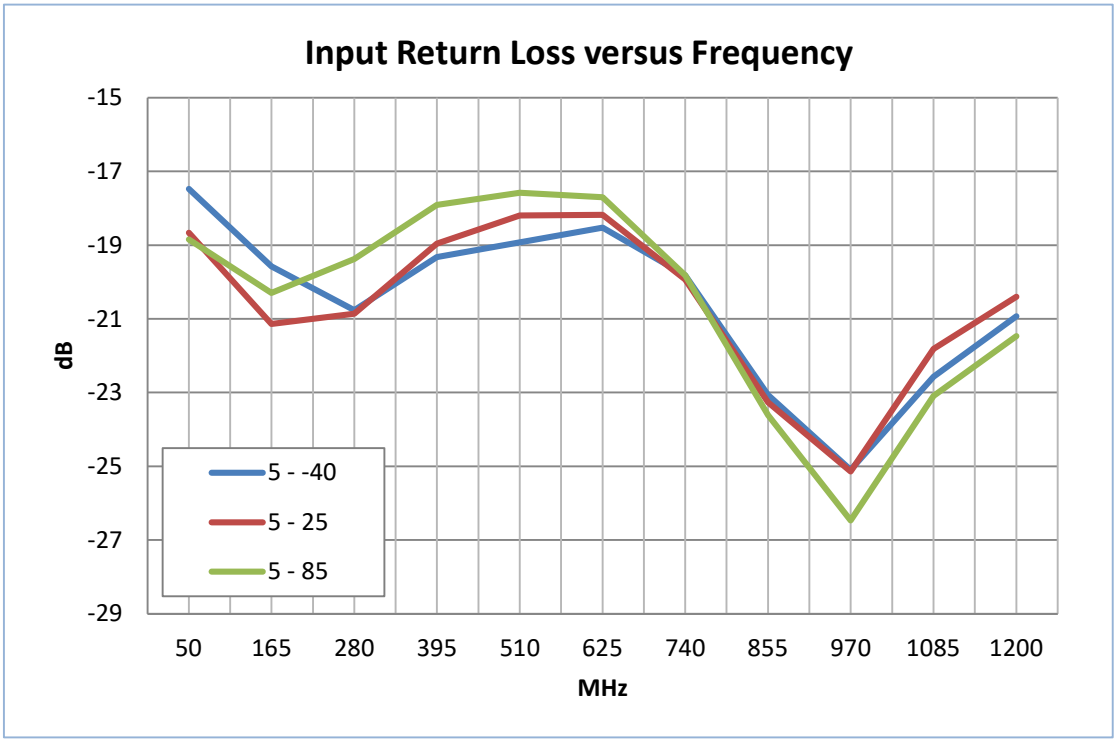

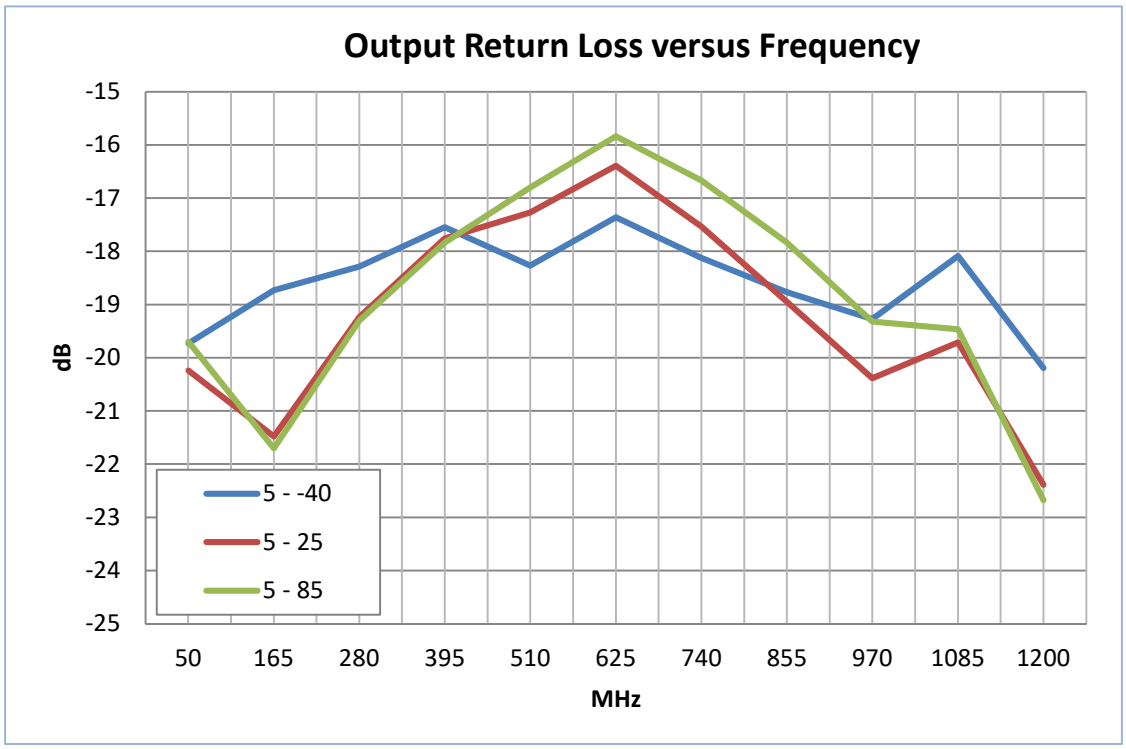

Performance Plots

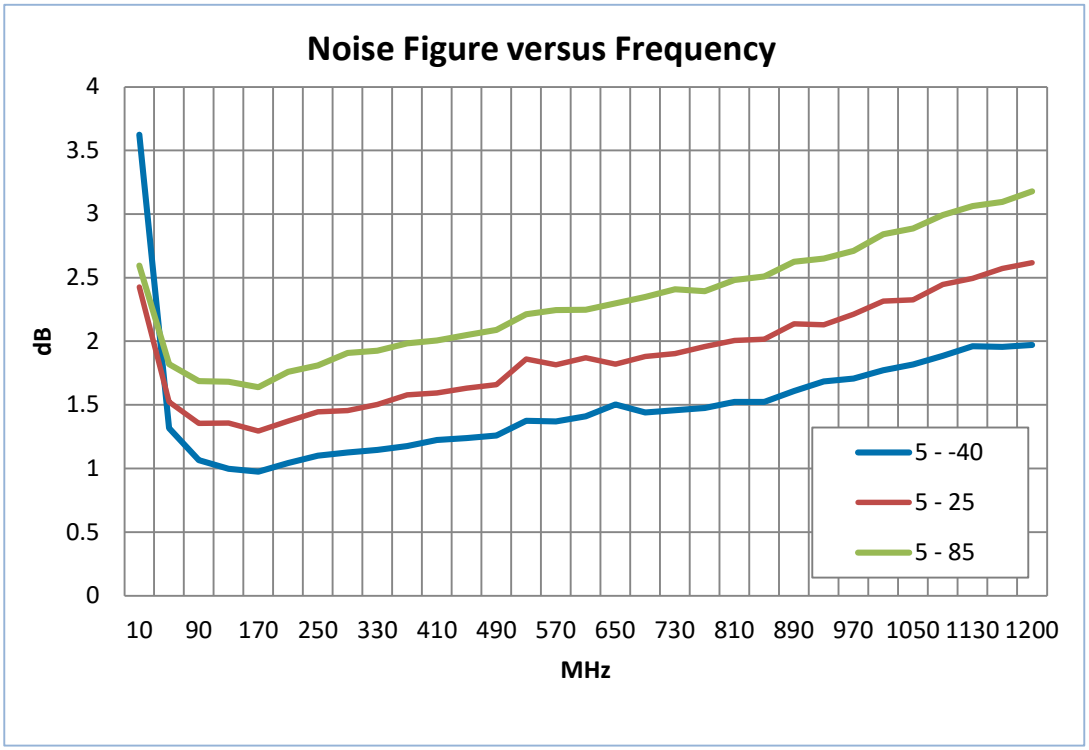

Performance Plots

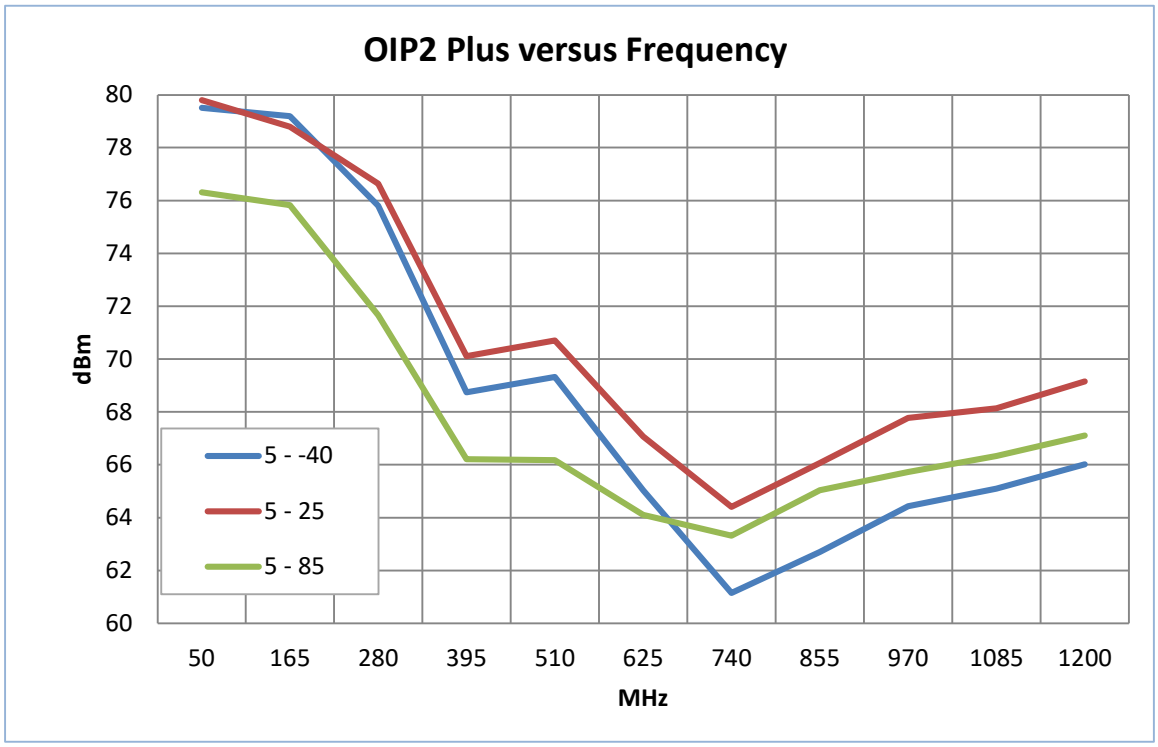

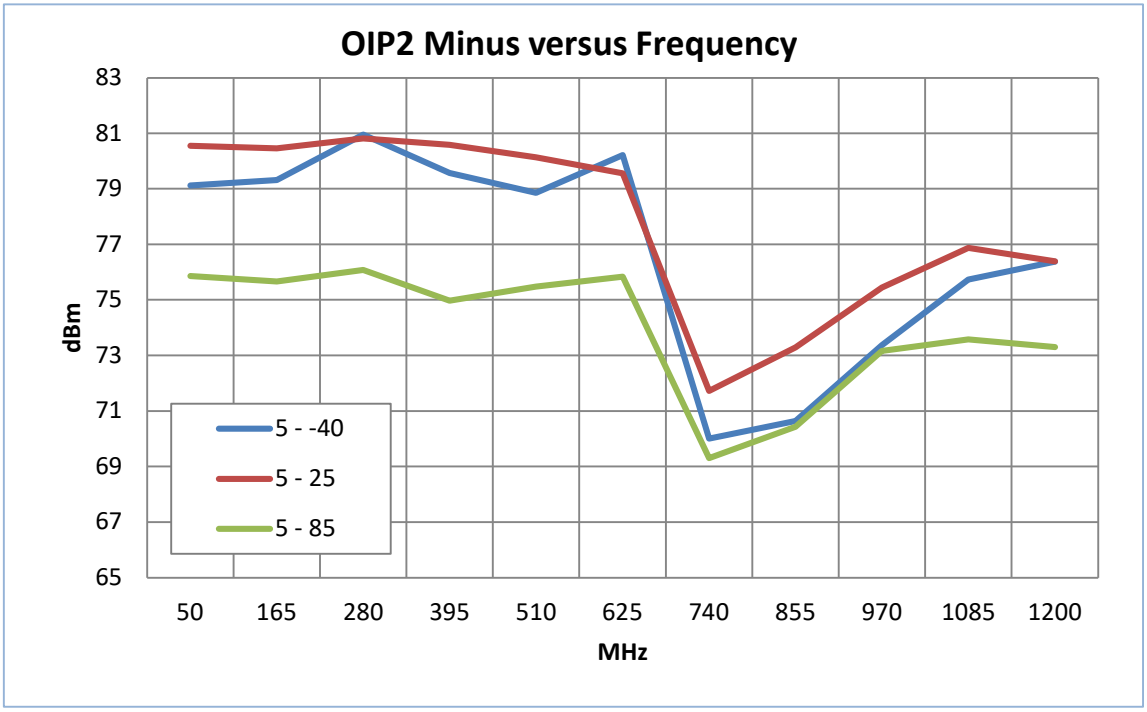

Performance Plots

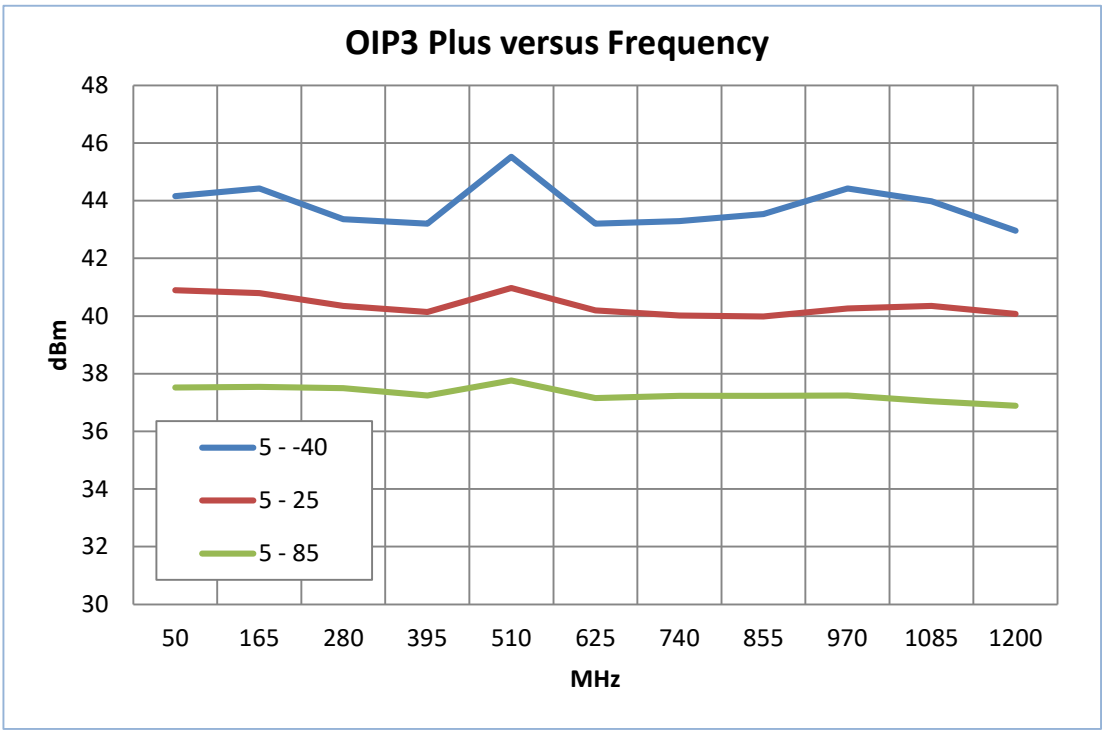

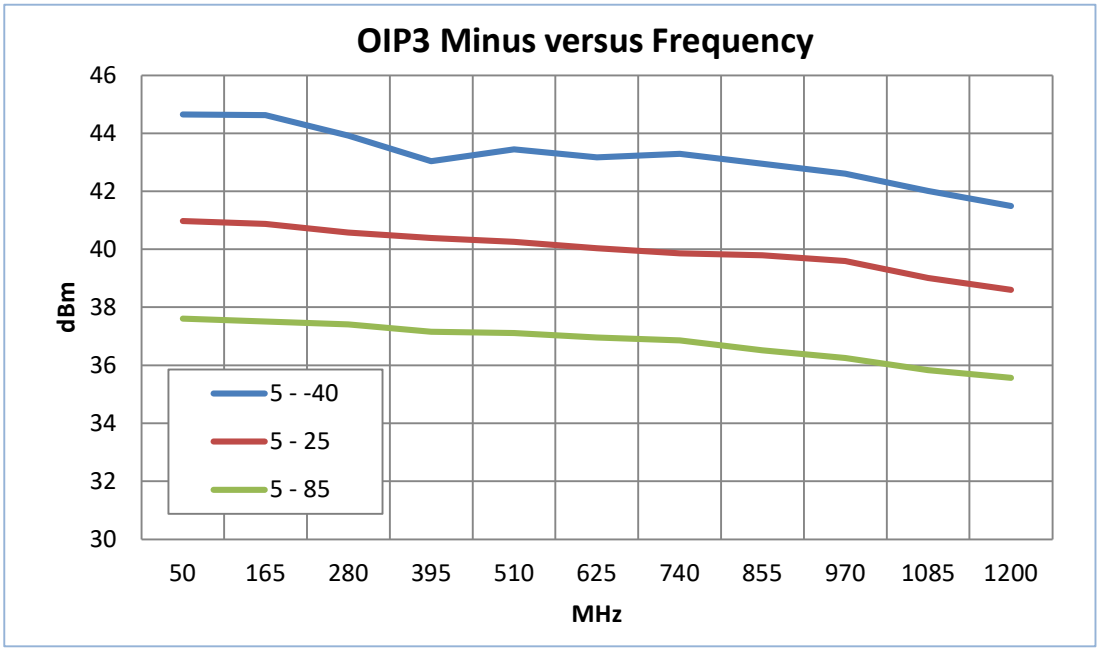

Performance Plots

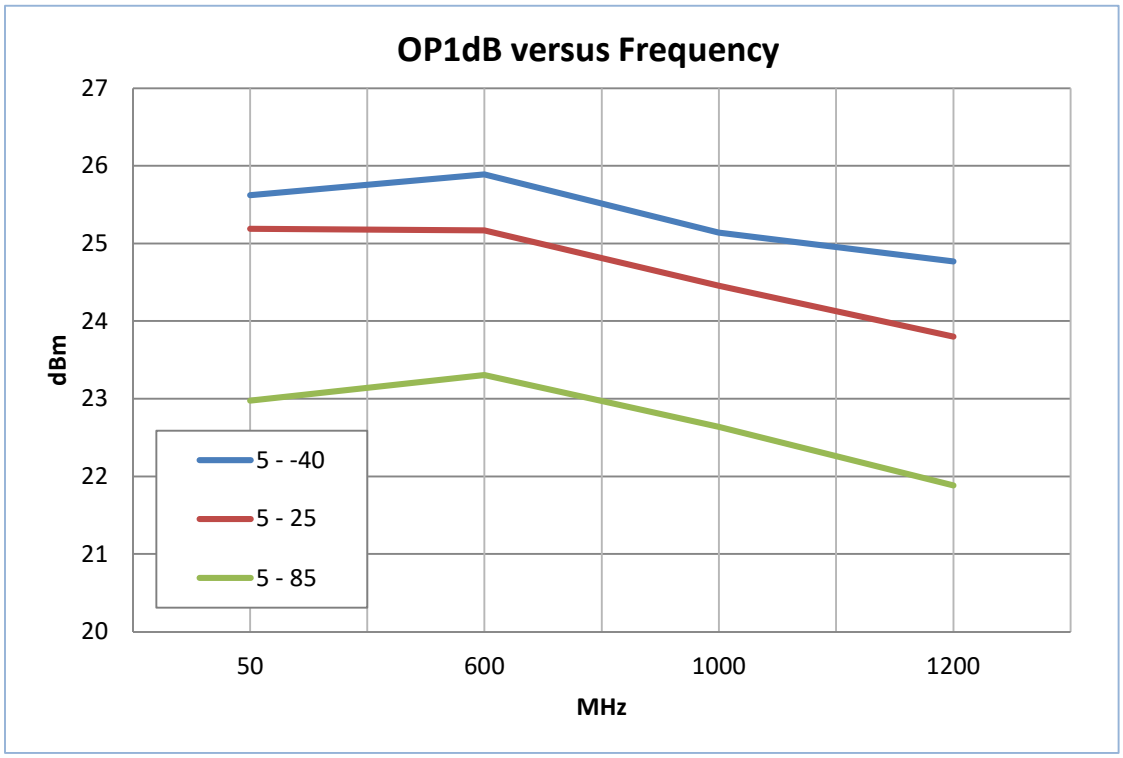

Performance Plots

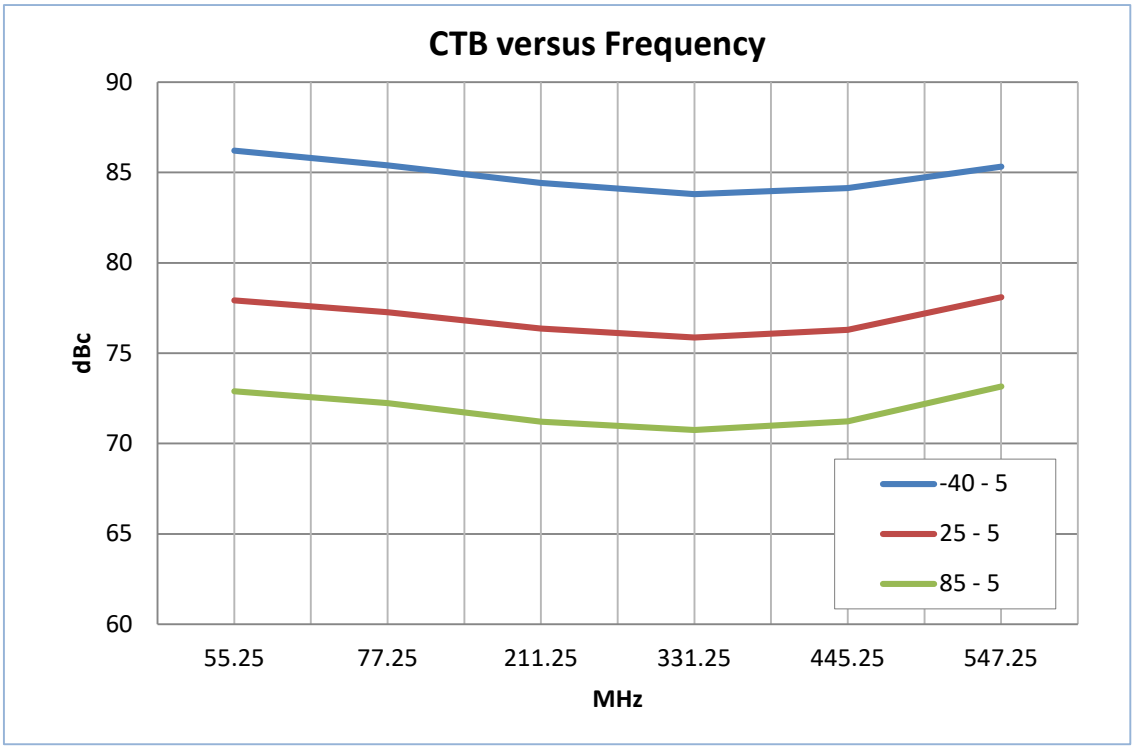

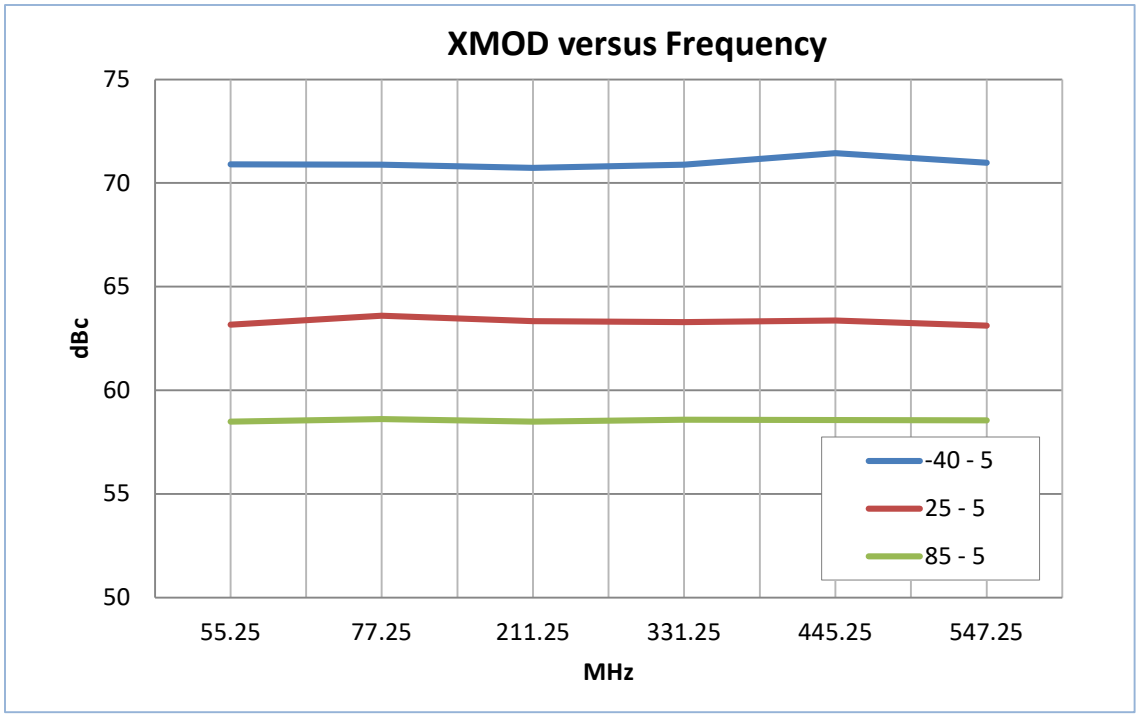

Performance Plots

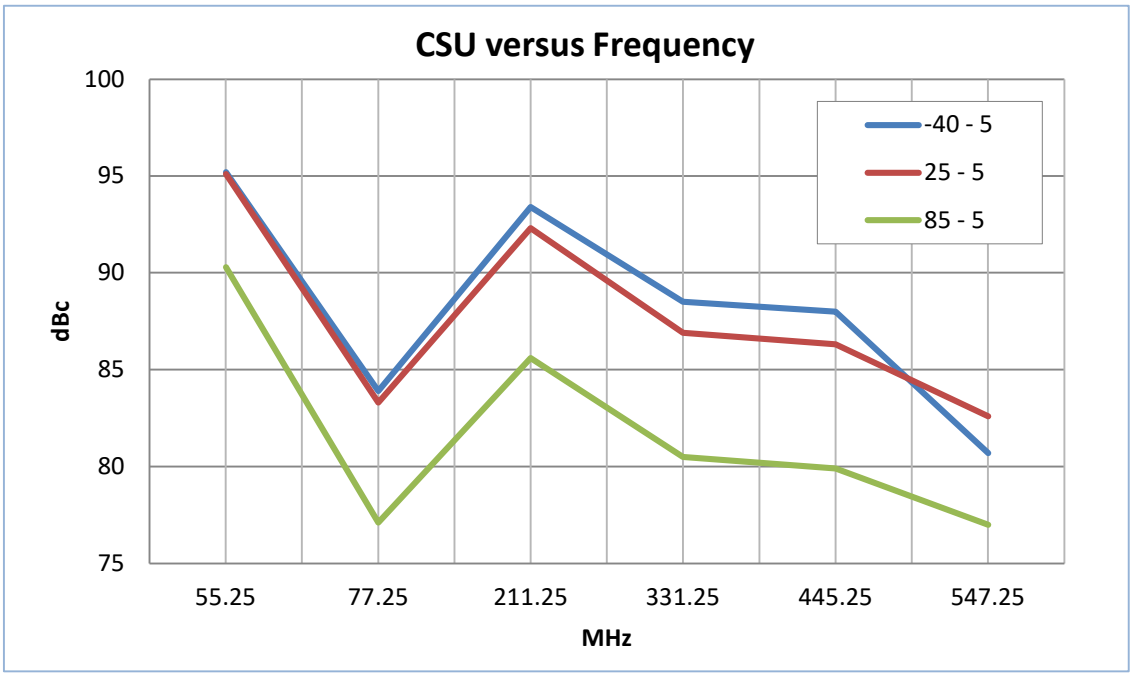

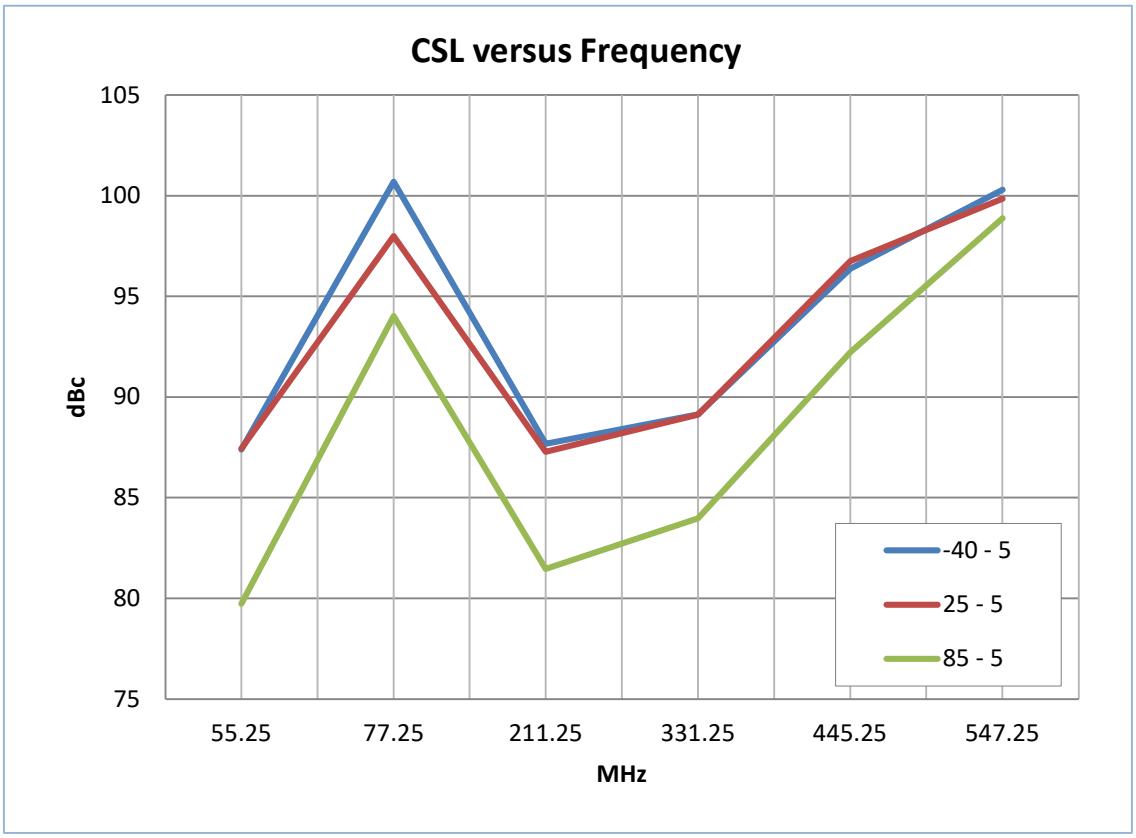

Package Marking

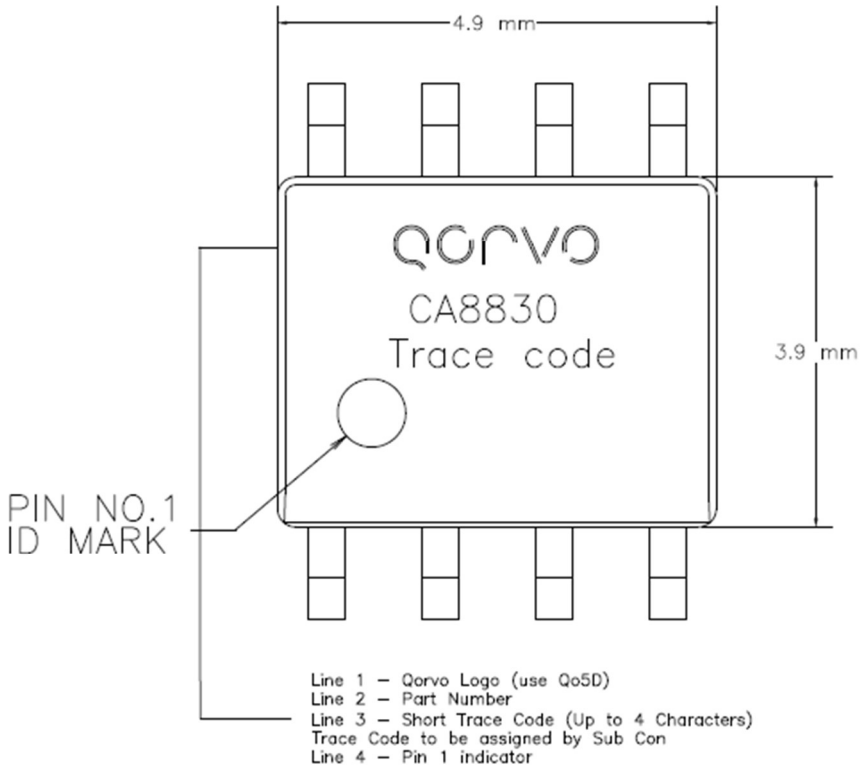

Pin Configuration and Description

Pin	Name	Description
1	RFIN1	RF input for plus side of amplifier.
2	NC	Internally not connected. Leave it open or connect to GND.
3	NC	Internally not connected. Leave it open or connect to GND.
4	RFIN2	RF input for minus side of amplifier.
5	RFOUT2	RF output for minus side of amplifier.
6	Bias	Bias pin. Can be used to adjust the device current.
7	NC	Internally not connected. Leave it open or connect to GND.
8	RFOUT1	RF output for plus side of amplifier.
9	GND	Exposed bottom of part, device ground.

Package Dimensions

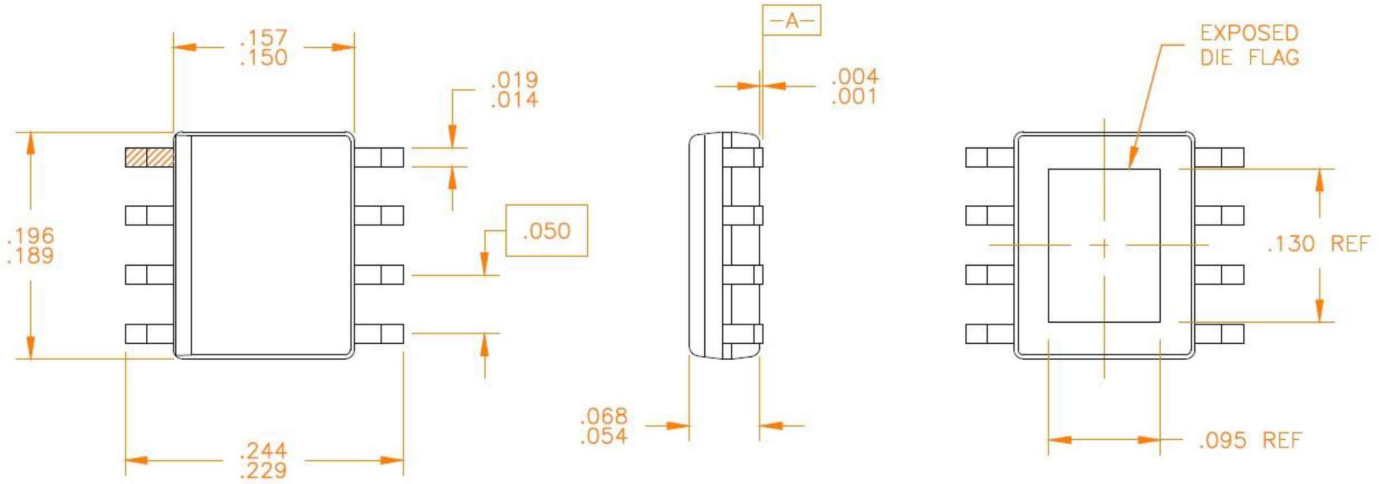

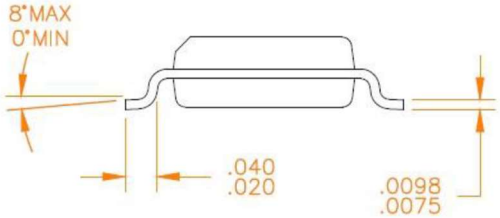

1. All dimensions are in inches. Angles are in degrees.

PCB Mounting Pattern

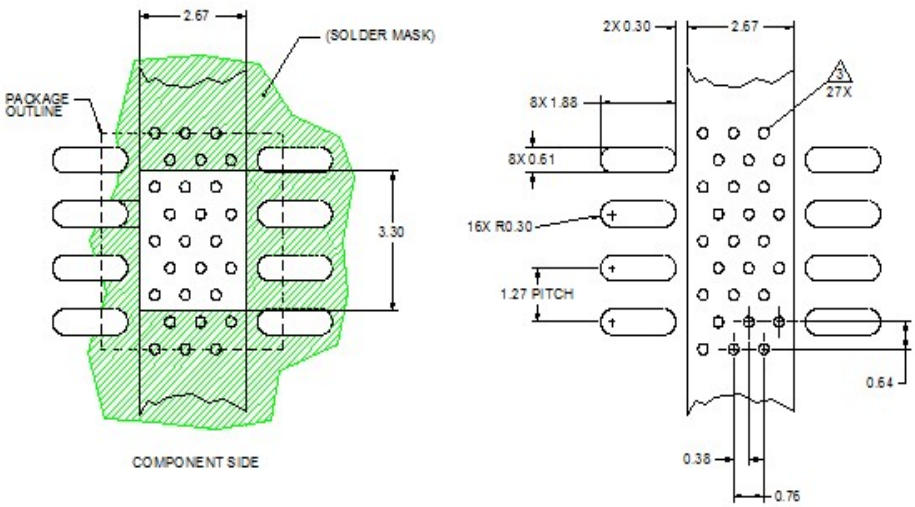

Notes:

1. All dimensions are in millimeters. Angles are in degrees.
2. Use 1 oz. copper minimum for top and bottom layer metal.
3. Vias are required under the backside paddle of this device for proper RF/DC grounding and thermal dissipation. We recommend a 0.35mm (#80/.0135") diameter bit for drilling via holes and a final plated thru diameter of 0.25mm (0.010”).
4. Ensure good package backside paddle solder attach for reliable operation and best electrical performance.

Handling Precautions

Parameter	Rating	Standard
ESD – Human Body Model (HBM)	Class 1A	ESDA / JEDEC JS-001-2012
ESD – Charged Device Model (CDM)	Class C3	JEDEC JESD22-C101F
MSL – Moisture Sensitivity Level	Level 1	IPC/JEDEC J-STD-020

Caution!
ESD-Sensitive Device

Solderability

Compatible with both lead-free (260 °C max. reflow temp.) and tin/lead (245 °C max. reflow temp.) soldering processes.
Solder profiles available upon request.

Contact plating: Matte Sn.

RoHS Compliance

This part is compliant with 2011/65/EU RoHS directive (Restrictions on the Use of Certain Hazardous Substances in Electrical and Electronic Equipment) as amended by Directive 2015/863/EU.

This product also has the following attributes:

- Lead Free
- Halogen Free (Chlorine, Bromine)
- Antimony Free
- TBBP-A ($C_{15}H_{12}Br_4O_2$) Free
- PFOS Free
- SVHC Free

Contact Information

For the latest specifications, additional product information, worldwide sales and distribution locations:

Tel: 1-844-890-8163

Web: www.qorvo.com

Email: customer.support@qorvo.com

Important Notice

The information contained herein is believed to be reliable; however, Qorvo makes no warranties regarding the information contained herein and assumes no responsibility or liability whatsoever for the use of the information contained herein. All information contained herein is subject to change without notice. Customers should obtain and verify the latest relevant information before placing orders for Qorvo products. The information contained herein or any use of such information does not grant, explicitly or implicitly, to any party any patent rights, licenses, or any other intellectual property rights, whether with regard to such information itself or anything described by such information. **THIS INFORMATION DOES NOT CONSTITUTE A WARRANTY WITH RESPECT TO THE PRODUCTS DESCRIBED HEREIN, AND QORVO HEREBY DISCLAIMS ANY AND ALL WARRANTIES WITH RESPECT TO SUCH PRODUCTS WHETHER EXPRESS OR IMPLIED BY LAW, COURSE OF DEALING, COURSE OF PERFORMANCE, USAGE OF TRADE OR OTHERWISE, INCLUDING THE IMPLIED WARRANTIES OF MERCHANTABILITY AND FITNESS FOR A PARTICULAR PURPOSE.**

Without limiting the generality of the foregoing, Qorvo products are not warranted or authorized for use as critical components in medical, life-saving, or life-sustaining applications, or other applications where a failure would reasonably be expected to cause severe personal injury or death.

Copyright 2016 © Qorvo, Inc. | Qorvo is a registered trademark of Qorvo, Inc.