© SII Semiconductor Corporation, 2016

Rev.1.1_00

The convenience timer is a CMOS timer IC which operates with low current consumption, and is suitable for the time management of the relative time.
The S-35730 Series outputs the clock pulse.
4 types of clock pulse frequency can be selected from 1 Hz to 32.768 kHz depending on the SET0 pin and the SET1 pin settings.

Caution **This product can be used in vehicle equipment and in-vehicle equipment. Before using the product in the purpose, contact to SII Semiconductor Corporation is indispensable.**

■ Features

- Clock pulse output function: Settable clock pulse frequency, with an output control pin
- Low current consumption: 0.7 μA typ. (Crystal oscillator: C_L = 6.0 pF, V_{DD} = 3.0 V, ENBL pin = "H", Ta = +25°C, FOUT pin = Nch open-drain output)
- Wide range of operation voltage: 1.8 V to 5.5 V
- Built-in 32.768 kHz crystal oscillation circuit
- Operation temperature range: Ta = −40°C to +125°C
- Lead-free (Sn 100%), halogen-free
- AEC-Q100 qualified*1

***1.** Contact our sales office for details.

■ Applications

- Intermittent operation of various systems
- Regular status monitoring of various systems

■ Package

- TMSOP-8

■ Block Diagram

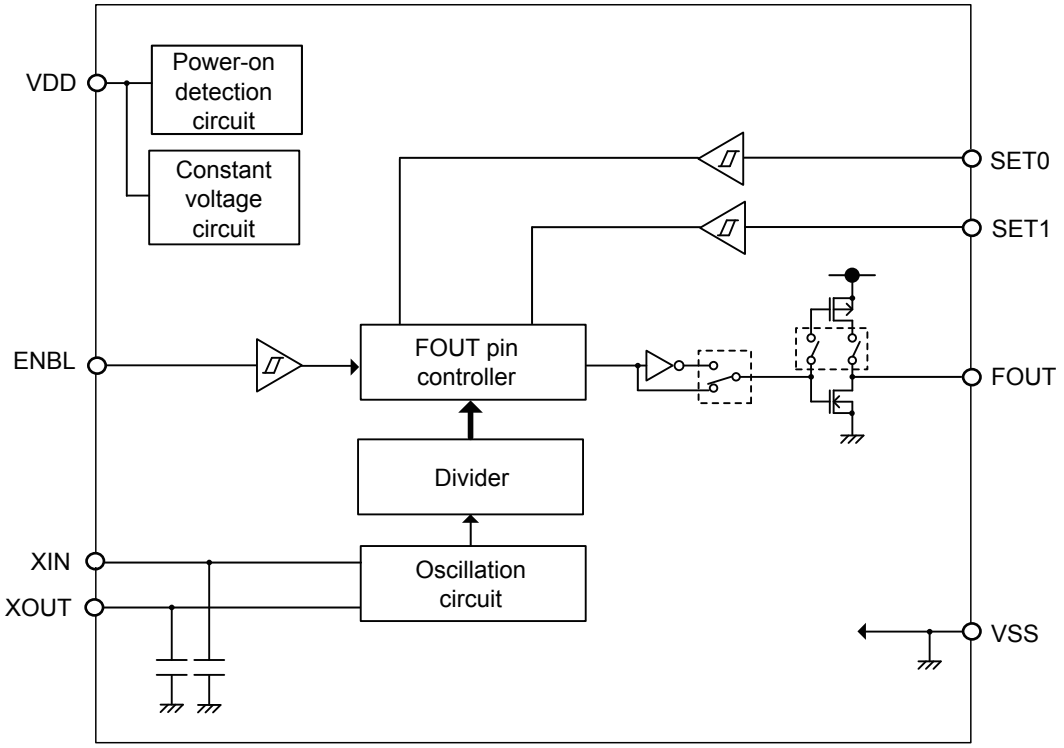

Figure 1

■ AEC-Q100 Qualified

This IC supports AEC-Q100 for operation temperature grade 1.
Contact our sales office for details of AEC-Q100 reliability specification.

■ Product Name Structure

1. Product name

S-35730 x xx A - K8T2 U

- U — Environmental code
  - U: Lead-free (Sn 100%), halogen-free
- K8T2 — Package abbreviation and IC packing specification*1
  - K8T2: TMSOP-8, Tape
- A — Operation temperature
  - A: Ta = −40°C to +125°C
- xx — Option code 2*2
- x — Option code 1
  - B: Crystal oscillator C_L = 9.0 pF
  - C: Crystal oscillator C_L = 6.0 pF
  - D: Crystal oscillator C_L = others*3
- S-35730 — Product name

***1.** Refer to the tape drawing.
***2.** A sequence number added by the optional function that is user-selected.
***3.** Contact our sales office for details.

2. Package

Table 1 Package Drawing Codes

Package Name	Dimension	Tape	Reel
TMSOP-8	FM008-A-P-SD	FM008-A-C-SD	FM008-A-R-SD

3. Product name list

Table 2

Product Name	FOUT Pin Output Form*1	SET0 Pin, SET1 Pin Settings*2 (SET0, SET1)			
		0, 0	0, 1	1, 0	1, 1
S-35730C01A-K8T2U	CMOS output	32.768 kHz	32 Hz	1.024 kHz	1 Hz

***1.** The pin of Nch open-drain output / CMOS output is selectable. Refer to "■ **Pin Functions**".
***2.** Regarding the pin settings and clock pulse frequency combinations, refer to "■ **FOUT Pin Clock Pulse Output**".

Remark Please contact our sales office for products with specifications other than the above.

■ Pin Configuration

1. TMSOP-8

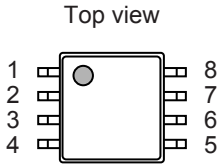

Figure 2

Table 3 List of Pins

Pin No.	Symbol	Description	I/O	Configuration
1	ENBL	Input pin for clock pulse output control	Input	CMOS input
2	XOUT	Connection pins for crystal oscillator	–	–
3	XIN			
4	VSS	GND pin	–	–
5	FOUT	Output pin for clock pulse	Output	Nch open-drain output / CMOS output is selectable
6	SET0	Input pins for clock pulse frequency setting	Input	CMOS input
7	SET1			
8	VDD	Pin for positive power supply	–	–

■ Pin Functions

1. SET0, SET1 (Input for clock pulse frequency setting) pins

These pins input the clock pulse frequency setting signals.
4 types of clock pulse frequency can be selected depending on the pin settings. Regarding the combination, refer to "**1. Options of clock pulse frequency**" in "**■ FOUT Pin Clock Pulse Output**".

2. ENBL (Input for clock pulse output control) pin

This pin controls the clock pulse output from the FOUT pin. The clock pulse is output from the FOUT pin when the ENBL pin is "H". The FOUT pin is fixed when the ENBL pin is "L".

3. FOUT (Output for clock pulse) pin

This pin outputs the clock pulse. Regarding the operation of the clock pulse output, refer to "**2. ENBL pin and clock pulse output of FOUT pin** " in "**■ FOUT Pin Clock Pulse Output**".
Also, the FOUT pin output form of Nch open-drain output / CMOS output can be selected.

4. XIN, XOUT (Connection for crystal oscillator) pins

Connect a crystal oscillator between the XIN pin and the XOUT pin.

5. VDD (Positive power supply) pin

Connect this pin with a positive power supply. Regarding the values of voltage to be applied, refer to "**■ Recommended Operation Conditions**".

6. VSS pin

Connect this pin to GND.

■ Equivalent Circuits of Pins

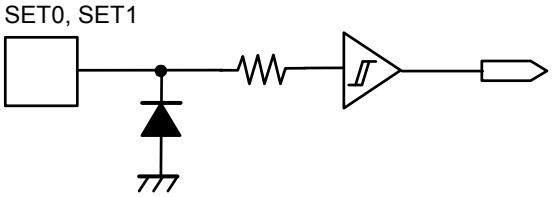

Figure 3 SET0 Pin, SET1 Pin

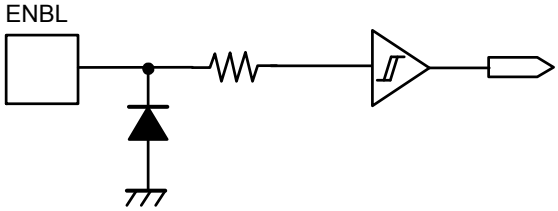

Figure 4 ENBL Pin

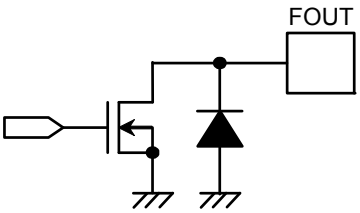

Figure 5 FOUT Pin (Nch Open-drain Output)

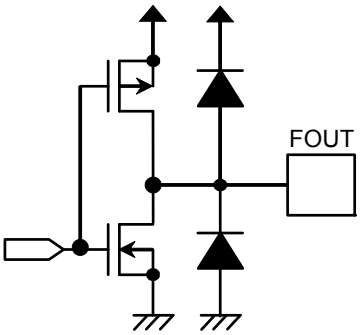

Figure 6 FOUT Pin (CMOS Output)

■ Absolute Maximum Ratings

Table 4

Item	Symbol	Applied Pin	Absolute Maximum Rating	Unit
Power supply voltage	V_{DD}	–	V_{SS} – 0.3 to V_{SS} + 6.5	V
Input voltage	V_{IN}	SET0, SET1, ENBL	V_{SS} – 0.3 to V_{SS} + 6.5	V
Output voltage	V_{OUT}	FOUT*1	V_{SS} – 0.3 to V_{SS} + 6.5	V
		FOUT*2	V_{SS} – 0.3 to V_{DD} + 0.3 ≤ V_{SS} + 6.5	V
Operation ambient temperature*3	T_{opr}	–	–40 to +125	°C
Storage temperature	T_{stg}	–	–55 to +150	°C

***1.** When Nch open-drain output is selected.
***2.** When CMOS output is selected.
***3.** Conditions with no condensation or frost. Condensation or frost causes short-circuiting between pins, resulting in a malfunction.

Caution The absolute maximum ratings are rated values exceeding which the product could suffer physical damage. These values must therefore not be exceeded under any conditions.

■ Recommended Operation Conditions

Table 5

(V_{SS} = 0 V)

Item	Symbol	Condition	Min.	Typ.	Max.	Unit
Operation power supply voltage	V_{DD}	Ta = –40°C to +125°C	1.8	–	5.5	V

■ Oscillation Characteristics

Table 6

(Ta = +25°C, V_{DD} = 3.0 V, V_{SS} = 0 V unless otherwise specified)
(Crystal oscillator (NX3215SA, C_L = 6.0 pF) manufactured by Nihon Dempa Kogyo Co., Ltd.)

Item	Symbol	Condition	Min.	Typ.	Max.	Unit
Oscillation start voltage	V_{STA}	Within 10 seconds	1.8	–	5.5	V
Oscillation start time	t_{STA}	–	–	–	1	s
IC-to-IC frequency deviation*1	δIC	–	–20	–	+20	ppm

***1.** Reference value

■ DC Electrical Characteristics

Table 7

(Ta = −40°C to +125°C, V_{SS} = 0 V unless otherwise specified)
(Crystal oscillator (NX3215SA, C_L = 6.0 pF) manufactured by Nihon Dempa Kogyo Co., Ltd.)

Item	Symbol	Applied Pin	Condition	Min.	Typ.	Max.	Unit
Current consumption 1	I_{DD1}	–	V_{DD} = 3.0 V, Ta = −40°C to +85°C, ENBL pin = V_{SS}, FOUT pin = no load	–	1.7	3.0	μA
			V_{DD} = 3.0 V, Ta = +125°C, ENBL pin = V_{SS}, FOUT pin = no load	–	2.7	4.5	μA
Current consumption 2	I_{DD2}	–	V_{DD} = 3.0 V, Ta = −40°C to +85°C, ENBL pin = V_{DD}, FOUT pin output = 32.768 kHz, FOUT pin = no load*1	–	0.7	0.85	μA
			V_{DD} = 3.0 V, Ta = +125°C, ENBL pin = V_{DD}, FOUT pin output = 32.768 kHz, FOUT pin = no load*1	–	1.2	1.9	μA
			V_{DD} = 3.0 V, Ta = −40°C to +85°C, ENBL pin = V_{DD}, FOUT pin output = 32.768 kHz, FOUT pin = no load*2	–	4.0	6.0	μA
			V_{DD} = 3.0 V, Ta = +125°C, ENBL pin = V_{DD}, FOUT pin output = 32.768 kHz, FOUT pin = no load*2	–	4.5	7.0	μA
High level input leakage current	I_{IZH}	SET0, SET1, ENBL	V_{IN} = V_{DD}	−0.5	–	0.5	μA
Low level input leakage current	I_{IZL}	SET0, SET1, ENBL	V_{IN} = V_{SS}	−0.5	–	0.5	μA
High level output leakage current	I_{OZH}	FOUT*2	V_{OUT} = V_{DD}	−0.5	–	0.5	μA
Low level output leakage current	I_{OZL}	FOUT*2	V_{OUT} = V_{SS}	−0.5	–	0.5	μA
High level input voltage	V_{IH}	SET0, SET1, ENBL	–	0.7 × V_{DD}	–	V_{SS} + 5.5	V
Low level input voltage	V_{IL}	SET0, SET1, ENBL	–	V_{SS} − 0.3	–	0.3 × V_{DD}	V
High level output voltage*2	V_{OH}	FOUT	I_{OH} = −0.4 mA	0.8 × V_{DD}	–	–	V
Low level output voltage	V_{OL}	FOUT	I_{OL} = 2.0 mA	–	–	0.4	V

***1.** When Nch open-drain output is selected.
***2.** When CMOS output is selected.

■ FOUT Pin Clock Pulse Output

1. Options of clock pulse frequency

4 types of FOUT pin clock pulse output can be selected as the option from the frequency of 1 Hz to 32.768 kHz. **Table 8** shows the pin settings and the list of options for the FOUT pin clock pulse frequency.

Table 8 List of Options

Pin Setting		Clock Pulse Frequency 1	Clock Pulse Frequency 2	Clock Pulse Frequency 3	Clock Pulse Frequency 4
SET0	SET1				
L	L	32.768 kHz	16.384 kHz	8.192 kHz	4.096 kHz
L	H	128 Hz	64 Hz	32 Hz	16 Hz
H	L	2.048 kHz	1.024 kHz	512 Hz	256 Hz
H	H	8 Hz	4 Hz	2 Hz	1 Hz

For example, when the pin setting is SET0 pin = "L" and SET1 pin = "L", 1 clock pulse frequency can be selected from "32.768 kHz", "16.384 kHz", "8.192 kHz" and "4.096 kHz". The others cannot be selected.
Table 9 shows the example of the clock pulse frequency combination.

Table 9 Example of Options

Pin Setting		Clock Pulse Frequency
SET0	SET1	
L	L	32.768 kHz
L	H	32 Hz
H	L	1.024 kHz
H	H	1 Hz

2. ENBL pin and clock pulse output of FOUT pin

The FOUT pin outputs the clock pulse when the ENBL pin is "H". The FOUT pin is fixed to Nch open-drain output = "H" or CMOS output = "L" when the ENBL pin is "L". Since the input signal of the ENBL pin is not synchronized with the clock pulse output from the FOUT pin, the duty ratio may change when the "H" and "L" of the ENBL pin changes.
The example of the FOUT pin output timing is shown below.

Figure 7 Example FOUT Pin Output Timing (Nch Open-drain Output)

Figure 8 Example of FOUT Pin Output Timing (CMOS Output)

The SET0 pin and the SET1 pin input signals are not synchronized with the clock pulse output from the FOUT pin as well. Therefore, duty ratio may change if the SET0 pin and the SET1 pin settings are changed when the ENBL pin is "H".

Moreover, since the crystal oscillation circuit is unstable immediately after power-on, regardless of the status of the ENBL pin, the FOUT pin is fixed to Nch open-drain output = "H" or CMOS output = "L" for about 0.5 seconds after power-on.

■ Power-on Detection Circuit

In order for the power-on detection circuit to operate normally, raise the power supply voltage of the IC from 0.2 V or lower so that it reaches 1.8 V of the operation power supply voltage minimum value within 10 ms, as shown in **Figure 9**.

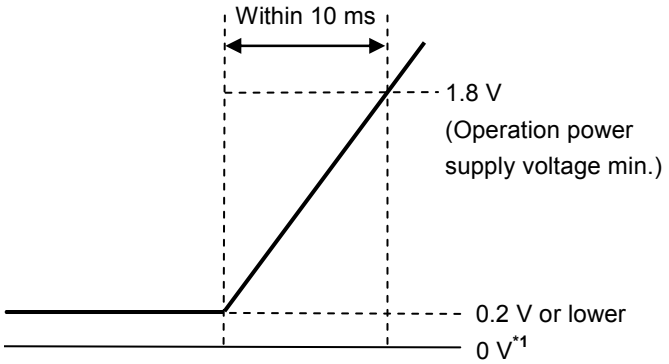

***1.** 0 V means that there is no potential difference between the VDD pin and the VSS pin of the S-35730 Series.

Figure 9 How to Raise Power Supply Voltage

If the power supply voltage of the S-35730 Series cannot be raised under the above conditions, the power-on detection circuit may not operate normally and an oscillation may not start. In such case, perform the operations shown in "**1. When power supply voltage is raised at ENBL pin = "L"** " and "**2. When power supply voltage is raised at ENBL pin = "H"** ".

1. When power supply voltage is raised at ENBL pin = "L"

Set the ENBL pin to "L" until the power supply voltage reaches 1.8 V or higher. While the ENBL pin is set to "L", the oscillation start signal becomes "H", and the crystal oscillation circuit normally oscillates. If the ENBL pin is set to "H" after the power supply voltage reaches 1.8 V, the oscillation start signal becomes "L" within 500 ms, and the oscillation status is maintained.

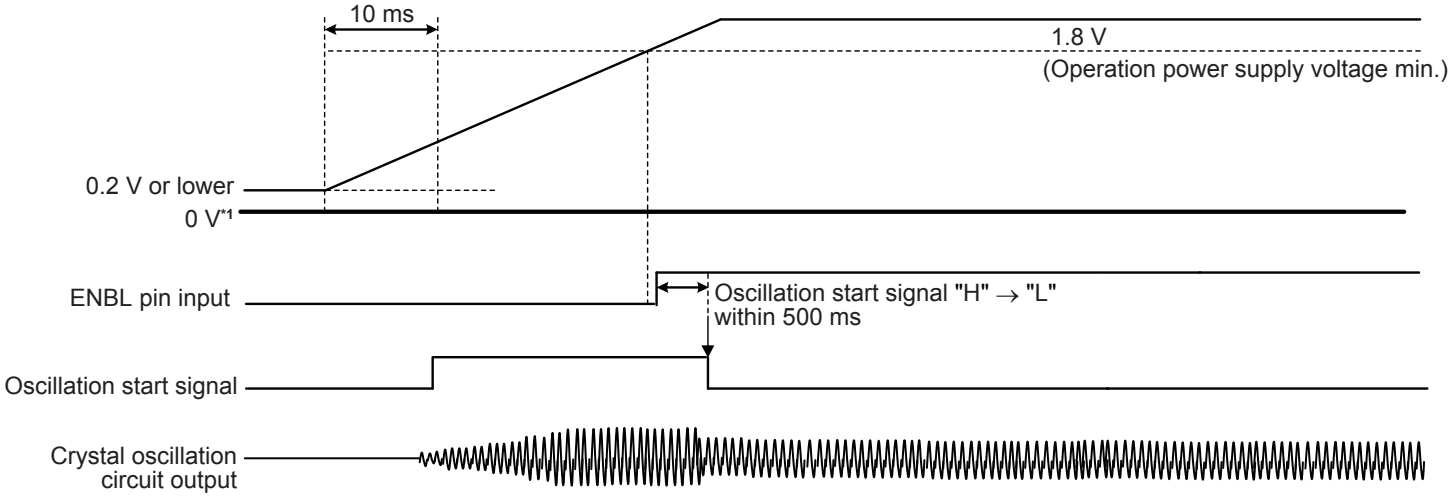

***1.** 0 V means that there is no potential difference between the VDD pin and the VSS pin of the S-35730 Series.

Figure 10 When Power Supply Voltage is Raised at ENBL Pin = "L"

2. When power supply voltage is raised at ENBL pin = "H"

Set the ENBL pin to "L" after the power supply voltage reaches 1.8 V or higher. If the ENBL pin is set to "L" for 500 ms or longer, the oscillation start signal becomes "H", and the crystal oscillation circuit normally oscillates. After that, if the ENBL pin is set to "H", the oscillation start signal becomes "L" within 500 ms, and the oscillation status is maintained.

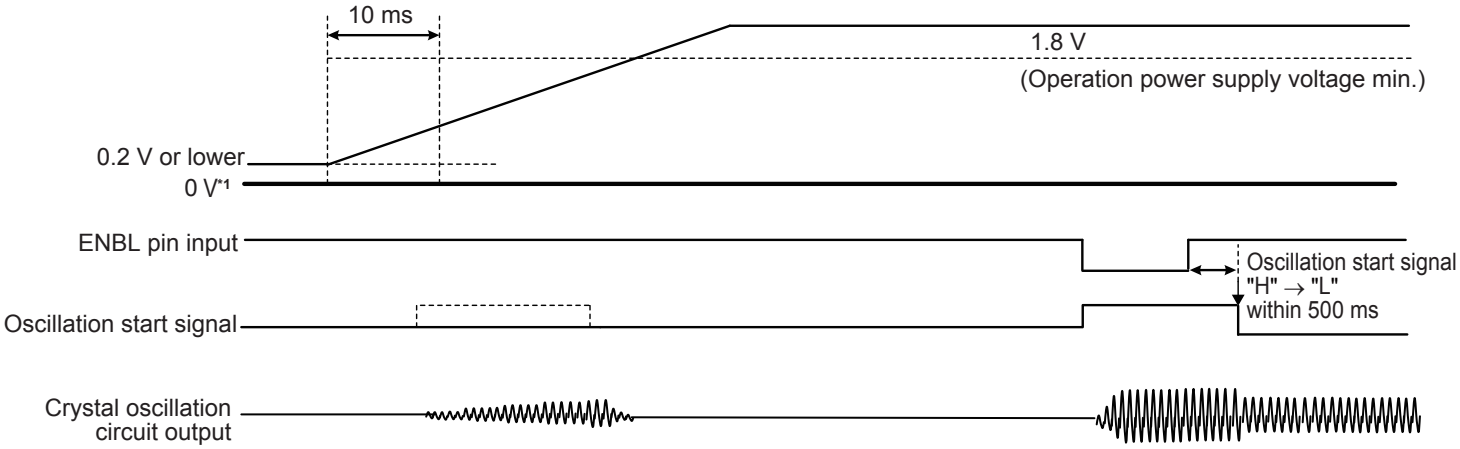

***1.** 0 V means that there is no potential difference between the VDD pin and the VSS pin of the S-35730 Series.

Figure 11 When Power Supply Voltage is Raised at ENBL Pin = "H"

■ Example of Application Circuit

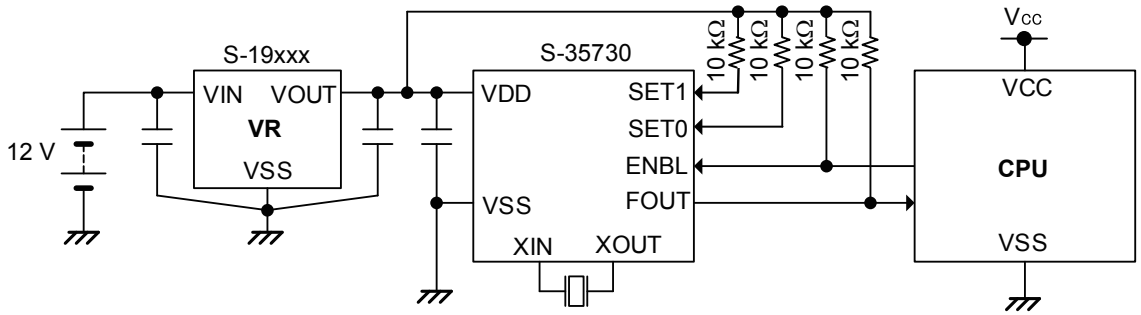

Figure 12

Caution **The above connection diagram does not guarantee operation. Set the constants after performing sufficient evaluation using the actual application**

■ Configuration of Crystal Oscillation Circuit

Since the S-35730 Series has built-in capacitors (C_g and C_d), adjustment of oscillation frequency is unnecessary. However, the crystal oscillation circuit is sensitive to external noise and parasitic capacitance (C_P), these effects may become a factor to worsen the clock accuracy. Therefore, the following steps are recommended for optimizing the configuration of the crystal oscillation circuit.

- Locate the bypass capacitor adjacent to the power supply pin of the S-35730 Series.
- Place the S-35730 Series and the crystal oscillator as close to each other as possible, and shorten the wiring.
- Increase the insulation resistance between pins and the board wiring patterns of XIN and XOUT.
- Do not place any signal or power lines close to the crystal oscillation circuit.
- Locate the GND layer immediately below the crystal oscillation circuit.
  (In the case of a multi-layer board, only the layer farthest from the oscillation circuit should be located as the GND layer. Do not locate a circuit pattern on the intermediate layers.)

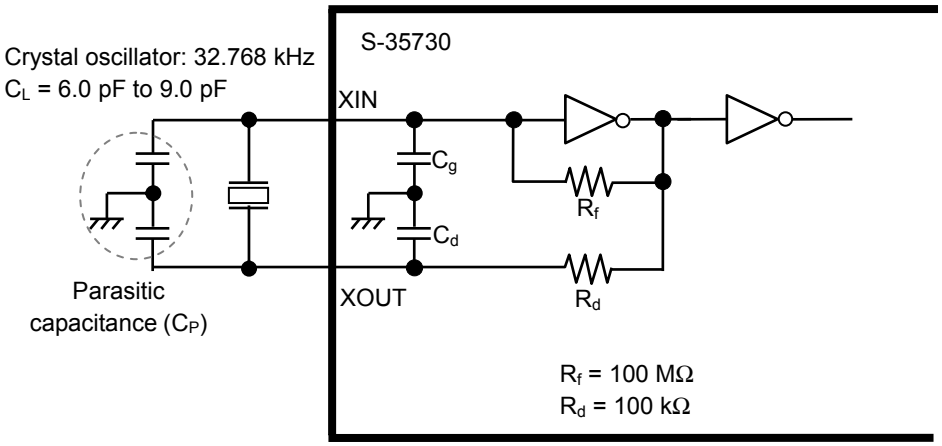

Figure 13 Configuration of Crystal Oscillation Circuit

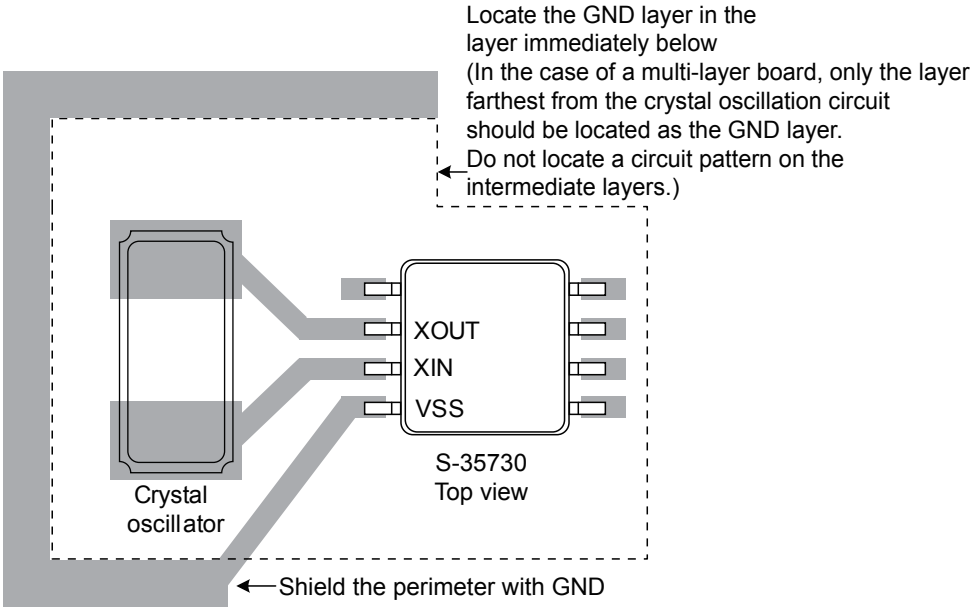

Figure 14 Example of Recommended Connection Pattern Diagram

Caution 1. Oscillation characteristics are subject to the variation of each component such as board parasitic capacitance, parasitic resistance, crystal oscillator and external capacitor. When configuring the crystal oscillation circuit, pay sufficient attention for them.

2. When using the product in automobile equipment, select the components which can be automobile carried for each component such as crystal oscillator, external capacitor and board.

■ Cautions When Using Crystal Oscillator

Request a crystal oscillator maker for a matching assessment of the IC and the crystal oscillator.
Refer to **Table 10** for recommended crystal oscillator characteristics values. When using the product in an environment over Ta = +85°C, it is recommended to ensure the oscillation allowance shown in **Table 10** at room temperature.

Table 10 Crystal Oscillator Characteristics

Crystal Oscillator C_L Value (Load Capacitance)	R_1 Value (Equivalent Series Resistance)	Oscillation Allowance at Power-on
9.0 pF	80 kΩ max.	5 times or more
6.0 pF	80 kΩ max.	5 times or more

■ Precautions

- Do not apply an electrostatic discharge to this IC that exceeds the performance ratings of the built-in electrostatic protection circuit.
- SII Semiconductor Corporation claims no responsibility for any disputes arising out of or in connection with any infringement by products including this IC of patents owned by a third party.

■ Characteristics (Typical Data)

1. Current consumption 1 vs. Power supply voltage characteristics

Ta = +25°C, C_L = 6.0 pF

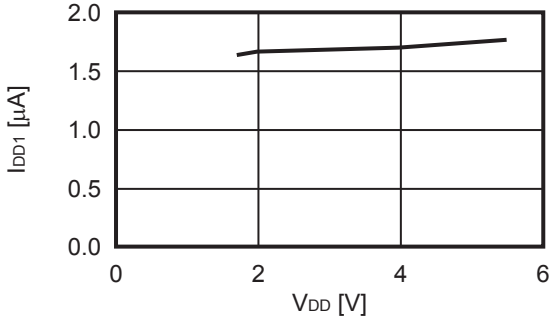

2. Current consumption 1 vs. Temperature characteristics

C_L = 6.0 pF

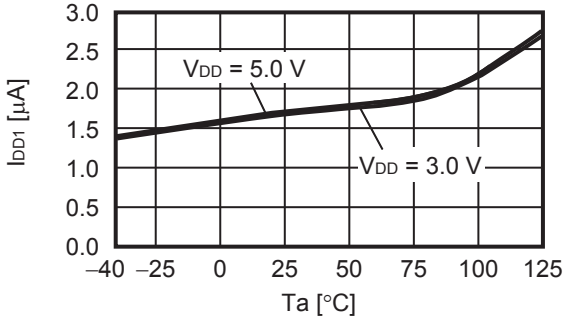

3. Current consumption 2 vs. Power supply voltage characteristics

Ta = +25°C, C_L = 6.0 pF
FOUT pin output = 32.768 kHz

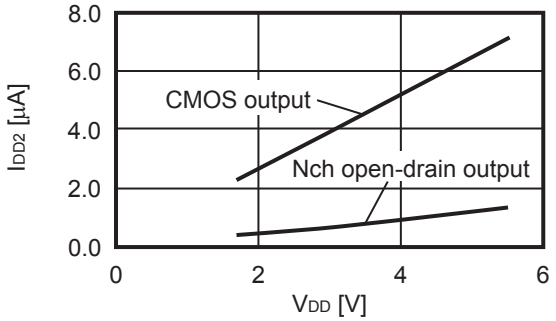

4. Current consumption 2 vs. Temperature characteristics

C_L = 6.0 pF, FOUT pin output = 32.768 kHz
Nch open-drain output

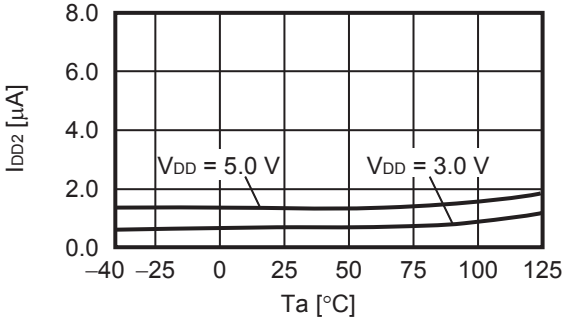

5. Current consumption 2 vs. Temperature characteristics

C_L = 6.0 pF, FOUT pin output = 32.768 kHz
CMOS output

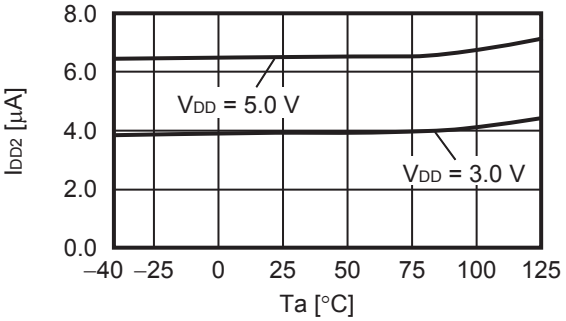

6. Current consumption 2 vs. FOUT pin load capacitance characteristics

Ta = +25°C, C_L = 6.0 pF
FOUT pin output = 32.768 kHz, CMOS output

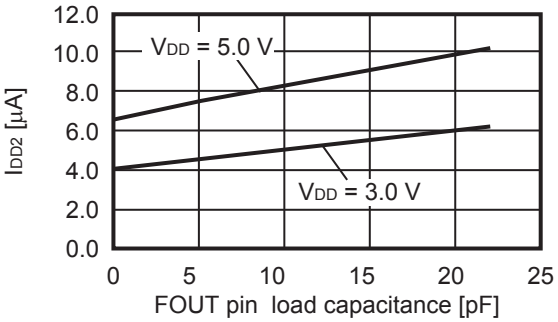

7. Current consumption 2 vs. FOUT pin output frequency characteristics

Ta = +25°C
Nch open-drain output

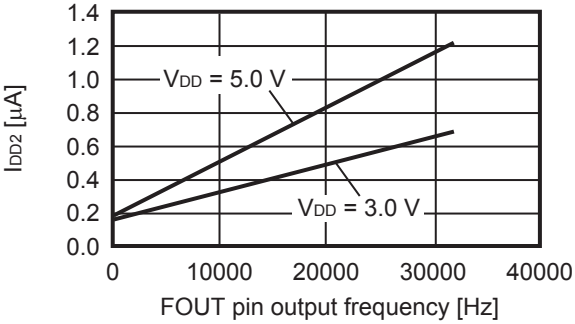

8. Current consumption 2 vs. FOUT pin output frequency characteristics

Ta = +25°C
CMOS output

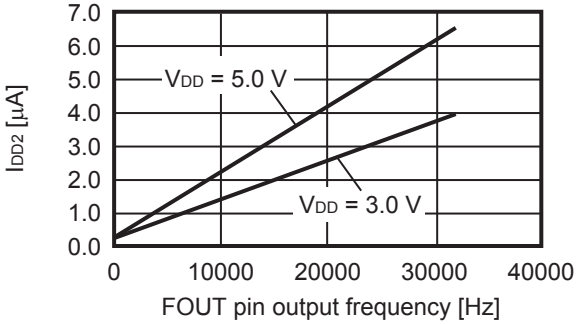

9. Crystal oscillator frequency deviation vs. Power supply voltage characteristics

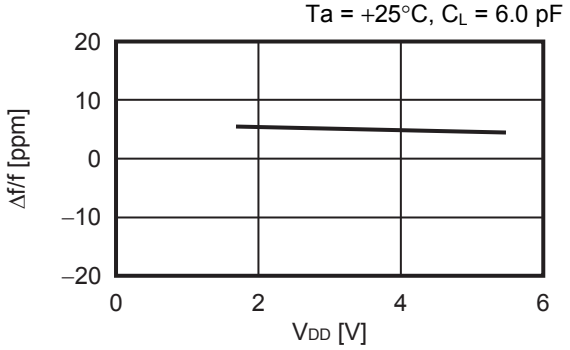

10. Crystal oscillator frequency deviation vs. Temperature characteristics

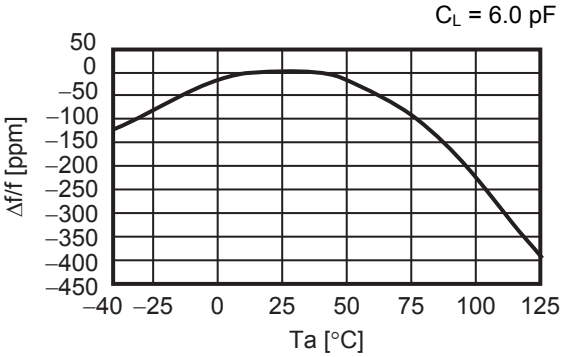

11. Low level output current vs. Output voltage characteristics

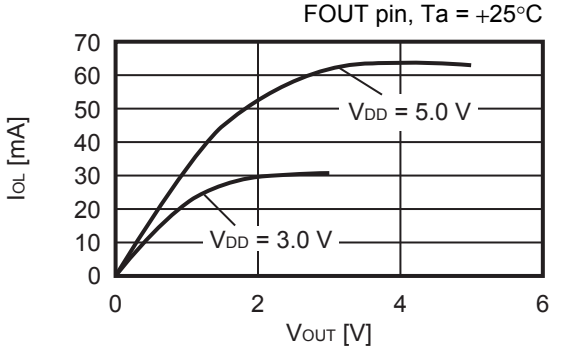

12. High level output current vs. $V_{DD} - V_{OUT}$ characteristics

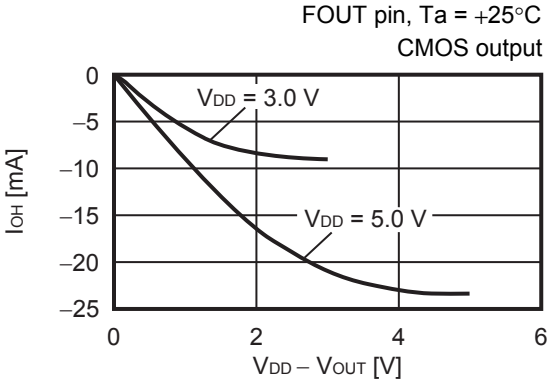

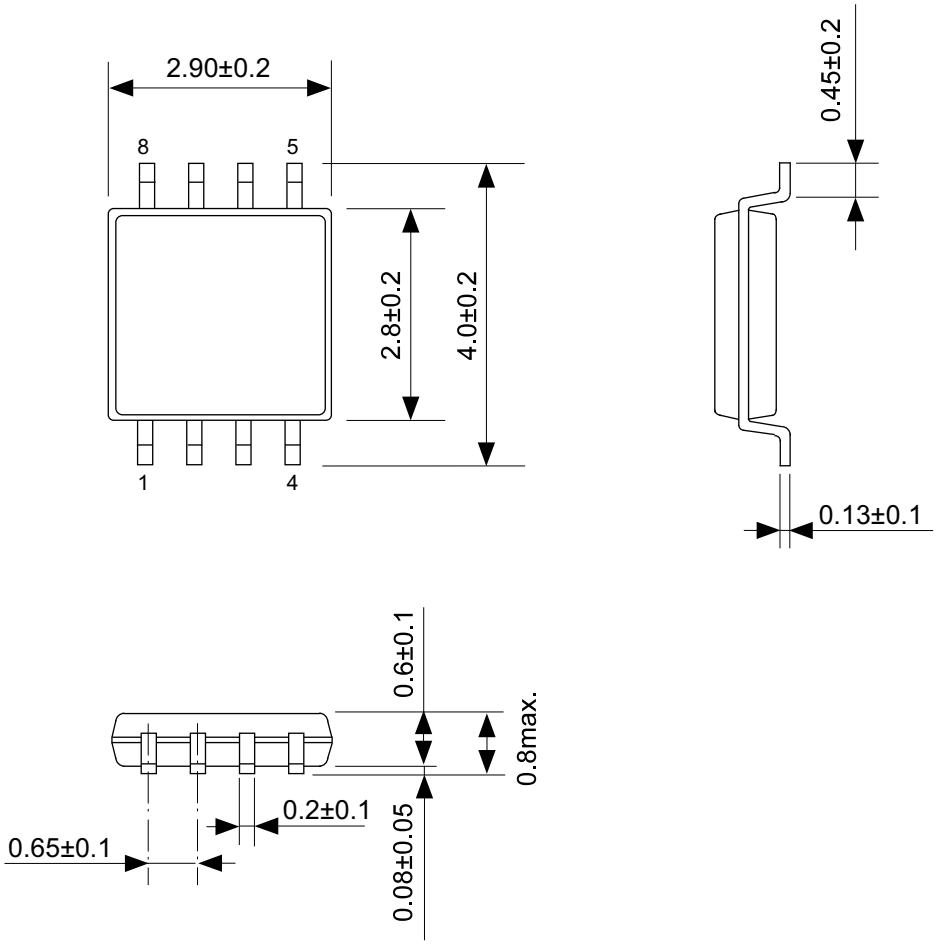

No. FM008-A-P-SD-1.2

TITLE	TMSOP8-A-PKG Dimensions
No.	FM008-A-P-SD-1.2
ANGLE	
UNIT	mm
SII Semiconductor Corporation	

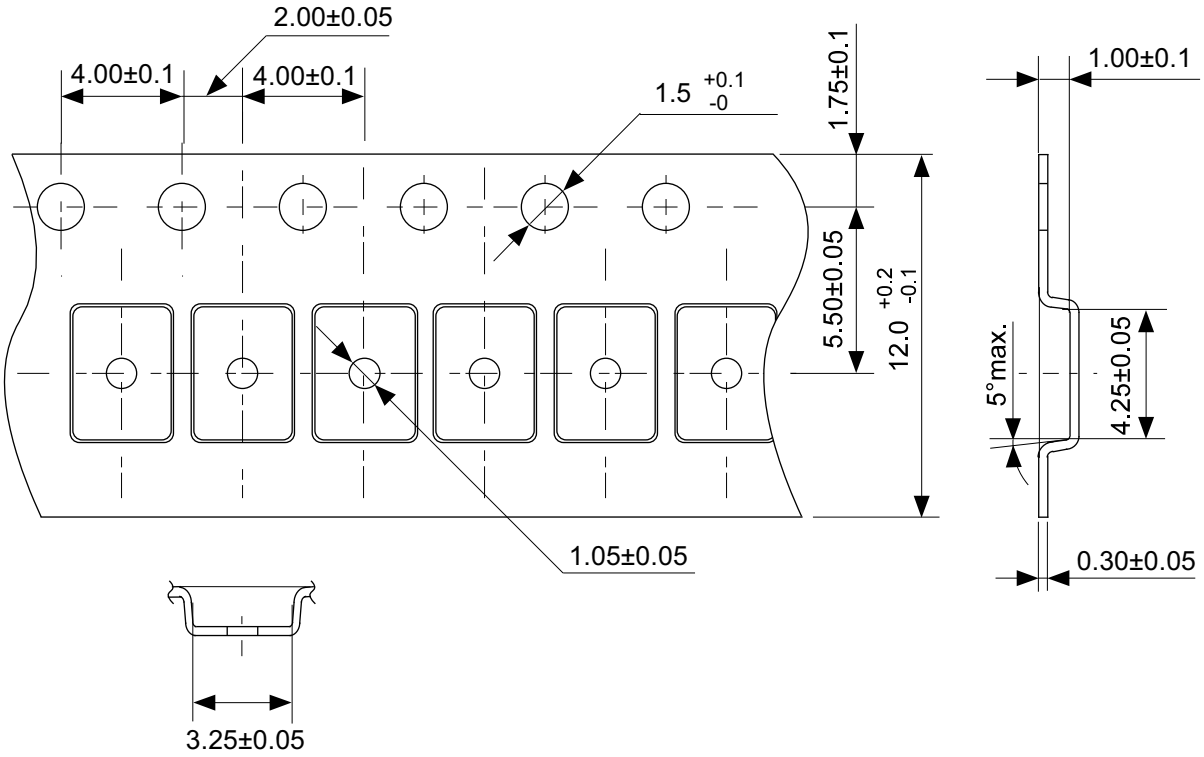

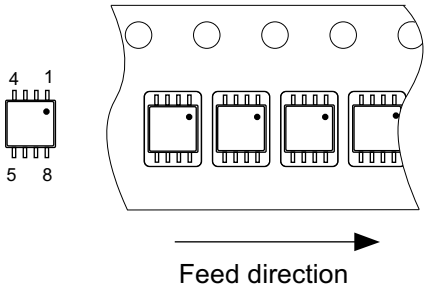

No. FM008-A-C-SD-2.0

TITLE	TMSOP8-A-Carrier Tape
No.	FM008-A-C-SD-2.0
ANGLE	
UNIT	mm
SII Semiconductor Corporation	

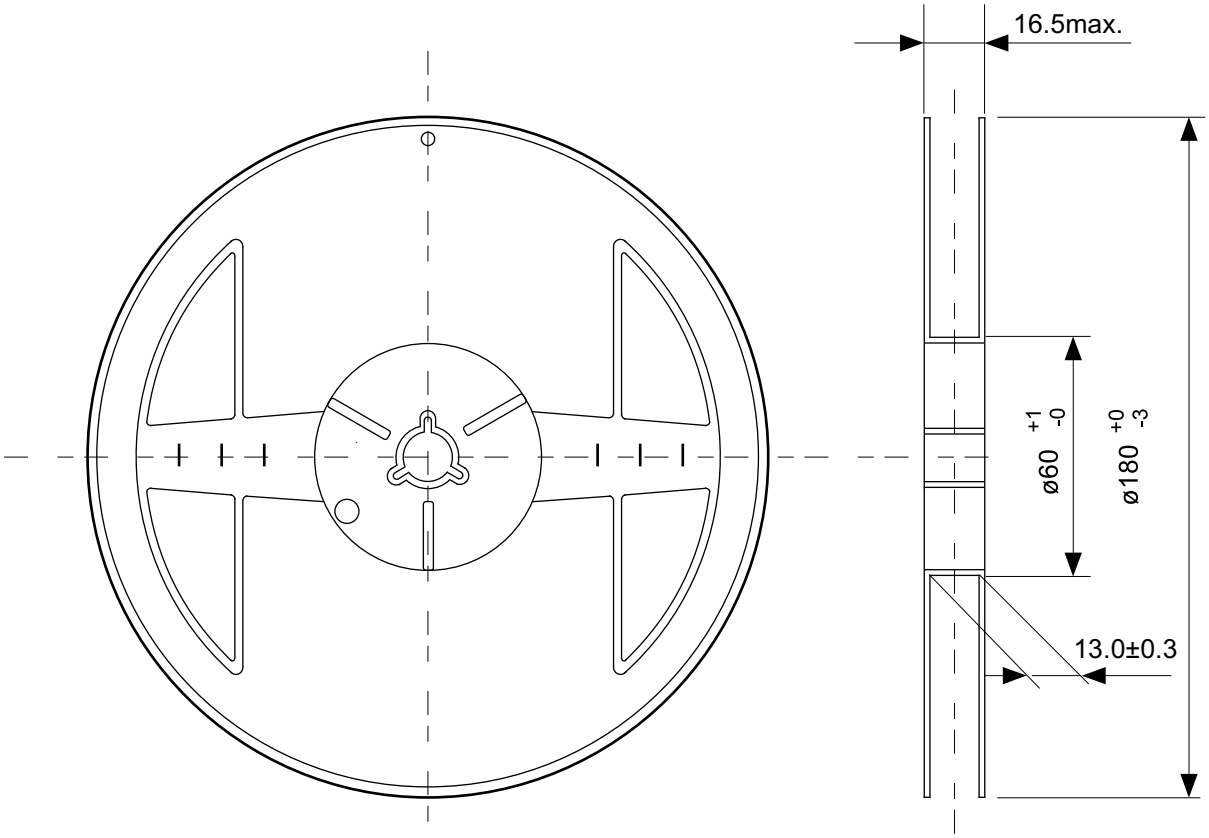

Enlarged drawing in the central part

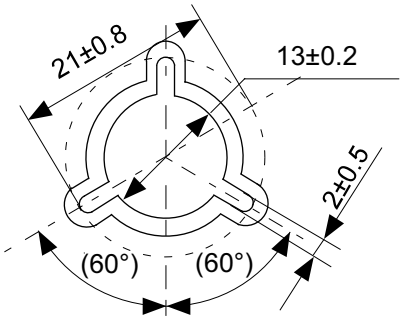

No. FM008-A-R-SD-1.0

TITLE	TMSOP8-A-Reel		
No.	FM008-A-R-SD-1.0		
ANGLE		QTY.	4,000
UNIT	mm		
SII Semiconductor Corporation			

Disclaimers (Handling Precautions)

1. All the information described herein (product data, specifications, figures, tables, programs, algorithms and application circuit examples, etc.) is current as of publishing date of this document and is subject to change without notice.
2. The circuit examples and the usages described herein are for reference only, and do not guarantee the success of any specific mass-production design.
   SII Semiconductor Corporation is not responsible for damages caused by the reasons other than the products or infringement of third-party intellectual property rights and any other rights due to the use of the information described herein.
3. SII Semiconductor Corporation is not responsible for damages caused by the incorrect information described herein.
4. Take care to use the products described herein within their specified ranges. Pay special attention to the absolute maximum ratings, operation voltage range and electrical characteristics, etc.
   SII Semiconductor Corporation is not responsible for damages caused by failures and/or accidents, etc. that occur due to the use of products outside their specified ranges.
5. When using the products described herein, confirm their applications, and the laws and regulations of the region or country where they are used and verify suitability, safety and other factors for the intended use.
6. When exporting the products described herein, comply with the Foreign Exchange and Foreign Trade Act and all other export-related laws, and follow the required procedures.
7. The products described herein must not be used or provided (exported) for the purposes of the development of weapons of mass destruction or military use. SII Semiconductor Corporation is not responsible for any provision (export) to those whose purpose is to develop, manufacture, use or store nuclear, biological or chemical weapons, missiles, or other military use.
8. The products described herein are not designed to be used as part of any device or equipment that may affect the human body, human life, or assets (such as medical equipment, disaster prevention systems, security systems, combustion control systems, infrastructure control systems, vehicle equipment, traffic systems, in-vehicle equipment, aviation equipment, aerospace equipment, and nuclear-related equipment), excluding when specified for in-vehicle use or other uses. Do not use those products without the prior written permission of SII Semiconductor Corporation.
   Especially, the products described herein cannot be used for life support devices, devices implanted in the human body and devices that directly affect human life, etc.
   Prior consultation with our sales office is required when considering the above uses.
   SII Semiconductor Corporation is not responsible for damages caused by unauthorized or unspecified use of our products.
9. Semiconductor products may fail or malfunction with some probability.
   The user of these products should therefore take responsibility to give thorough consideration to safety design including redundancy, fire spread prevention measures, and malfunction prevention to prevent accidents causing injury or death, fires and social damage, etc. that may ensue from the products' failure or malfunction.
   The entire system must be sufficiently evaluated and applied on customer's own responsibility.
10. The products described herein are not designed to be radiation-proof. The necessary radiation measures should be taken in the product design by the customer depending on the intended use.
11. The products described herein do not affect human health under normal use. However, they contain chemical substances and heavy metals and should therefore not be put in the mouth. The fracture surfaces of wafers and chips may be sharp. Take care when handling these with the bare hands to prevent injuries, etc.
12. When disposing of the products described herein, comply with the laws and ordinances of the country or region where they are used.
13. The information described herein contains copyright information and know-how of SII Semiconductor Corporation.
    The information described herein does not convey any license under any intellectual property rights or any other rights belonging to SII Semiconductor Corporation or a third party. Reproduction or copying of the information described herein for the purpose of disclosing it to a third-party without the express permission of SII Semiconductor Corporation is strictly prohibited.
14. For more details on the information described herein, contact our sales office.

1.0-2016.01