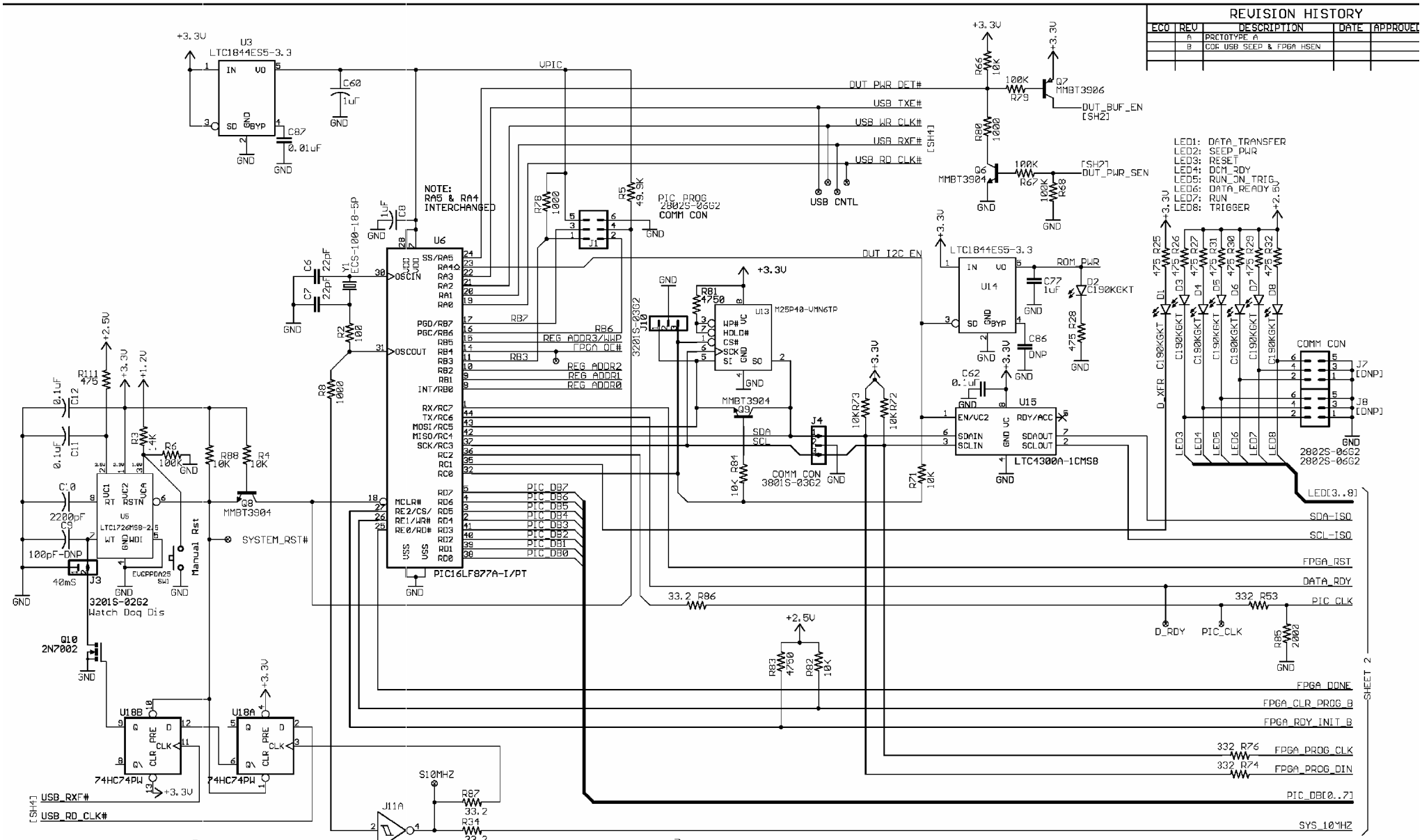
REVISION HISTORY
ECO REV DESCRIPTION DATE APPROVED
A PROTOTYPE A
B COR USB SEEP & FPGA HSEN
U3 LTC1844ES5-3.3
U6 PIC16LF877A-I/PT
U14 LTC1844ES5-3.3
U15 LTC4300A-1CMSB
U13 M25P40-VMN6TP
U5 LTC1726MS8-2.5
U18B 74HC74PW
U18A 74HC74PW
U11A NC7SP17P5X
U11PB 74HC74PW
NOTE: RA5 & RA4 INTERCHANGED
PIC PROG 2802S-06G2
COMM CON
USB CNTL
LED1: DATA_TRANSFER
LED2: SEEP_PWR
LED3: RESET
LED4: DCM_RDY
LED5: RUN_ON_TRIG
LED6: DATA_READY
LED7: RUN
LED8: TRIGGER
SYSTEM_RST#
Manual Rst
Watch Dog Dis
EXT_TRIGGER
SHEET 2
CUSTOMER NOTICE
LINEAR TECHNOLOGY HAS MADE A BEST EFFORT TO DESIGN A CIRCUIT THAT MEETS CUSTOMER-SUPPLIED SPECIFICATIONS; HOWEVER, IT REMAINS THE CUSTOMERS RESPONSIBILITY TO VERIFY PROPER AND RELIABLE OPERATION IN THE ACTUAL APPLICATION. COMPONENT SUBSTITUTION AND PRINTED CIRCUIT BOARD LAYOUT MAY SIGNIFICANTLY AFFECT CIRCUIT PERFORMANCE OR RELIABILITY. CONTACT LINEAR TECHNOLOGY APPLICATIONS ENGINEERING FOR ASSISTANCE
THIS CIRCUIT IS PROPRIETARY TO LINEAR TECHNOLOGY AND SUPPLIED FOR USE WITH LINEAR TECHNOLOGY PARTS
CONTRACT NO.
APPROVALS
DRAWN E TRELEWICZ
CHECKED
APPROVED
ENGINEER E TRELEWICZ
DESIGNER E TRELEWICZ
FILENAME: DC890B-1
LINEAR TECHNOLOGY
1630 McCarthy Blvd.
Milpitas, CA 95035
Phone: (408) 432-1900
Fax: (408) 434-0507
LTC Confidential For Customer Use Onl
TITLE: SCHEMATIC FastDAACS
(Fast Data Analysis & ACqusition System)
SIZE B
DWG NO. DC890B
REV: B
DATE: 6/02/2005 11:30:50a
SHEET 1 OF 4

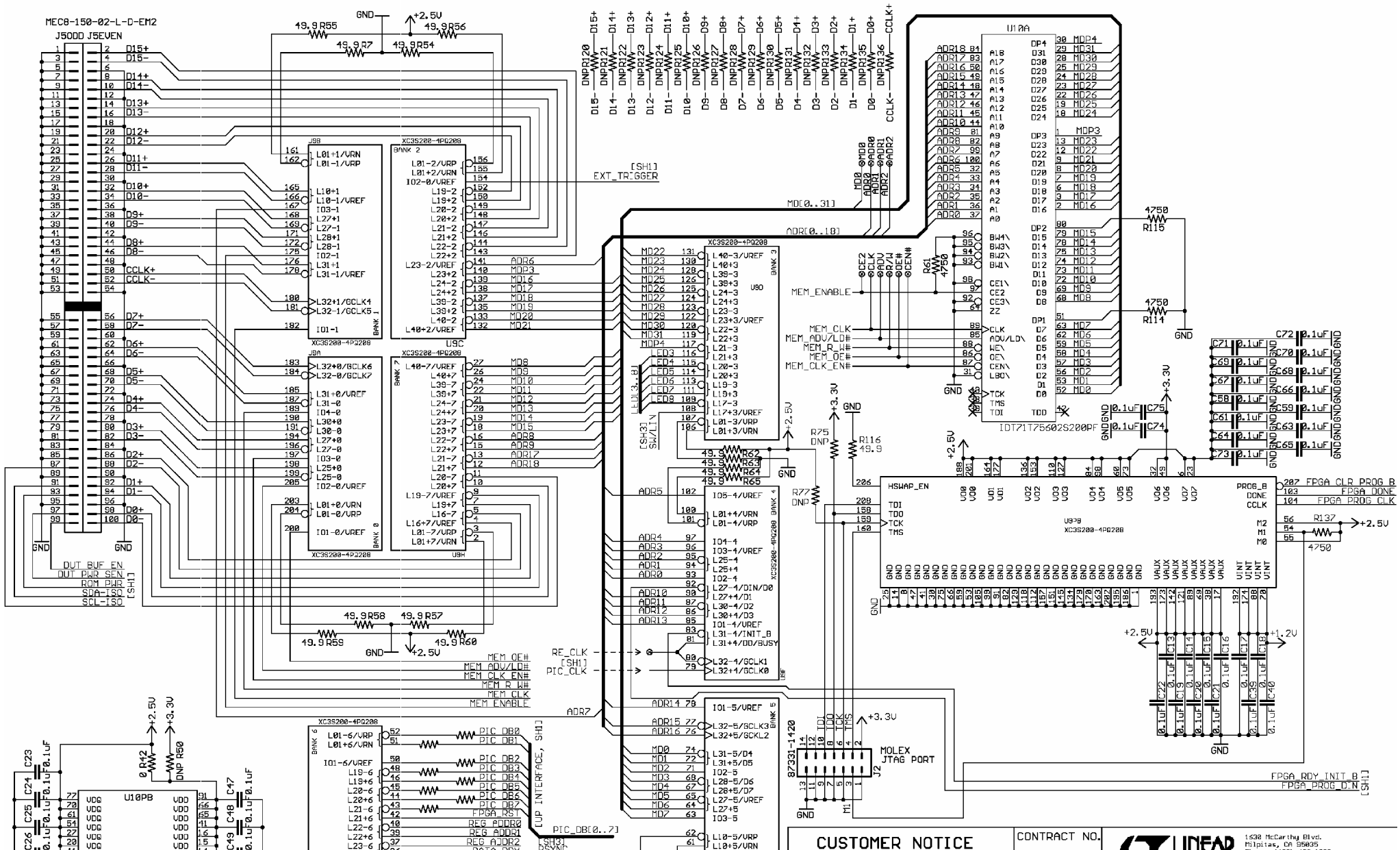
MEC8-150-02-L-D-EM2
J5ODD J5EVEN
U10A
IDT71T75602S200PF
U9B
U9C
U9A
U9H
U9D
U9E
U9F
U9G
U10PB
J2
MOLEX JTAG PORT
87331-1420
EXT_TRIGGER
MEM_ENABLE
MEM_CLK
MEM_ADV/LD#
MEM_R_W#
MEM_OE#
MEM_CLK_EN#
HSWAP_EN
FPGA_CLR_PROG_B
FPGA_DONE
FPGA_PROG_CLK
FPGA_RDY_INIT_B
FPGA_PROG_DIN
PIC_DB[0..7]
PIC_CLK
RE_CLK
DUT_BUF_EN
DUT_PWR_EN
ROM_PWR
SDA-ISO
SCL-ISO
CUSTOMER NOTICE
LINEAR TECHNOLOGY HAS MADE A BEST EFFORT TO DESIGN A CIRCUIT THAT MEETS CUSTOMER-SUPPLIED SPECIFICATIONS; HOWEVER, IT REMAINS THE CUSTOMERS RESPONSIBILITY TO VERIFY PROPER AND RELIABLE OPERATION IN THE ACTUAL APPLICATION. COMPONENT SUBSTITUTION AND PRINTED CIRCUIT BOARD LAYOUT MAY SIGNIFICANTLY AFFECT CIRCUIT PERFORMANCE OR RELIABILITY. CONTACT LINEAR TECHNOLOGY APPLICATIONS ENGINEERING FOR ASSISTANCE.
THIS CIRCUIT IS PROPRIETARY TO LINEAR TECHNOLOGY AND SUPPLIED FOR USE WITH LINEAR TECHNOLOGY PARTS
CONTRACT NO.
APPROVALS
DRAWN E TRELEWICZ
CHECKED
APPROVED
ENGINEER E TRELEWICZ
DESIGNER E TRELEWICZ
LINEAR TECHNOLOGY
1630 McCarthy Blvd.
Milpitas, CA 95035
Phone: (408) 432-1900
Fax: (408) 434-0507
LTC Confidential-For Customer Use Onl
TITLE: SCHEMATIC FastDAACS
(Fast Data Analysis & ACqusition System)
SIZE B
DWG NO. DC890B
REV: B
DATE: 6/02/2005 11:30:50a
SHEET 2 OF 4

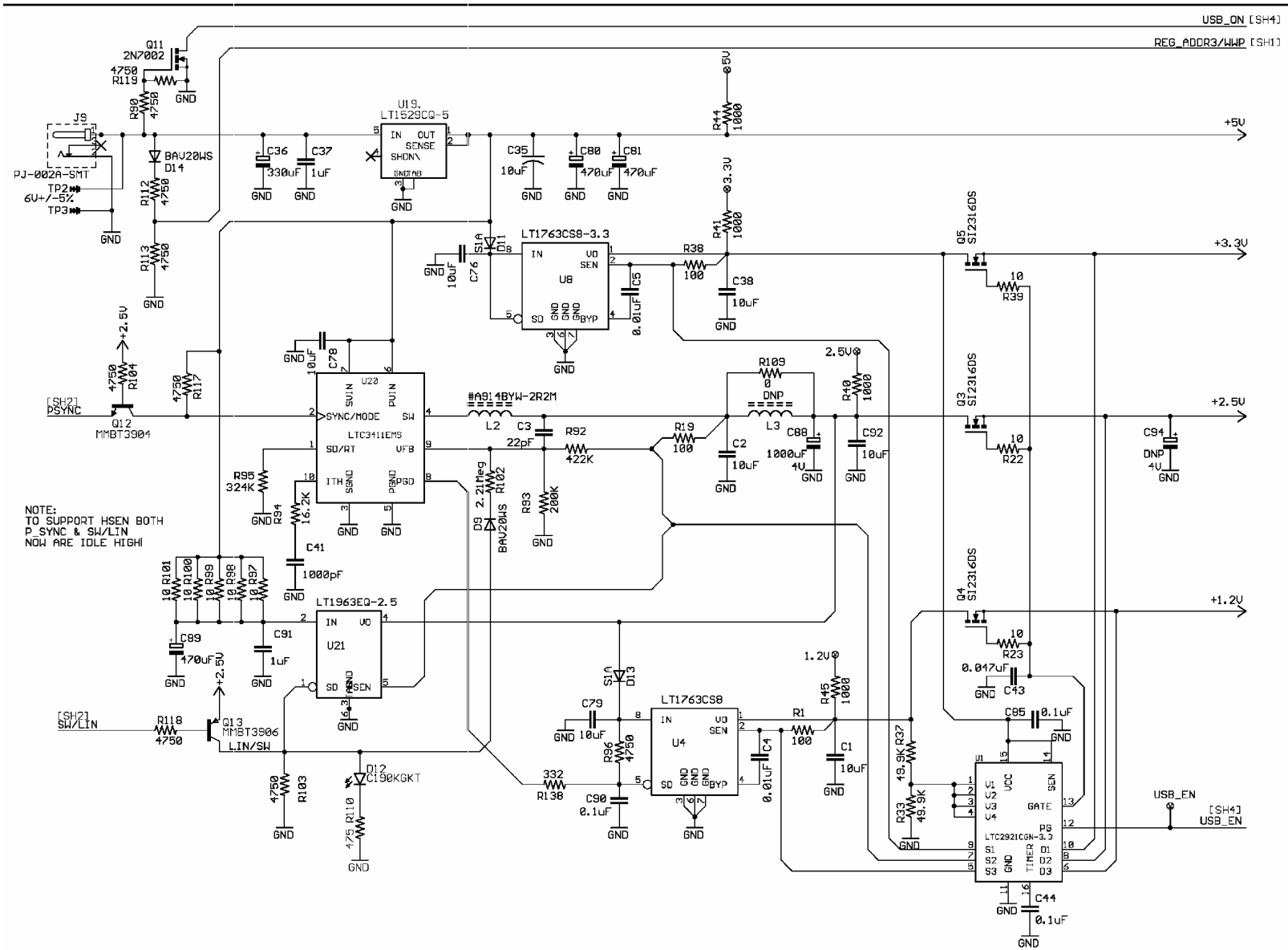

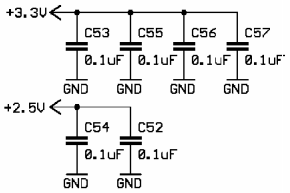

CUSTOMER NOTICE	CONTRACT NO.	LINEAR TECHNOLOGY — 1630 McCarthy Blvd. Milpitas, CA 95035 Phone: (408) 432-1900 Fax: (408) 434-0507 LTC Confidential-For Customer Use Onl	
LINEAR TECHNOLOGY HAS MADE A BEST EFFORT TO DESIGN A CIRCUIT THAT MEETS CUSTOMER-SUPPLIED SPECIFICATIONS; HOWEVER, IT REMAINS THE CUSTOMERS RESPONSIBILITY TO VERIFY PROPER AND RELIABLE OPERATION IN THE ACTUAL APPLICATION. COMPONENT SUBSTITUTION AND PRINTED CIRCUIT BOARD LAYOUT MAY SIGNIFICANTLY AFFECT CIRCUIT PERFORMANCE OR RELIABILITY. CONTACT LINEAR TECHNOLOGY APPLICATIONS ENGINEERING FOR ASSISTANCE	APPROVALS	TITLE: SCHEMATIC FastDAACS (Fast Data Analysis & ACqusition System)	
	DRAWN E TRELEWICZ		
	CHECKED		
	APPROVED		
	ENGINEER E TRELEWICZ	SIZE B	DWG NO. DC890B — REV: B
	DESIGNER E TRELEWICZ		
THIS CIRCUIT IS PROPRIETARY TO LINEAR TECHNOLOGY AND SUPPLIED FOR USE WITH LINEAR TECHNOLOGY PARTS	FILENAME: DC890B-1	DATE: 6/02/2005 11:30:50a	SHEET 3 OF 4

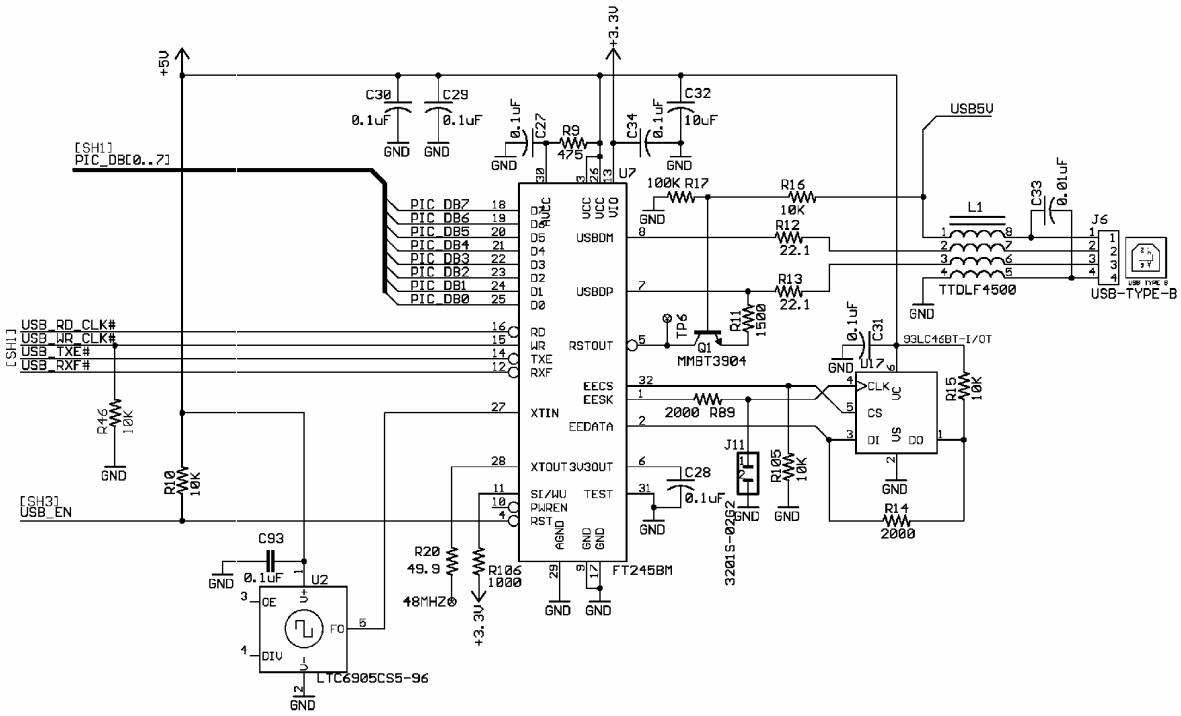

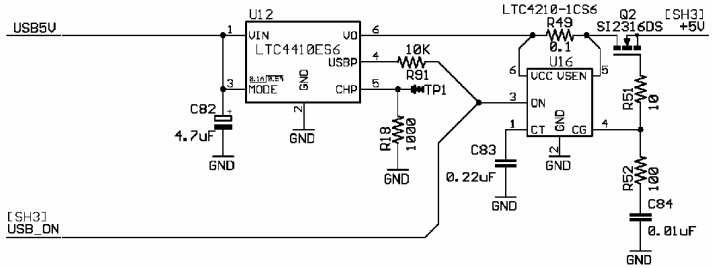

CUSTOMER NOTICE	CONTRACT NO.	LINEAR TECHNOLOGY — 1630 McCarthy Blvd. Milpitas, CA 95035 Phone: (408) 432-1900 Fax: (408) 434-0507 LTC Confidential-For Customer Use Onl	
LINEAR TECHNOLOGY HAS MADE A BEST EFFORT TO DESIGN A CIRCUIT THAT MEETS CUSTOMER-SUPPLIED SPECIFICATIONS; HOWEVER, IT REMAINS THE CUSTOMERS RESPONSIBILITY TO VERIFY PROPER AND RELIABLE OPERATION IN THE ACTUAL APPLICATION. COMPONENT SUBSTITUTION AND PRINTED CIRCUIT BOARD LAYOUT MAY SIGNIFICANTLY AFFECT CIRCUIT PERFORMANCE OR RELIABILITY. CONTACT LINEAR TECHNOLOGY APPLICATIONS ENGINEERING FOR ASSISTANCE	APPROVALS DRAWN E TRELEWICZ CHECKED APPROVED ENGINEER E TRELEWICZ DESIGNER E TRELEWICZ	TITLE: SCHEMATIC FastDAACS (Fast Data Analysis & ACqusition System)	
		SIZE B — DWG NO. DC890B	REV: B
THIS CIRCUIT IS PROPRIETARY TO LINEAR TECHNOLOGY AND SUPPLIED FOR USE WITH LINEAR TECHNOLOGY PARTS	FILENAME: DC890B-1	DATE: 6/02/2005 11:30:50a	SHEET 4 OF 4