Intel® 845G/845GL/845GV Chipset

Datasheet

Intel® 82845G/82845GL/82845GV Graphics and Memory Controller Hub (GMCH)

October 2002

Document Number: 290746-002

INFORMATION IN THIS DOCUMENT IS PROVIDED IN CONNECTION WITH INTEL® PRODUCTS. NO LICENSE, EXPRESS OR IMPLIED, BY ESTOPPEL OR OTHERWISE, TO ANY INTELLECTUAL PROPERTY RIGHTS IS GRANTED BY THIS DOCUMENT. EXCEPT AS PROVIDED IN INTEL'S TERMS AND CONDITIONS OF SALE FOR SUCH PRODUCTS, INTEL ASSUMES NO LIABILITY WHATSOEVER, AND INTEL DISCLAIMS ANY EXPRESS OR IMPLIED WARRANTY, RELATING TO SALE AND/OR USE OF INTEL PRODUCTS INCLUDING LIABILITY OR WARRANTIES RELATING TO FITNESS FOR A PARTICULAR PURPOSE, MERCHANTABILITY, OR INFRINGEMENT OF ANY PATENT, COPYRIGHT OR OTHER INTELLECTUAL PROPERTY RIGHT. Intel products are not intended for use in medical, life saving, or life sustaining applications.

Intel may make changes to specifications and product descriptions at any time, without notice.

Designers must not rely on the absence or characteristics of any features or instructions marked “reserved” or “undefined.” Intel reserves these for future definition and shall have no responsibility whatsoever for conflicts or incompatibilities arising from future changes to them.

The Intel 845G/845GL/845GV chipsets may contain design defects or errors known as errata which may cause the product to deviate from published specifications. Current characterized errata are available on request.

Contact your local Intel sales office or your distributor to obtain the latest specifications and before placing your product order.

I^2C is a two-wire communications bus/protocol developed by Philips. SMBus is a subset of the I^2C bus/protocol and was developed by Intel. Implementations of the I^2C bus/protocol may require licenses from various entities, including Philips Electronics N.V. and North American Philips Corporation.

Intel, Pentium, and the Intel logo are trademarks or registered trademarks of Intel Corporation or its subsidiaries in the United States and other countries.

*Other names and brands may be claimed as the property of others.

Copyright © 2002, Intel Corporation

Contents

1 Introduction 13

1.1 Terminology 13
1.2 Related Documents 14
1.3 Intel® 845G Chipset System Overview 15
1.4 Intel® 82845G GMCH Overview 17
1.4.1 Host Interface 17
1.4.2 System Memory Interface 17
1.4.3 Hub Interface 17
1.4.4 Multiplexed AGP and Intel® DVO Port Interface 18
1.4.5 Graphics Overview 18
1.4.6 Display Interfaces 19

2 Signal Description 21

2.1 Host Interface Signals 23
2.2 Memory Interface 25
2.2.1 DDR SDRAM Interface 25
2.2.2 SDR SDRAM Interface 26
2.3 Hub Interface 28
2.4 AGP Interface Signals 29
2.4.1 AGP Addressing Signals 29
2.4.2 AGP Flow Control Signals 29
2.4.3 AGP Status Signals 30
2.4.4 AGP Strobes 30
2.4.5 PCI Signals–AGP Semantics 31
2.4.6 PCI Pins during PCI Transactions on AGP Interface 32
2.5 Multiplexed Intel® DVO Device Signal Interfaces 32
2.5.1 Intel® DVO Signal Name to AGP Signal Name Pin Mapping 34
2.6 Analog Display 35
2.7 Clocks, Reset, and Miscellaneous Signals 36
2.8 RCOMP, VREF, VSWING Signals 36
2.9 Power and Ground Signals 37
2.10 Functional Straps 38
2.11 GMCH Sequencing Requirements 38
2.12 Reset States 39
2.12.1 Full and Warm Reset States 39

3 Register Description 41

3.1 Register Terminology 41
3.2 Platform Configuration 42
3.3 Routing Configuration Accesses 43
3.3.1 Standard PCI Bus Configuration Mechanism 44
3.3.2 PCI Bus #0 Configuration Mechanism 44
3.3.3 Primary PCI and Downstream Configuration Mechanism 44
3.3.4 AGP/PCI_B Bus Configuration Mechanism 44
3.4 I/O Mapped Registers 46
3.4.1 CONFIG_ADDRESS—Configuration Address Register 46
3.4.2 CONFIG_DATA—Configuration Data Register 47
3.5 Intel® GMCH Internal Device Registers 48

3.5.1 DRAM Controller/Host-Hub Interface Device Registers (Device 0) .. 48
3.5.1.1 VID—Vendor Identification Register (Device 0) 50
3.5.1.2 DID—Device Identification Register (Device 0)..... 50
3.5.1.3 PCICMD—PCI Command Register (Device 0) 51
3.5.1.4 PCISTS—PCI Status Register (Device 0)..... 52
3.5.1.5 RID—Revision Identification Register (Device 0)..... 53
3.5.1.6 SUBC—Sub-Class Code Register (Device 0)..... 53
3.5.1.7 BCC—Base Class Code Register (Device 0)..... 53
3.5.1.8 MLT—Master Latency Timer Register (Device 0)..... 54
3.5.1.9 HDR—Header Type Register (Device 0) 54
3.5.1.10 APBASE—Aperture Base Configuration Register (Device 0)..... 55
3.5.1.11 SVID—Subsystem Vendor Identification Register (Device 0)..... 56
3.5.1.12 SID—Subsystem Identification Register (Device 0)..... 56
3.5.1.13 CAPPTR—Capabilities Pointer Register (Device 0) 56
3.5.1.14 AGPM—AGP Miscellaneous Configuration Register (Device 0)..... 57
3.5.1.15 GC—Graphics Control Register (Device 0)..... 58
3.5.1.16 DRB[0:3]—DRAM Row Boundary Register (Device 0) 60
3.5.1.17 DRA—DRAM Row Attribute Register (Device 0) 61
3.5.1.18 DRT—DRAM Timing Register (Device 0) 62
3.5.1.19 DRC—DRAM Controller Mode Register (Device 0)..... 63
3.5.1.20 PAM[0:6]—Programmable Attribute Map Registers (Device 0)..... 64
3.5.1.21 FDHC—Fixed SDRAM Hole Control Register (Device 0) . 67
3.5.1.22 SMRAM—System Management RAM Control Register (Device 0)..... 67
3.5.1.23 ESMRAMC—Extended System Management RAM Control Register (Device 0) 68
3.5.1.24 ACAPID—AGP Capability Identifier Register (Device 0) .. 69
3.5.1.25 AGPSTAT—AGP Status Register (Device 0) 69
3.5.1.26 AGPCMD—AGP Command Register (Device 0)..... 70
3.5.1.27 AGPCTRL—AGP Control Register (Device 0)..... 70
3.5.1.28 APSIZE—Aperture Size Register (Device 0) 71
3.5.1.29 ATTBASE—Aperture Translation Table Register Device 0)..... 71
3.5.1.30 AMTT—AGP MTT Control Register (Device 0)..... 72
3.5.1.31 LPTT—AGP Low Priority Transaction Timer Register (Device 0)..... 72
3.5.1.32 GMCHCFG—GMCH Configuration Register (Device 0)... 73
3.5.1.33 ERRSTS—Error Status Register (Device 0) 74
3.5.1.34 ERRCMD—Error Command Register (Device 0)..... 75
3.5.1.35 SMICMD—SMI Command Register (Device 0) 76
3.5.1.36 SCICMD—SCI Command Register (Device 0) 76
3.5.1.37 SKPD—Scratchpad Data Register (Device 0) 76
3.5.1.38 CAPREG—Capability Identification Register (Device 0)... 77
3.5.2 Host-to-AGP Bridge Registers (Device 1)..... 78
3.5.2.1 VID1—Vendor Identification Register (Device 1) 79
3.5.2.2 DID1—Device Identification Register (Device 1)..... 79
3.5.2.3 PCICMD1—PCI Command Register (Device 1) 80
3.5.2.4 PCISTS1—PCI Status Register (Device 1)..... 81
3.5.2.5 RID1—Revision Identification Register (Device 1)..... 82
3.5.2.6 SUBC1—Sub-Class Code Register (Device 1)..... 82
3.5.2.7 BCC1—Base Class Code Register (Device 1)..... 82
3.5.2.8 MLT1—Master Latency Timer Register (Device 1)..... 83

3.5.2.9 HDR1—Header Type Register (Device 1)....83
3.5.2.10 PBUSN1—Primary Bus Number Register (Device 1) 83
3.5.2.11 SBUSN1—Secondary Bus Number Register (Device 1)...84
3.5.2.12 SUBUSN1—Subordinate Bus Number Register (Device 1).. 84
3.5.2.13 SMLT1—Secondary Bus Master Latency Timer Register (Device 1)....84
3.5.2.14 IOBASE1—I/O Base Address Register (Device 1)....85
3.5.2.15 IOLIMIT1—I/O Limit Address Register (Device 1)....85
3.5.2.16 SSTS1—Secondary Status Register (Device 1) 86
3.5.2.17 MBASE1—Memory Base Address Register (Device 1) 87
3.5.2.18 MLIMIT1—Memory Limit Address Register (Device 1) 88
3.5.2.19 PMBASE1—Prefetchable Memory Base Address Register (Device 1)....89
3.5.2.20 PMLIMIT1—Prefetchable Memory Limit Address Register (Device 1)....89
3.5.2.21 BCTRL1—Bridge Control Register (Device 1) 90
3.5.2.22 ERRCMD1—Error Command Register (Device 1)....91
3.5.3 Integrated Graphics Device Registers (Device 2)....92
3.5.3.1 VID2—Vendor Identification Register (Device 2) 93
3.5.3.2 DID2—Device Identification Register (Device 2)....93
3.5.3.3 PCICMD2—PCI Command Register (Device 2) 94
3.5.3.4 PCISTS2—PCI Status Register (Device 2)....95
3.5.3.5 RID2—Revision Identification Register (Device 2)....95
3.5.3.6 CC—Class Code Register (Device 2) 96
3.5.3.7 CLS—Cache Line Size Register (Device 2)....96
3.5.3.8 MLT2—Master Latency Timer Register (Device 2) 96
3.5.3.9 HDR2—Header Type Register (Device 2)....97
3.5.3.10 GMADR —Graphics Memory Range Address Register (Device 2)....97
3.5.3.11 MMADR—Memory Mapped Range Address Register (Device 2)....98
3.5.3.12 SVID2—Subsystem Vendor Identification Register (Device 2)....98
3.5.3.13 SID2—Subsystem Identification Register (Device 2) 98
3.5.3.14 ROMADR—Video BIOS ROM Base Address Registers (Device 2)....99
3.5.3.15 CAPPOINT—Capabilities Pointer Register (Device 2)....99
3.5.3.16 INTRLINE—Interrupt Line Register (Device 2)....99
3.5.3.17 INTRPIN—Interrupt Pin Register (Device 2) 100
3.5.3.18 MINGNT—Minimum Grant Register (Device 2) 100
3.5.3.19 MAXLAT—Maximum Latency Register (Device 2)....100
3.5.3.20 PMCAPID—Power Management Capabilities ID Register (Device 2)....100
3.5.3.21 PMCAP—Power Management Capabilities Register (Device 2)....101
3.5.3.22 PMCS—Power Management Control/Status Register (Device 2)....101
3.5.4 Device 6 Registers....102
3.5.4.1 DWTC—DRAM Write Throttling Control Register (Device 6)....102
3.5.4.2 DRTC—DRAM Read Throttling Control Register (Device 6)....103

4 Functional Description....105

4.1 Processor System Bus....105

4.1.1 PSB Dynamic Bus Inversion 105
4.1.2 System Bus Interrupt Delivery 106
4.1.3 Upstream Interrupt Messages 106
4.2 System Memory Controller 107
4.2.1 DDR SDRAM Interface Overview 107
4.2.2 SDR SDRAM Interface Overview 107
4.2.3 Memory Organization and Configuration 108
4.2.3.1 Configuration Mechanism for DIMMs 108
4.2.4 Memory Address Translation and Decoding 109
4.2.5 DRAM Performance Description 110
4.3 AGP Interface 111
4.3.1 Overview 111
4.3.1.1 Lock Behavior 111
4.3.1.2 AGP Target Operations 112
4.3.1.3 AGP Transaction Ordering 113
4.3.1.4 AGP Electrical Characteristics 113
4.3.1.5 Support for PCI-66 Devices 113
4.3.1.6 4X AGP Protocol 114
4.3.1.7 Fast Writes 114
4.3.1.8 AGP 1.5 V Connector 114
4.3.2 PCI Semantic Transactions on AGP 115
4.3.2.1 GMCH Initiator and Target PCI Operations 115
4.3.2.2 GMCH Retry/Disconnect Conditions 117
4.4 Integrated Graphics Device (IGD) 119
4.4.1 3D Engine 120
4.4.1.1 Setup Engine 120
4.4.1.2 Scan Converter 121
4.4.1.3 2D Functionality 121
4.4.1.4 Texture Engine 121
4.4.1.5 Raster Engine 124
4.4.1.6 2D Engine 126
4.4.1.7 GMCH VGA Registers 127
4.4.1.8 Logical 128-Bit Fixed BLT and 256-Bit Fill Engine 127
4.4.2 Video Engine 128
4.4.2.1 Hardware Motion Compensation 128
4.4.2.2 Planes 128
4.4.2.3 Cursor Plane 128
4.4.2.4 Overlay Plane 129
4.4.3 Pipes 130
4.4.3.1 Clock Generator Units (DPLL) 130
4.4.4 Ports 130
4.5 Display Interfaces 131
4.5.1 Analog Display Port Characteristics 132
4.5.2 Digital Display Interface 133
4.5.2.1 Digital Display Channels – DVOB and DVOC 133
4.5.2.2 Synchronous Display 135
4.6 Power and Thermal Management 136
4.6.1 Power Management Support Overview 136
4.6.2 Processor Power State Control 136
4.6.3 Sleep State Control 136
4.6.4 Graphics Adapter State Control 136
4.6.5 Monitor State Control 137
4.7 Clocking 137

5 System Address 139
5.1 System Memory Address Ranges 139
5.1.1 Compatibility Area 141
5.1.2 Extended Memory Area 143
5.1.2.1 15 MB–16 MB Window 143
5.1.2.2 Pre-Allocated Memory 143
5.1.3 AGP Memory Address Ranges 146
6 Electrical Characteristics 147
6.1 Absolute Maximum Ratings 147
6.2 Thermal Characteristics 147
6.3 Power Characteristics 148
6.4 Signal Groups 148
6.5 DC Parameters 150
6.6 DAC Characteristics 153
6.6.1 DAC DC Characteristics 153
6.6.2 DAC Reference and Output Specifications 154
6.6.3 DAC AC Characteristics 154
7 Ballout and Package Information 155
7.1 Intel® 82845G GMCH Ballout 155
7.2 Package Information 170
8 Testability 173
8.1 XOR Test Mode Initialization 173
8.2 XOR Chain Definition 173
8.3 XOR Chains Excluded Pins 180
9 Intel® 82845GL/82845GV GMCH 181
9.1 Processor System Bus (PSB) Frequency 181
9.2 No AGP Interface 182
9.3 Intel® 82845G and Intel® 82845GL/82845GV Signal Differences 182
9.3.1 Functional Straps (82845GL only) 182
9.4 Intel® 82845G and Intel® 82845GL/82845GV Register Differences 183
9.4.1 DRAM Controller/Host-Hub Interface Device Registers (Device 0) 183
9.4.1.1 Device 0 Registers Not in 82845GL/82845GV 183
9.4.1.2 Device 0 Register Bit Differences 184
9.4.2 Host-to-AGP Bridge Registers (Device 1) 186
9.5 Synchronous Display Differences 186
9.6 Intel® 82845GL\82845GV GMCH Ballout 186

Figures

1-1 Intel® 845G Chipset System Block Diagram 16
2-1 Intel® 82845G GMCH Interface Block Diagram 22
2-2 Intel® GMCH System Clock and Reset Requirements 38
2-3 Full and Warm Reset Waveforms 39
3-1 Conceptual Intel® 845G Chipset Platform PCI Configuration Diagram 43
3-2 Configuration Mechanism Type 0 Configuration Address to PCI Address Mapping 45
3-3 Configuration Mechanism Type 1 Configuration Address to PCI Address Mapping 46
3-4 PAM Register Attributes 65
4-1 Intel® GMCH Graphics Block Diagram 119
4-2 Intel® 845G Chipset-Based System Clocking Diagram 138
5-1 Memory System Address Map 140
5-2 Detailed Memory System Address Map 140
6-1 System Bus HCLKP/N VCROSS Range 153
7-1 Intel® 82845G GMCH Ballout Footprint (Top View – Left Side) 156
7-2 Intel® 82845G GMCH Ballout Footprint (Top View – Right Side) 157
7-3 Intel® 82845G GMCH Package Dimensions (Top and Side Views) 170
7-4 Intel® 82845G GMCH Package Dimensions (Bottom View) 171
9-1 Intel® 845GL/845GV Chipset System Block Diagram 181

Tables

2-1 DDR-to-SDR Signal Mapping 26
2-2 Voltage Levels and RCOMP for Various Interfaces 37
3-1 DRAM Controller/Host-Hub Register Address Map (Device 0) 48
3-2 PAM Register Attributes 65
3-3 Host-to-AGP Register Address Map (Device 1) 78
3-4 VGAEN and MDAP Bit Definitions 91
3-5 Integrated Graphics Device Register Address Map (Device2) 92
4-1 DINV Signals vs. Data Bytes 105
4-2 Supported DDR DIMM Configurations 108
4-3 Supported SDR DIMM Configurations 108
4-4 Data Bytes on DIMM Used for Programming DRAM Registers 109
4-5 Address Translation and Decoding 110
4-6 AGP Commands Supported by GMCH When Acting As an AGP Target 112
4-7 PCI Commands Supported by GMCH When Acting As a PCI Target 115
4-8 PCI Commands Supported by GMCH When Acting As an AGP/PCI_B Initiator 116
4-9 Display Port Characteristics 131
4-10 Analog Port Characteristics 132
5-1 Memory Segments and Their Attributes 141
5-2 Pre-allocated Memory 144
6-1 Absolute Maximum Ratings 147
6-2 Intel® 82845G GMCH Package Thermal Resistance 147
6-3 Power Characteristics 148
6-4 Signal Groups 148
6-5 DC Operating Characteristics 150
6-6 DC Characteristics 151
6-7 DAC DC Characteristics: Functional Operating Range (VCCDAC = 1.5 V ±5%) 153
6-8 DAC Reference and Output Specifications 154
6-9 DAC AC Characteristics 154
7-1 Intel® 82845G GMCH Ballout by Ball Number 158
7-2 Intel® 82845G GMCH Ballout by Signal Name 164
8-1 XOR Chain Output Pins 173
8-2 XOR Chains 0, 1, and 2 174
8-3 XOR Chains 3, 4, and 5 176
8-4 XOR Chains 6, 7, and 8 178
8-5 XOR Chains Excluded Pins 180
9-1 Intel® 82845GL/82845GV Ballout by Signal Name 187

Revision History

Revision	Changes	Date
-001	Initial release	May 2002
-002	Added 82845GV information (see appendix A for details)	October 2002

Intel® 82845G GMCH Features

- Host Interface Support
  - One processor in a mPGA478 package
  - Hyper-Threading Technology support
  - 400/533 MHz PSB (100/133 MHz bus clock)
  - PSB Dynamic Bus Inversion on the data bus
  - 32-bit addressing for access to 4 GB of memory space
  - 8 deep In Order Queue
  - AGTL+ On-die Termination
- System Memory Controller (SDR and DDR)
  - — One, 64-bit wide SDR or DDR SDRAM data channel
  - — Bandwidth up to 1 GB/s (SDR), and 2.1 GB/s (DDR266)
  - — Configurable to support either a DDR board or an SDR board
  - — 64-Mb, 128-Mb, 256-Mb, and 512-Mb SDRAM technologies
  - — Supports only x8 and x16 SDRAM devices with four banks
  - — Unbuffered, unregistered 184-pin non-ECC DDR SDRAM DIMMs only
  - — Opportunistic refresh
  - — Up to 16, simultaneously open pages
  - — SPD (Serial Presence Detect) scheme for DIMM detection
  - — Suspend-to-RAM support using CKE
  - — Double Data Rate (DDR) SDRAM Configuration
    - Up to 2.0 GB of 200 MHz or 266 MHz DDR SDRAM
    - Two DDR DIMMs, single-sided and/or double-sided
    - DDR200/266 unregistered, 184-pin non-ECC DDR SDRAM DIMMs
    - JEDEC DDR DIMM specification configurations only
    - Does not support double-sided x16 DDR DIMMs
    - Selective Command-Per-Clock (selective CPC) accesses.
  - — Single Data Rate (SDR) SDRAM Configuration
    - Up to 2.0 GB of 133 MHz SDR SDRAM
    - Up to two SDR DIMMs, single-sided and/or double-sided
    - PC133 unregistered 168-pin non-ECC SDR SDRAM DIMMs
    - Does not support PC100
    - Mixed-mode/uneven double-sided SDR DIMMs not supported
    - 3.3 V SDR DIMM configurations only
- AGP Interface
  - — Supports a single 1.5 V *Accelerated Graphics Port Interface, Specification 2.0*-compliant device
  - — Supports 1X/2X/4X data transfers and 2X/4X Fast Writes
  - — 32-deep AGP request queue
  - — AGP signals muxed with two Intel® DVO ports: Supports ADD cards
- Integrated Graphics
  - — Core Frequency of 200 MHz
  - — 3D Setup and Render Engine
    - Discrete Triangles, Strips and Fans Support
    - Indexed Vertex and Flexible Vertex Formats
    - Pixel Accurate Fast Scissoring and Clipping Operation
    - Backface Culling Support
    - Supports D3D and OGL Pixelization Rules
    - Anti-Aliased Lines Support
    - Sprite Points Support
  - — High Quality Texture Engine (see Section 1.4.5)
  - — 3D Graphics Rasterization Enhancements (see Section 1.4.5)
  - — 2D Graphics (see Section 1.4.5)
  - — Video DVD/PC-VCR (see Section 1.4.5)
  - — Video Overlay (see Section 1.4.5)
- Analog Display Support
  - — 350 MHz Integrated 24-bit RAMDAC
  - — Up to 2048x1536 at 60 Hz refresh
  - — Hardware Color Cursor Support
  - — DDC2B Compliant Interface
- Digital Display Channels
  - — Two channels multiplexed with AGP
  - — 165 MHz dot clock on each 12-bit interface
  - — Can combine two, 12-bit channels to form one 24-bit interface: Supports flat panels up to 2048x1536 at 60 Hz or dCRT/HDTV at 1920x1080 at 85 Hz
  - — Supports Hot Plug and Display
  - — Supports LVDS, TMDS transmitters or TV-out encoders
  - — ADD card utilizes AGP connector
  - — Three Display Control interfaces (I2C/DDC) multiplexed on AGP
- Hub Interface
  - — Supports Hub Interface 1.5
  - — 266 MB/s point-to-point Hub Interface to the ICH4
  - — 66 MHz base clock
  - — 1.5 V operation
- GMCH Package
  - — 37.5 mm x 37.5 mm FC-BGA package with 1 mm ball pitch

This page is intentionally left blank

Introduction 1

This Graphics and Memory Controller Hub (GMCH) datasheet is for the Intel® 82845G GMCH, Intel® 82845GL GMCH, and Intel® 82845GV GMCH. The 82845G GMCH is part of the Intel® 845G chipset, the 82845GL GMCH is part of the Intel® 845GL chipset, and the 82845GV GMCH is part of the Intel® 845GV chipset. Each chipset contains two main components: Graphics and Memory Controller Hub (GMCH) for the host bridge and I/O Controller Hub for the I/O subsystem. The GMCH provides the processor interface, system memory interface, hub interface, and additional interfaces in an 845G / 845GL / 845GV chipset desktop platform. Each GMCH contains an integrated graphics controller (IGD). The 845G chipset, 845GL chipset, and 845GV chipset use the 82801DB ICH4 for the I/O Controller Hub.

The following are the key feature differences between the 82845G GMCH, 82845GL GMCH, and 82845GV GMCH:

- Processor System Bus (PSB) frequency
  - 82845G and 82845GV support 533 MHz/400 MHz frequencies and Hyper-Threading Technology.
  - 82845GL supports 400 MHz only and does not support Hyper-Threading Technology.
- AGP Interface
  - 82845G supports AGP. The AGP interface signals are multiplexed with the Intel® DVO interface signals.
  - 82845GL and 82845GV do not support AGP.

Chapter 1 through Chapter 8 describe the 82845G GMCH. The 82845GL GMCH and 82845GV GMCH are described in Chapter 9.

1.1 Terminology

Term	Description
Accelerated Graphics Port (AGP)	This refers to the AGP/PCI_B interface on the GMCH. The GMCH AGP interface supports only 1.5 V *Accelerated Graphics Port Interface, Specification 2.0*-compliant devices using PCI (66 MHz), AGP 1X (66 MHz), 2X (133 MT/s) and 4X (266 MT/s) transfers. The GMCH does NOT support 3.3 V devices. PIPE# and SBA addressing cycles and their associated data phases are generally referred to as AGP transactions. FRAME# cycles are generally referred to as AGP/PCI transactions.
AGP/PCI	AGP/PCI in the document refers to AGP/PCI_B.
Chipset Core	The GMCH internal base logic.
DDR	Double Data Rate SDRAM.
Full Reset	A Full GMCH Reset is defined in this document when RSTIN# is asserted.
GART	Graphics Aperture Re-Map Table. Table in memory containing the page re-map information used during AGP aperture address translations.
GMCH	The Graphics and Memory Controller Hub (GMCH) component contains the processor interface, SDRAM controller, AGP interface, and an integrated 3D/2D/display graphics core. It communicates with the I/O Controller Hub 4 (ICH4) over a proprietary interconnect called the hub interface.

Term	Description
Graphics Core	The internal graphics related logic in the GMCH. Also known as the Integrated Graphics Device (IGD).
HI	Hub Interface. The proprietary hub interconnect that ties the GMCH to the ICH4. In this document HI cycles originating from or destined for the primary PCI interface on the ICH4 are generally referred to as HI/PCI or simply HI cycles.
Host	This term is used synonymously with processor or CPU.
Intel® ICH4	Fourth generation I/O Controller Hub component.
IGD	Integrated Graphics Device. Graphics device integrated into the GMCH.
LVTTL	Low Voltage TTL 3.3 V (SDR).
Primary PCI	The physical PCI bus that is driven directly by the ICH4 component. Communication between the PCI and the GMCH occurs over the hub interface. Note that even though the Primary PCI bus is referred to as PCI, it is not PCI Bus #0 from a configuration standpoint.
PSB	Processor System Bus. This is the bus between the GMCH and processor (also referred to as the Host, FSB, or processor bus).
Scalable Bus	Processor-to-GMCH interface. The Compatible Mode of the Scalable Bus is the P6 bus. The Enhanced Mode of the Scalable Bus is the P6 Bus plus enhancements primarily consisting of source synchronous transfers for address and data, and PSB interrupt delivery. The Intel® Pentium 4 processor implements a subset of Enhanced Mode.
SDR	Single Data Rate SDRAM.
SDRAM	Synchronous Dynamic Random Access Memory.
Secondary PCI	The physical PCI interface that is a subset of the AGP bus driven directly by the GMCH. It supports a subset of 32-bit, 66 MHz *PCI Local Bus Specification, Revision 2.1*-compliant components, but only at 1.5 V (not 3.3 V or 5 V).
SSTL_2	Stub Series Terminated Logic for 2.5 V (DDR).

1.2 Related Documents

Document	Document Number/ Location
Intel® Pentium® 4 Processor in 478-Pin Package and Intel® 845G/845GL/ 82845GV Chipset Platform Design Guide	298654
Intel® 845G/845GL/845GV Chipset Thermal Design Guide	298655
Intel® 82801DB I/O Controller Hub 4 (ICH4) Datasheet	290744
Intel® Pentium® 4 Processor in the 478-Pin Package Datasheet	249887
JEDEC Double Data Rate (DDR) SDRAM Specification	www.jedec.org
Intel® PC SDRAM Specification	http://developer.intel.com/ technology/memory/pcsdram/ spec/index.htm
Accelerated Graphics Port Interface Specification, Revision 2.0	http://www.intel.com/technology/ agp/agp_index.htm
Digital Visual Interface (DVI) Specification, Revision 1.0	

NOTE: For additional related documents, refer to the *Intel® Pentium® 4 Processor in 478-Pin Package and Intel® 845G/845GL/845GV Chipset Platform Design Guide*.

1.3 Intel® 845G Chipset System Overview

Figure 1-1 shows an example block diagram of an 845G chipset-based platform. The 845G chipset is designed for use in a desktop system based on an Intel® Pentium® 4 processor in a 478-pin package. The 845G chipset supports the Pentium 4 processor with 256-KB L2 cache and the Pentium 4 processor with 512-KB L2 cache on 0.13 micron process. The processor interface supports the Pentium 4 processor subset of the Extended Mode of the Scalable Bus Protocol. In an 845G chipset-based platform, I/O functions are integrated onto the ICH4.

The chipset platform supports either the integrated graphics device (IGD) on the GMCH or an external graphics device on AGP. The IGD has 3D, 2D, and video capabilities. The IGD also has two multiplexed Intel DVO ports to support DVO devices. The GMCH's AGP interface supports 1X/2X/4X AGP data transfers and 2X/4X AGP Fast Writes, as defined in the *Accelerated Graphics Port Interface Specification, Revision 2.0* for 1.5 V signaling.

In an 845G chipset, system memory can be either a single channel of SDR (Single Data Rate) SDRAM or DDR (Double Data Rate) SDRAM, with a 64-bit wide data bus. The system memory size can be up to 2 GB.

Section 1.4 provides an overview of the GMCH. The following sub-section provides an overview of the ICH4.

Intel® 82801DB I/O Controller Hub 4 (ICH4)

The ICH4 is a highly integrated multifunctional I/O Controller Hub that provides the interface to the PCI Bus and integrates many of the functions needed in today's PC platforms. The GMCH and ICH4 communicate over a dedicated hub interface. The 82801DB ICH4 functions and capabilities include:

- PCI Rev 2.2 compliant with support for 33 MHz PCI operations
- Supports up to 6 Request/Grant pairs (PCI slots)
- Power management logic support
- Enhanced DMA controller, interrupt controller, and timer functions
- Integrated IDE controller; Ultra ATA/100/66/33
- USB host interface; 3 host controllers and supports 6 USB ports; includes a EHCI high-speed 2.0 USB controller
- Integrated LAN controller
- System Management Bus (SMBus) compatible with most I^2C devices; ICH4 has both bus master and slave capability
- AC '97 2.3 supported for audio and telephony codecs; up to 6 channels
- Low Pin Count (LPC) interface
- FWH Interface (FWH Flash BIOS support)
- Alert on LAN* (AOL and AOL2)

Figure 1-1. Intel® 845G Chipset System Block Diagram

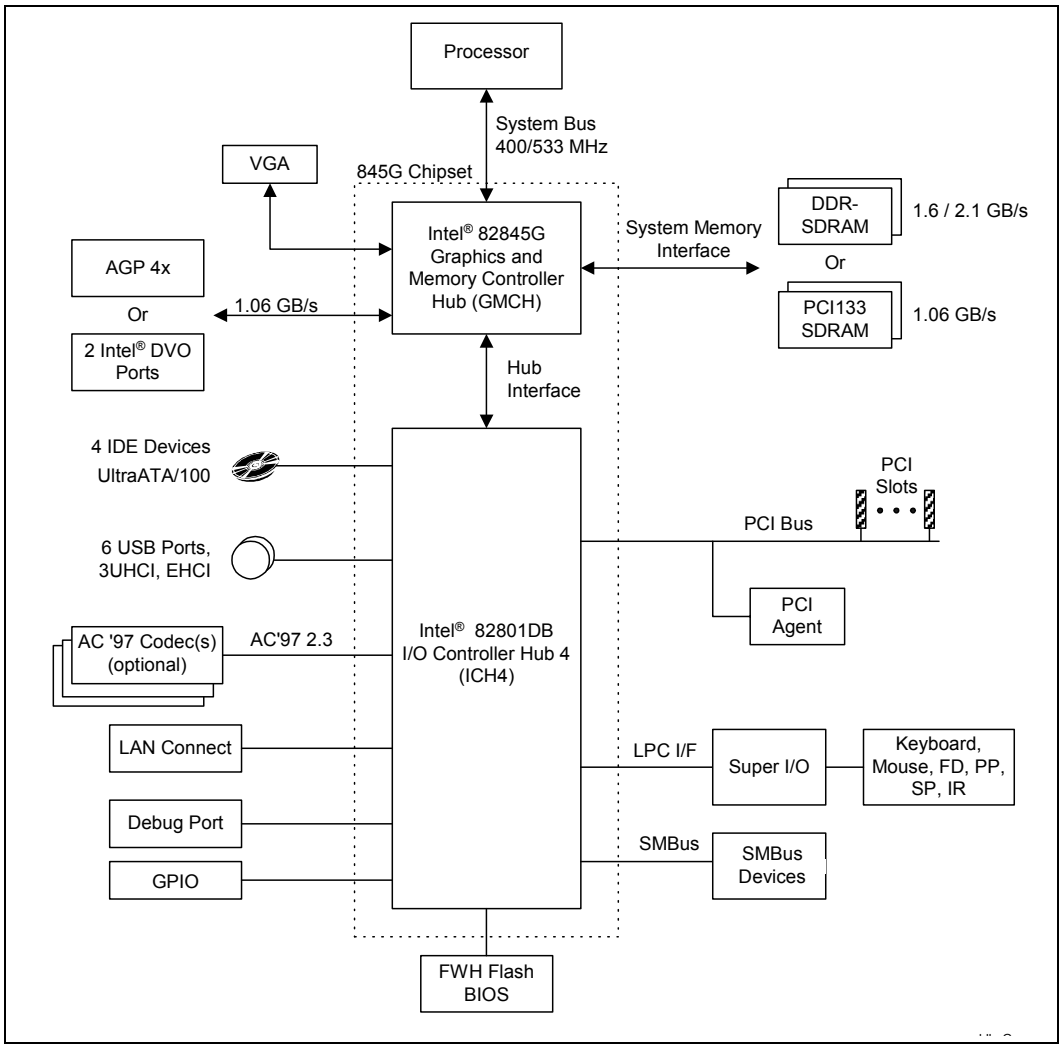

1.4 Intel® 82845G GMCH Overview

The GMCH provides the processor interface, SDRAM interface, AGP interface, hub interface, and integrated graphics with several display interfaces.

1.4.1 Host Interface

The GMCH supports a single mPGA 478 processor with PSB frequencies of 400 MHz (100 MHz HCLK) / 533 MHz (133 MHz HCLK) and it also supports Hyper-Threading Technology. The GMCH uses a scalable PSB VTT between 1.15 V and 1.75 V and on-die termination.

The GMCH supports 32-bit host addressing (decoding up to 4 GB of the processor's memory address space). Host-initiated I/O cycles are decoded to the AGP/PCI_B, hub interface or GMCH configuration space. Host-initiated memory cycles are decoded to AGP/PCI_B, the hub interface, or system memory. All memory accesses from the host interface that hit the graphics aperture are translated using an AGP address translation table. AGP/PCI_B device accesses to non-cacheable system memory are not snooped on the host bus. Memory accesses initiated from AGP/PCI_B using PCI semantics and from the hub interface to system memory are snooped on the host bus.

1.4.2 System Memory Interface

The GMCH supports either a single channel of SDR (Single Data Rate) SDRAM or DDR (Double Data Rate) SDRAM. The channel can be either DDR 200/266 SDRAM memory or SDR PC133 SDRAM memory, with a 64-bit wide interface. Two DIMMs are supported in each configuration. The system memory signals for DDR are multiplexed with signals for SDR. When DDR mode is selected, the memory buffers support the SSTL_2 signal interface. When SDR mode is selected, the memory buffers support the LVTTL signal interface. The memory controller interface is fully configurable through a set of control registers.

The memory interface supports 64-Mb, 128-Mb, 256-Mb, and 512-Mb (megabit) SDRAM technologies. Using 512-Mb SDRAM technology, up to 2 GB of DDR or SDR memory is supported. The memory interface supports variable page sizes of 2 KB, 4 KB, 8 KB, and 16 KB. Page size is individually selected by row, and up to 16 simultaneously open pages (four per row) can be supported. Both DDR and SDR configurations support data masking, but do not support ECC. The GMCH supports industry standard DIMMs. Only DIMM configurations defined in the JEDEC DDR Specifications are supported for DDR. The DDR configuration supports non-inverting selective command-per-clock (selective CPC) accesses.

1.4.3 Hub Interface

The hub interface connects the GMCH to the ICH4. Most communication between the GMCH and the ICH4 occurs over this interface. The hub interface runs at 66 MHz/266 MB/s and is powered with 1.5 V.

1.4.4 Multiplexed AGP and Intel® DVO Port Interface

The GMCH multiplexes an AGP interface with two DVO ports. When an external AGP device is installed in the system, the IGD functionality is disabled.

AGP Interface

A single AGP or PCI-66 component or connector (not both) is supported by the GMCH's AGP interface. Support for a single PCI-66 device is limited to the subset supported by the *Accelerated Graphics Port Interface Specification, Revision 2.0*. The AGP/PCI_B buffers operate only in 1.5 V mode and support the AGP 1.5 V Connector. An external graphics accelerator is not a requirement due to the GMCH's integrated graphics capabilities. The BIOS will disable the IGD if an external AGP device is detected.

The AGP/PCI_B interface supports up to 4X AGP signaling and up to 4X Fast Writes. AGP semantic cycles to system DRAM are not snooped on the host bus. PCI semantic cycles to system memory are snooped on the host bus. The GMCH supports PIPE# or SBA_[7:0] AGP address mechanisms, but not both simultaneously. Either the PIPE# or the SBA_[7:0] mechanism must be selected during system initialization. The GMCH contains a 32-deep AGP request queue. High priority accesses are supported.

Multiplexed Intel® DVO Port Interface

The GMCH supports two multiplexed DVO ports that each drive pixel clocks up to 165 MHz. When an AGP connector is present, the GMCH can make use of these digital display channels via an AGP Digital Display card.

1.4.5 Graphics Overview

The GMCH provides an integrated graphics accelerator delivering 3D, 2D and video capabilities. The GMCH contains an extensive set of instructions for 3D operations, BLT and Stretch BLT operations, motion compensation, overlay, and display control. The GMCH's video engines support video conferencing and other video applications. The GMCH does **not** support a dedicated local graphics memory interface, it can only be used in a UMA configuration. In addition, the GMCH supports external graphics accelerators via AGP, but cannot work concurrently with an external AGP graphics device.

High bandwidth access to data is provided through the system memory port. The GMCH can access graphics data located in system memory at 1.0 GB/s (SDR PC133), 1.6 GB/s (DDR200) or 2.2 GB/s (DDR266). The GMCH uses Intel's Direct Memory Execution model to fetch textures from system memory. The GMCH includes a cache controller to avoid frequent memory fetches of recently used texture data.

The GMCH also provides 2D hardware acceleration for block-level transfers of data (BLTs). The BLT engine provides the ability to copy a source block of data to a destination and perform raster operations on the data using a pattern, and/or another destination. Performing these common tasks in hardware reduces processor load; thus, improving performance. The internal graphics device must be disabled when an attached AGP device is used.

The graphics features on the GMCH include:

- **3D Setup and Render Engine**
  - Discrete Triangles, Strips and Fans Support
  - Indexed Vertex and Flexible Vertex Formats
  - Pixel Accurate Fast Scissoring and Clipping Operation
  - Backface Culling Support
  - Supports D3D and OGL Pixelization Rules
  - Anti-Aliased Lines Support
  - Sprite Points Support
- **High Quality Texture Engine**
  - Per Pixel Perspective Corrected Texture Mapping
  - Single Pass Texture Compositing (Multi-Textures) at rate
  - 12 Levels of Detail MIP Map Sizes from 1x1 to 2Kx2K
  - All texture formats including 32-bit RGBA
  - Alpha and Luminance Maps
  - Texture ChromaKeying
  - Bilinear, Trilinear, and Anisotropic MIP-Mapped Filtering
  - Cubic Environment Reflection Mapping
  - Embossed Bump-Mapping
  - DOT3-based Bump-Mapping
  - DXTn Texture Decompression
  - FXT1 Texture Decompression
- **3D Graphics Rasterization Enhancements**
  - 200 MegaPixel/Sec Fill Rate
  - Flat and Gouraud Shading
  - Color Alpha Blending for Transparency
  - Vertex and Programmable Pixel Fog and Atmospheric Effects
  - Color Specular Lighting
  - Z Bias Support
  - Dithering
  - Anti-Aliasied Lines
  - 16- and 24-bit Z Buffering
  - 16- and 24-bit W Buffering
  - 8-bit Stencil Buffering
  - Double and Triple Render Buffer Support
  - 16- and 32-bit Color
  - Destination Alpha
  - Maximum 3D Resolution Supported: 1600x1200x32 at 85 Hz
  - Fast Clear Support
- **2D Graphics**
  - Optimized 256-bit BLT Engine
  - GDI+* Feature Support
  - Alpha Stretch Blitter
  - Anti-Aliased Lines
  - 32-bit Alpha Blended Cursor
  - Programmable 3-Color Transparent Cursor
  - Color Space Conversion
  - 8-, 16- and 32-bit Color
  - ROP Support
- **Video DVD/PC-VCR**
  - Dynamic Bob and Weave Support for Video Streams
  - Synclock Display and TV-out to video source
  - Source Resolution: up to 720x480 with 2-vertical taps
  - Software DVD at 30 fps, Full Screen
- **Video Overlay**
  - Single Scalable Overlay
  - Multiple Overlay Functionality provided via Stretch Blitter (PIP, Video Conferencing, etc.)
  - 5-tap Horizontal, 2-tap Vertical Filtered Scaling
  - Independent Gamma Correction
  - Independent Brightness/Contrast/Saturation
  - Independent Tint/Hue Support
  - Destination Color-keying
  - Source Chroma-keying
  - Maximum Source Resolution: 720x480 (576)
  - Maximum Overlay Display Resolution: 1600x1200x32 at 60 Hz and 1280x1024x32 at 85 Hz

1.4.6 Display Interfaces

The GMCH provides interfaces to a progressive scan analog monitor and two DVOs (multiplexed with AGP) that can drive an ADD card. The digital display channels can drive a variety of DVO devices (e.g., TMDS, LVDS, and TV-Out).

- The GMCH has an integrated 350 MHz RAMDAC that can directly drive a progressive scan analog monitor up to a resolution of 2048x1536 at 60 Hz.
- The GMCH provides two multiplexed DVOs that are can drive a 165 MHz pixel clock. The two DVO ports can be combined to drive larger digital displays.

The GMCH is compliant with the *Digital Visual Interface (DVI) Specification, Revision 1.0* (www.ddwg.org/register/download.htm). When combined with a DVI-compliant external device and connector, the GMCH has a high-speed interface to a digital display (e.g., flat panel or digital CRT).

This page is intentionally left blank.

Signal Description 2

This section provides a detailed description of GMCH signals. The signals are arranged in functional groups according to their associated interface.

The "#" symbol at the end of a signal name indicates that the active, or asserted state occurs when the signal is at a low voltage level. When "#" is not present after the signal name the signal is asserted when at the high voltage level.

The following notations are used to describe the signal type:

I	Input pin
O	Output pin
I/O	Bi-Directional Input/Output pin
s/t/s	Sustained Tri-State. This pin is driven to its inactive state prior to tri-stating.

The signal description also includes the type of buffer used for the particular signal:

AGTL+	Open Drain AGTL+ interface signal. The GMCH integrates AGTL+ termination resistors, and supports Vtt of from 1.15 V to 1.75 V
AGP	AGP interface signals. These signals are compatible with the *Accelerated Graphics Port Interface Specification, Revision 2.0* 1.5 V Signaling Environment DC and AC Specifications. The buffers are not 3.3 V tolerant.
LVTTL	Low Voltage TTL 3.3 V compatible signals
SSTL_2	Stub Series Terminated Logic 2.5 V compatible signals.
CMOS	CMOS buffers.

Host Interface signals that perform multiple transfers per clock cycle may be marked as either "4X" (for signals that are "quad-pumped") or 2X (for signals that are "double-pumped").

Note that processor address and data bus signals are logically inverted signals. In other words, the actual values are inverted of what appears on the processor bus. This must be taken into account and the addresses and data bus signals must be inverted inside the GMCH host bridge. All processor control signals follow normal convention. A 0 indicates an active level (low voltage) if the signal is followed by # symbol and a 1 indicates an active level (high voltage) if the signal has no # suffix.

Figure 2-1. Intel® 82845G GMCH Interface Block Diagram

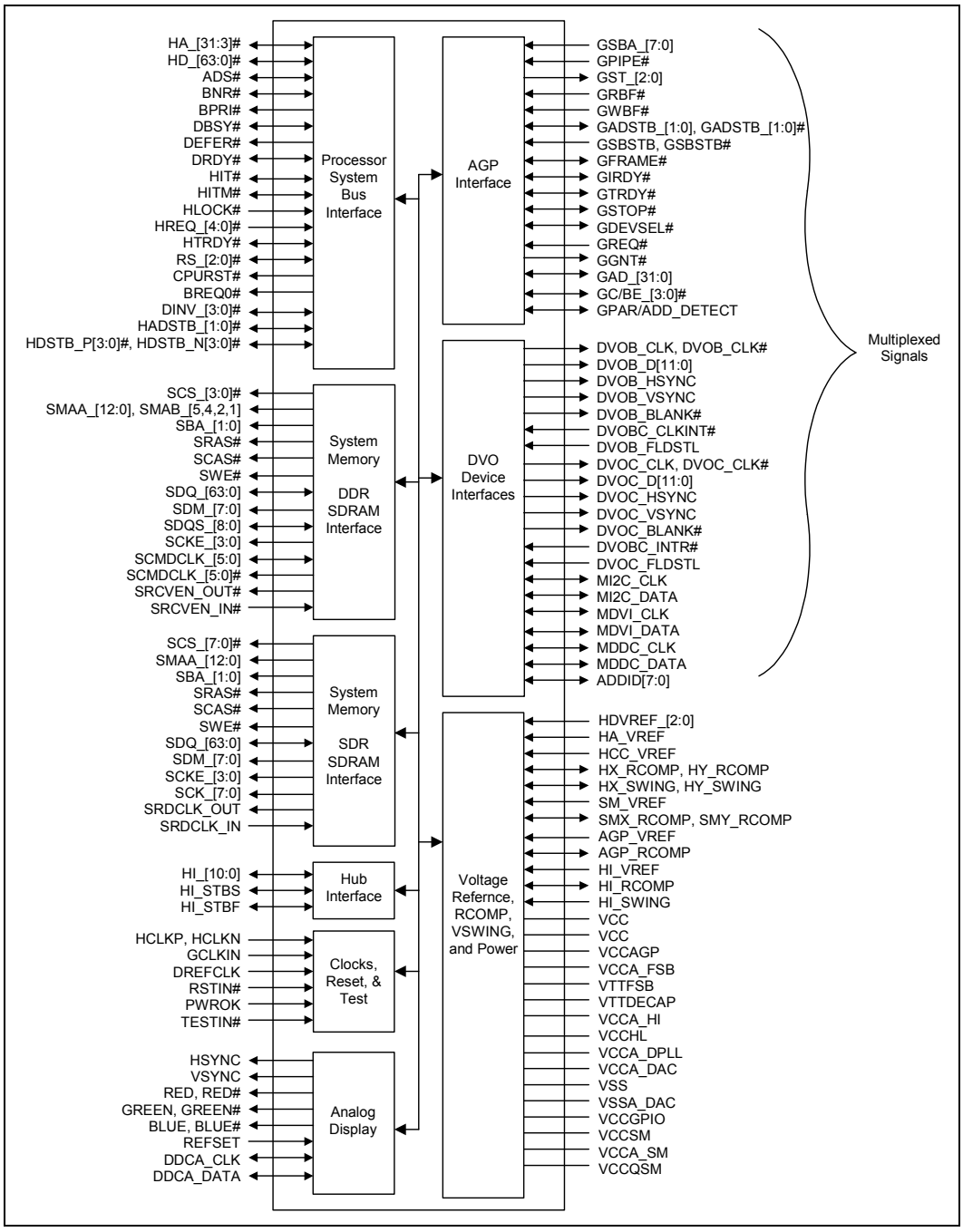

2.1 Host Interface Signals

Signal Name	Type	Description
ADS#	I/O AGTL+	**Address Strobe:** The processor bus owner asserts ADS# to indicate the first of two cycles of a request phase.
BNR#	I/O AGTL+	**Block Next Request:** This signal is used to block the current request bus owner from issuing a new requests. This signal is used to dynamically control the processor bus pipeline depth.
BPRI#	O AGTL+	**Priority Agent Bus Request:** The GMCH is the only Priority Agent on the processor bus. It asserts this signal to obtain the ownership of the address bus. This signal has priority over symmetric bus requests and will cause the current symmetric owner to stop issuing new transactions unless the HLOCK# signal was asserted.
BREQ0#	O AGTL+	**Bus Request 0#:** The GMCH pulls the processor bus' BREQ0# signal low during CPURST#. The signal is sampled by the processor on the active-to-inactive transition of CPURST#. The minimum setup time for this signal is 4HCLKs. The minimum hold time is 2 clocks and the maximum hold time is 20 HCLKs. BREQ0# is terminated high (pulled up) after the hold time requirement has been satisfied.
CPURST#	O AGTL+	**CPU Reset:** The CPURST# pin is an output from the GMCH. The GMCH asserts CPURST# while RSTIN# (PCIRST# from Intel® ICH4) is asserted and for approximately 1 ms after RSTIN# is deasserted. The CPURST# allows the processors to begin execution in a known state.
DBSY#	I/O AGTL+	**Data Bus Busy:** This signal is used by the data bus owner to hold the data bus for transfers requiring more than one cycle.
DEFER#	O AGTL+	**Defer:** This signal, when asserted, indicates that the GMCH will terminate the transaction currently being snooped with either a deferred response or with a retry response.
DINV_[3:0]#	I/O AGTL+ 4X	**Dynamic Bus Inversion:** These signals are driven along with the HD_[63:0]# signals. They indicates if the associated signals are inverted or not. DINV_[3:0]# are asserted such that the number of data bits driven electrically low (low voltage) within the corresponding 16-bit group never exceeds 8. **DINV_[x]#** **Data Bits** DINV_3# HD_[63:48]# DINV_2# HD_[47:32]# DINV_1# HD_[31:16]# DINV_0# HD_[15:0]#
DRDY#	I/O AGTL+	**Data Ready:** DRDY# is asserted for each cycle that data is transferred.
HA_[31:3]#	I/O AGTL+ 2X	**Host Address Bus:** HA_[31:3]# connect to the processor address bus. During processor cycles, HA_[31:3]# are inputs. The GMCH drives HA_[31:3]# during snoop cycles on behalf of the hub interface and AGP/Secondary PCI initiators. HA_[31:3]# are transferred at 2X rate. Note that the address is inverted on the processor bus.
HADSTB_[1:0]#	I/O AGTL+ 2X	**Host Address Strobe:** HADSTB_[1:0]# are the source synchronous strobes used to transfer HA[31:3]# and HREQ_[4:0]# at the 2X transfer rate. **Strobe** **Address Bits** HADSTB_0# A[16:3]#, REQ[_4:0]# HADSTB_1# A[31:17]#
HD_[63:0]#	I/O AGTL+ 4X	**Host Data:** These signals are connected to the processor data bus. Data on HD_[63:0]# is transferred at a 4X rate. Note that the data signals may be inverted on the processor bus.

Signal Name	Type	Description
HDSTB_P[3:0]# HDSTB_N[3:0]#	I/O AGTL+	**Differential Host Data Strobes:** HDSTB_P[3:0]# and HDSTB_N[3:0]# are the differential source synchronous strobes used to transfer HD_[63:0]# and DINV_[3:0]# at the 4X transfer rate. **Strobe** — **Data Bits** HDSTB_P3#, HDSTB_N3# — HD_[63:48]#, DINV_3# HDSTB_P2#, HDSTB_N2# — HD_[47:32]#, DINV_2# HDSTB_P1#, HDSTB_N1# — HD_[31:16]#, DINV_1# HDSTB_P0#, HDSTB_N0# — HD_[15:0]#, DINV_0#
HIT#	I/O AGTL+	**Hit:** This signal indicates that a caching agent holds an unmodified version of the requested line. Also, driven in conjunction with HITM# by the target to extend the snoop window.
HITM#	I/O AGTL+	**Hit Modified:** This signal indicates that a caching agent holds a modified version of the requested line and that this agent assumes responsibility for providing the line. HITM# is also driven in conjunction with HIT# to extend the snoop window.
HLOCK#	I AGTL+	**Host Lock:** All processor bus cycles sampled with the assertion of HLOCK# and ADS#, until the negation of HLOCK# must be atomic (i.e., no hub interface or AGP snoopable access to SDRAM are allowed when HLOCK# is asserted by the processor).
HREQ_[4:0]#	I/O AGTL+ 2X	**Host Request Command:** These signals define the attributes of the request. HREQ_[4:0]# are transferred at 2X rate. They are asserted by the requesting agent during both halves of Request Phase. In the first half the signals define the transaction type to a level of detail that is sufficient to begin a snoop request. In the second half the signals carry additional information to define the complete transaction type. The transactions supported by the GMCH Host Bridge are defined in Section 4.1.
HTRDY#	O AGTL+	**Host Target Ready:** This signal indicates that the target of the processor transaction is able to enter the data transfer phase.
RS_[2:0]#	O AGTL+	**Response Signals:** RS_[2:0]# indicate the type of response according to the encoding below: 000 = Idle state 001 = Retry response 010 = Deferred response 011 = Reserved (not driven by GMCH) 100 = Hard Failure (not driven by GMCH) 101 = No data response 110 = Implicit Writeback 111 = Normal data response

2.2 Memory Interface

2.2.1 DDR SDRAM Interface

Signal Name	Type	Description
SCMDCLK_[5:0]	O SSTL_2	**Differential DDR Clock:** SCMDCLK and SCMDCLK# pairs are differential clock outputs. The crossing of the positive edge of SCMDCLK and the negative edge of SCMDCLK# is used to sample the address and control signals on the SDRAM. There are 3 pairs to each DIMM.
SCMDCLK_[5:0]#	O SSTL_2	**Complementary Differential DDR Clock:** These are the complementary Differential DDR Clock signals.
SCS_[3:0]#	O SSTL_2	**Chip Select:** These signals select particular SDRAM components during the active state. There is one SCS# for each SDRAM row, toggled on the positive edge of SCMDCLK.
SMAA_[12:0], SMAB_[5,4,2,1]	O SSTL_2	**Memory Address:** These signals provide the multiplexed row and column address to the SDRAM. SMAB_[5,4,2,1] signals are selective CPC signals and are identical to SMAA_[5,4,2,1].
SBA[1:0]	O SSTL_2	**Bank Select (Bank Address):** These signals define which banks are selected within each SDRAM row. Bank select and memory address signals combine to address every possible location within an SDRAM device.
SRAS#	O SSTL_2	**Row Address Strobe:** SRAS# is used with SCAS# and SWE# (along with SCS#) to define the SDRAM commands.
SCAS#	O SSTL_2	**Column Address Strobe:** SCAS# is used with SRAS# and SWE# (along with SCS#) to define the SDRAM commands.
SWE#	O SSTL_2	**Write Enable:** SWE# is used with SCAS# and SRAS# (along with SCS#) to define the SDRAM commands.
SDQ_[63:0]	I/O SSTL_2	**Data Lines:** SDQ_[63:0] interface to the SDRAM data bus.
SDM_[7:0]	O SSTL_2	**Data Mask:** When activated during writes, the corresponding data groups in the SDRAM are masked. There is one SDM for every eight data lines. SDM can be sampled on both edges of the data strobes.
SDQS_[7:0]	I/O SSTL_2	**Data Strobes:** Data strobes are used for capturing data. During writes, SDQS is centered in data. During reads, SDQS is edge aligned with data. The following list matches the data strobe with the data bytes. SDQS_7 = SDQ_[63:56] SDQS_6 = SDQ_[55:48] SDQS_5 = SDQ_[47:40] SDQS_4 = SDQ_[39:32] SDQS_3 = SDQ_[31:24] SDQS_2 = SDQ_[23:16] SDQS_1 = SDQ_[15:8] SDQS_0 = SDQ_[7:0]
SCKE_[3:0]	O SSTL_2	**Clock Enable:** SCKE is used to initialize DDR SDRAM during power-up and to place all SDRAM rows into and out of self-refresh during Suspend-to-RAM. SCKE is also used to dynamically power down inactive SDRAM rows. There is one SCKE per SDRAM row, toggled on the positive edge of SCMD_CLK.
SRCVEN_OUT#	O SSTL_2	**Receive Enable Out:** This signal is a feedback testpoint signal used to enable the DQS input buffers during reads. This pin should be connect to SRCVEN_IN through an **un-populated** backside resistor site.
SRCVEN_IN#	I SSTL_2	**Receive Enable In:** This signal is a feedback testpoint signal used to enable the DQS input buffers during reads.

2.2.2 SDR SDRAM Interface

The SDR interface signals are multiplexed with the DDR signals. At power up the functional strap setting on MEMSEL determines whether the memory interface is set up for DDR or SDR. The DDR-to-SDR signal mapping is provided in Table 2-1.

Signal Name	Type	Description
SCK_[7:0]	O LVTTL	**SDR System Memory Clock:** These signals provide the 133 MHz SDRAM clocks for the DIMMs. Note that there are two SCK per SDRAM row.
SCS_[7:0]#	O LVTTL	**Chip Select:** These pins select the particular SDRAM components during the active state. Note that there are two SCS# per SDRAM row. These signals can be toggled on every rising system memory clock edge.
SMAA_[12:0]	O LVTTL	**Memory Address:** These signals provide the multiplexed row and column address to SDRAM.
SBA_[1:0]	O LVTTL	**Bank Select (Bank Address):** The bank select signals and memory address signals combine to address every possible location within an SDRAM device.
SRAS#	O LVTTL	**Row Address Strobe:** SRAS# is used with SCAS# and SWE# (along with SCS#) to define the SDRAM commands.
SCAS#	O LVTTL	**Column Address Strobe:** SCAS# is used with SRAS# and SWE# (along with SCS#) to define the SDRAM commands.
SWE#	O LVTTL	**Write Enable:** SWE# is used with SCAS# and SRAS# (along with SCS#) to define the SDRAM commands.
SDQ_[63:0]	I/O LVTTL	**Data Lines:** SDQ_[63:0] interface to the SDRAM data bus.
SDM_[7:0]	O LVTTL	**Data Mask:** When activated during writes, the corresponding data groups in the SDRAM are masked. There is one SDM for every eight data lines.
SCKE_[3:0]	O LVTTL	**Clock Enable:** These signals are used for placing all SDRAM rows into and out of self-refresh during Suspend-to-RAM. SCKE is also used to dynamically power down inactive SDRAM rows. There is one SCKE per SDRAM row.
SRDCLK_OUT	O LVTTL	**Read Clock Out:** Feedback testpoint signal used to emulate source-synch clocking for reads. This pin should be connect to SRDCLK_IN through an **un-populated** backside resistor site.
SRDCLK_IN	I LVTTL	**Read Clock Input:** Feedback testpoint signal used to emulate source-synch clocking for reads.

Table 2-1. DDR-to-SDR Signal Mapping (Sheet 1 of 3)

DDR Ball Name	SDR Ball Name	Ball #
SMXRCOMP	SMXRCOMP	AF10
SMYRCOMP	SMYRCOMP	AJ34
SDQ_59	SDQ_63	AJ36
SCKE_2	SWE#	AK14
SMAA_9	SCS_4#	AK16
SMAB_5	SCS_0#	AK18
SMAA_3	SMAA_0	AK20
SCMDCLK_0#	SMAA_5	AK22
SRCVEN_OUT#	SRCVEN_OUT#	AK24
SMAA_10	SBA_0	AK26

DDR Ball Name	SDR Ball Name	Ball #
SWE#	SCKE_3	AP29
SDQ_5	SDQ_1	AP3
SDQ_43	SDQ_54	AP30
SCS_1#	SCS_6#	AP31
SDQ_52	SDQ_24	AP32
SCMDCLK_5	SCMDCLK_2	AP33
SDQ_54	SDQ_57	AP34
SDQ_51	SDQ_27	AP35
SDQ_60	SDQ_59	AP36
SDM_0	SDQ_2	AP4

Table 2-1. DDR-to-SDR Signal Mapping (Sheet 2 of 3)

DDR Ball Name	SDR Ball Name	Ball #
SRAS#	SCKE_0	AK28
SCS_2#	SCS_3#	AK30
SDQ_63	SDQ_31	AK34
SDQ_62	SDQ_30	AK35
SDQ_58	SDQ_62	AK36
SCKE_3	SCAS#	AL13
SMAA_11	SCS_5#	AL15
SMAA_5	SRAS#	AL17
SMAA_4	SMAA_3	AL19
SCMDCLK_0	SMAA_4	AL21
SRCVEN_IN#	SRCVEN_IN#	AL23
SMAA_0	SMAA_10	AL25
SCS_0#	SCS_2#	AL29
SCMDCLK_2#	SCMDCLK_7	AL33
SDM_7	SDQ_29	AL34
SDQS_7	Reserved	AL36
SM_VREF	SM_VREF	AM2
SCMDCLK_2	SCMDCLK_6	AM34
SDQ_61	SDQ_28	AM35
SDQ_57	SDQ_61	AM36
SCMDCLK_1	SCMDCLK_4	AN11
SCKE_1	Reserved	AN13
SMAA_12	SCS_1#	AN15
SMAA_8	Reserved	AN17
SMAB_4	SMAA_2	AN19
SDQ_4	SDQ_32	AN4
SCMDCLK_3#	SMAA_7	AN21
SMAB_2	SMAA_9	AN23
SMAA_1	SMAA_11	AN25
SBA_0	SCKE_2	AN27
SCAS#	SCKE_1	AN29
SCS_3#	SCS_7#	AN31
SCMDCLK_5#	SCMDCLK_3	AN34
SDQ_56	SDQ_60	AN36
SDQ_0	SDQ_0	AN4
SCMDCLK_4#	SCMDCLK_1	AN9
SDQ_16	SDQ_9	AP10
SCMDCLK_1#	SCMDCLK_5	AP11
SDM_2	SDQ_43	AP12

DDR Ball Name	SDR Ball Name	Ball #
SDQ_3	SDQ_4	AP5
SDQ_13	SDQ_6	AP6
SDQ_15	SDQ_39	AP8
SCMDCLK_4	SCMDCLK_0	AP9
SDQ_11	SDQ_40	AR10
SDQ_21	SDQ_42	AR12
SDQ_22	SDQ_12	AR14
SDQ_28	SDQ_46	AR16
SDM_3	SDQ_15	AR18
SDQS_0	Reserved	AR2
SDQ_31	SDM_5	AR20
SDQ_32	SDM_2	AR22
SDQS_4	Reserved	AR24
SDQ_39	SDQ_49	AR26
SDQ_45	SDQ_51	AR28
SDQ_42	SDQ_53	AR30
SDQ_48	SDQ_55	AR32
SDM_6	SDQ_25	AR34
SDQ_50	SDQ_58	AR36
SDQ_6	SDQ_3	AR4
SDQ_9	SDQ_5	AR6
SDM_1	SDQ_38	AR8
SDQ_20	SDQ_41	AT10
SDQ_17	SDQ_10	AT11
SDQS_2	Reserved	AT12
SDQ_18	SDQ_11	AT13
SDQ_19	SDQ_44	AT14
SDQ_24	SDQ_13	AT15
SDQ_29	SDQ_14	AT16
SDQS_3	Reserved	AT17
SDQ_26	SDM_0	AT18
SDQ_27	SDM_1	AT19
SDQ_36	SDM_6	AT22
SDQ_37	SDM_7	AT23
SDM_4	SDQ_16	AT24
SDQ_38	SDQ_17	AT25
SDQ_35	SDQ_18	AT26
SDQ_44	SDQ_19	AT27
SDQ_41	SDQ_20	AT28

Table 2-1. DDR-to-SDR Signal Mapping (Sheet 3 of 3)

DDR Ball Name	SDR Ball Name	Ball #
SCKE_0	Reserved	AP13
SDQ_23	SDQ_45	AP14
SDQ_25	SDQ_47	AP16
SMAA_7	SMAA_1	AP17
SDQ_30	SDM_4	AP18
SMAA_6	Reserved	AP19
SDQ_1	SDQ_33	AP2
SCMDCLK_3	SMAA_6	AP21
SDQ_33	SDM_3	AP22
SMAA_2	SMAA_8	AP23
SDQ_34	SDQ_48	AP24
SMAB_1	SBA_1	AP25
SDQ_40	SDQ_50	AP26
SBA_1	SMAA_12	AP27
SDM_5	SDQ_52	AP28

DDR Ball Name	SDR Ball Name	Ball #
SDQS_5	Reserved	AP29
SDQ_2	SDQ_34	AT3
SDQ_46	SDQ_21	AT30
SDQ_47	SDQ_22	AT31
SDQ_49	SDQ_23	AT32
SDQ_53	SDQ_56	AT33
SDQS_6	Reserved	AT34
SDQ_55	SDQ_26	AT35
SDQ_7	SDQ_35	AT4
SDQ_8	SDQ_36	AT5
SDQ_12	SDQ_37	AT6
SDQS_1	Reserved	AT7
SDQ_14	SDQ_7	AT8
SDQ_10	SDQ_8	AT9

2.3 Hub Interface

Signal Name	Type	Description
HI_[10:0]	I/O sts	**Hub Interface Signals:** HI[10:0] are used for the hub Interface.
HI_STBS	I/O sts	**Hub Interface Strobe:** HI_STBS is one of two differential strobe signals used to transmit or receive packet data over the hub Interface.
HI_STBF	I/O sts	**Hub Interface Strobe Complement:** HI_STBF is one of two differential strobe signals used to transmit or receive packet data over the hub Interface.

2.4 AGP Interface Signals

2.4.1 AGP Addressing Signals

Signal Name	Type	Description
GPIPE#	I AGP	**Pipelined Read:** This signal is asserted by the current master to indicate a full width address is to be queued by the target. The master queues one request each rising clock edge while GPIPE# is asserted. When GPIPE# is deasserted, no new requests are queued across the GAD bus. GPIPE# is a sustained tri-state signal from the master (graphics controller) and is an input to the GMCH.
GSBA[7:0]	I AGP	**Sideband Address:** This bus provides an additional bus to pass addresses and commands to the GMCH from the AGP master.

Note: The above table contains two mechanisms to queue requests by the AGP master. Note that the master can only use one mechanism. When PIPE# is used to queue addresses, the master is not allowed to queue addresses using the sideband (SB) bus. During configuration time, if the master indicates that it can use either mechanism, the configuration software indicates which mechanism the master will use. Once this choice has been made, the master continues to use the mechanism selected until the master is reset (and reprogrammed) to use the other mode. This change of modes is not a dynamic mechanism but rather a static decision when the device is first being configured after reset.

2.4.2 AGP Flow Control Signals

Signal Name	Type	Description
GRBF#	I AGP	**Read Buffer Full:** This signal indicates if the master is ready to accept previously requested low priority read data. When GRBF# is asserted, the GMCH is not allowed to return low priority read data to the AGP master. GRBF# is only sampled at the beginning of a cycle. If the AGP master is always ready to accept return read data, it is not required to implement this signal.
GWBF#	I AGP	**Write Buffer Full:** This signal indicates if the master is ready to accept fast write data from the GMCH. When GWBF# is asserted, the GMCH is not allowed to drive fast write data to the AGP master. GWBF# is only sampled at the beginning of a cycle. If the AGP master is always ready to accept fast write data, it is not required to implement this signal.

2.4.3 AGP Status Signals

Signal Name	Type	Description
GST_[2:0]	O AGP	**Status:** GST_[2:0] provide information from the arbiter to an AGP Master on what it may do. GST_[2:0] only have meaning to the master when its GGNT# is asserted. When GGNT# is deasserted, these signals have no meaning and must be ignored. GST_[2:0] are always an output from the GMCH and an input to the master. 000 = Previously requested low priority read data is being returned to the master 001 = Previously requested high priority read data is being returned to the master. 010 = The master is to provide low priority write data for a previously queued Write command. 011 = The master is to provide high priority write data for a previously queued Write command. 100 = Reserved 101 = Reserved 110 = Reserved 111= The master has been given permission to start a bus transaction. The master may queue AGP requests by asserting PIPE# or start a PCI transaction by asserting FRAME#.

2.4.4 AGP Strobes

Signal Name	Type	Description
GADSTB_0	I/O (s/t/s) AGP	**GAD Bus Strobe-0:** This signal provides timing for 2X and 4X clocked data on GAD_[15:0] and GC/BE_[1:0]#. The agent that is providing data drives this signal.
GADSTB_0#	I/O (s/t/s) AGP	**GAD Bus Strobe-0 Complement:** GADSTB_0# is the differential complement to the GAD_STB_0 signal. It is used to provide timing for 4X clocked data.
GADSTB_1	I/O (s/t/s) AGP	**GAD Bus Strobe-1:** This signal provides timing for 2X and 4X clocked data on GAD_[31:16] and GC/BE_[3:2]#. The agent that is providing data drives this signal.
GADSTB_1#	I/O (s/t/s) AGP	**GAD Bus Strobe-1 Complement:** GADSTB_1# is the differential complement to the GADSTB_1 signal. It is used to provide timing for 4X clocked data.
GSBSTB	I AGP	**Sideband Strobe:** This signal provides timing for 2X and 4X clocked data on the GSBA[7:0] bus. It is driven by the AGP master after the system has been configured for 2X or 4X clocked sideband address delivery.
GSBSTB#	I AGP	**Sideband Strobe Complement:** GSBSTB# is the differential complement to the GSBSTB signal. It is used to provide timing for 4X clocked data.

2.4.5 PCI Signals–AGP Semantics

PCI signals are redefined when used in AGP transactions carried using AGP protocol extension. For transactions on the AGP interface carried using PCI protocol, these signals completely preserve *PCI Local Bus Specification, Revision 2.1* semantics. The exact roles of all PCI signals during AGP transactions are defined below.

Signal Name	Type	Description
GFRAME#	I/O s/t/s AGP	**Frame:** GFRAME# is an output from the GMCH during Fast Writes.
GIRDY#	I/O s/t/s AGP	**Initiator Ready:** GIRDY# indicates the AGP compliant master is ready to provide all write data for the current transaction. Once GIRDY# is asserted for a write operation, the master is not allowed to insert wait states. The assertion of GIRDY# for reads indicates that the master is ready to transfer to a subsequent block (4 clocks) of read data. The master is **never** allowed to insert a wait state during the initial data transfer (first 4 clocks) of a read transaction. However, it may insert wait states after each 4 clock block is transferred. **NOTE:** There is no GFRAME# – GIRDY# relationship for AGP transactions.
GTRDY#	I/O s/t/s AGP	**Target Ready:** GTRDY# indicates the AGP compliant target is ready to provide read data for the entire transaction (when the transfer size is less than or equal to 4 clocks) or is ready to transfer the initial or subsequent block (four clocks) of data when the transfer size is greater than four clocks. The target is allowed to insert wait-states after each block (four clocks) is transferred on both read and write transactions.
GSTOP#	I/O s/t/s AGP	**Stop:** Same as PCI. Not used by AGP.
GDEVSEL#	I/O s/t/s AGP	**Device Select:** Same as PCI. Not used by AGP.
GREQ#	I AGP	**Request:** Same as PCI. This signal is used to request access to the bus to initiate a PCI or AGP request.
GGNT#	O AGP	**Grant:** Same meaning as PCI but additional information is provided on GST[2:0]. The additional information indicates that the selected master is the recipient of previously requested read data (high or normal priority); it is to provide write data (high or normal priority), for a previously queued write command or has been given permission to start a bus transaction (AGP or PCI).
GAD_[31:0]	I/O AGP	**Address:** Same as PCI.
GC/BE_[3:0]#	I/O AGP	**Command/Byte Enable:** These signals have a slightly different meaning for AGP. Provides command information (different commands than PCI) when requests are being queued when using GPIPE#. Provide valid byte information during AGP write transactions and are not used during the return of read data.
GPAR/ ADD_DETECT	I/O AGP	**PAR:** Same as PCI. Not used on AGP transactions but used during PCI transactions as defined by the *PCI Local Bus Specification, Revision 2.1.* **ADD_DETECT:** The 82845G GMCH multiplexes an ADD_DETECT signal with the GPAR signal on the AGP bus. This signal acts as a strap and indicates whether the interface is in AGP or DVO mode. The 82845G GMCH has an internal pull-up on this signal that will naturally pull it high. If an ADD card is present, the signal will be pulled low on the ADD card and the AGP/DVO multiplex select bit in the GMCHCFG register will be set to DVO mode. Motherboards that use this interface in a DVO down scenario (no AGP connector) should have a pull-down resistor on ADD_DETECT.

NOTES:
1. PCIRST# from the ICH4 is connected to RSTIN# and is used to reset AGP interface logic within the GMCH. The AGP agent will also typically use PCIRST# provided by the ICH4 as an input to reset its internal logic.
2. The LOCK# signal is **not** supported on the AGP Interface (even for PCI operations).
3. The PERR# and SERR# signals are **not** supported on the AGP interface.

2.4.6 PCI Pins during PCI Transactions on AGP Interface

The PCI signals described in Section 2.4.5 behave according to *PCI Local Bus Specification, Revision 2.1*, when used to perform PCI transactions on the AGP Interface.

2.5 Multiplexed Intel® DVO Device Signal Interfaces

The DVO signals, described in the following table, are multiplexed with the AGP signals.

Name	Type	Description
DVOB_CLK; DVOB_CLK#	O AGP	**DVOB Clock Output:** These signals provide a differential pair reference clock that can run up to 165 MHz. Formerly known by: DVOB_CLKOUT0=DVOB_CLK and DVOB_CLKOUT1=DVOB_CLK#. Care should be taken to be sure that DVOB_CLK is connected to the primary clock receiver of the Intel® DVO device.
DVOB_D[11:0]	O AGP	**DVOB Data:** This data bus is used to drive 12-bit pixel data on each edge of DVOB_CLK(#). This provides 24 bits of data per clock.
DVOB_HSYNC	O AGP	**Horizontal Sync:** This is the HSYNC signal for the DVOB interface. The active polarity of the signal is programmable.
DVOB_VSYNC	O AGP	**Vertical Sync:** This is the VSYNC signal for the DVOB interface. The active polarity of the signal is programmable.
DVOB_BLANK#	O AGP	**Flicker Blank or Border Period Indication:** DVOB_BLANK# is a programmable output pin driven by the GMCH. When programmed as a blank period indication, this pin indicates active pixels excluding the border. When programmed as a border period indication, this pin indicates active pixel including the border pixels.
DVOBC_CLKINT#	I AGP	**DVOBC Pixel Clock Input/Interrupt:** This signal may be selected as the reference input to the dot clock PLL (DPLL) for the multiplexed DVO devices. This pin may also be programmed to be an interrupt input for either of the multiplexed DVO devices.
DVOB_FLDSTL	I AGP	**TV Field and Flat Panel Stall Signal:** This input can be programmed to be either a TV Field input from the TV encoder or Stall input from the flat panel. When used as a Field input, it synchronizes the overlay field with the TV encoder field when the overlay is displaying an interleaved source. When used as the Stall input, it indicates that the pixel pipeline should stall one horizontal line. The polarity is programmable for both modes and the input may be disabled completely.
DVOC_CLK; DVOC_CLK#	O AGP	**DVOC Clock Output:** These pins provide a differential pair reference clock that can run up to 165 MHz. Formerly known by: DVOC_CLKOUT0=DVOC_CLK and DVOC_CLKOUT1=DVOC_CLK#. Care should be taken to be sure that DVOC_CLK is connected to the primary clock receiver of the DVO device.
DVOC_D[11:0]	O AGP	**DVOC Data:** This data bus is used to drive 12-bit pixel data on each edge of DVOC_CLK(#). This provides 24 bits of data per clock.
DVOC_HSYNC	O AGP	**Horizontal Sync:** This is the HSYNC signal for the DVOC interface. The active polarity of the signal is programmable.
DVOC_VSYNC	O AGP	**Vertical Sync:** This is the VSYNC signal for the DVOC interface. The active polarity of the signal is programmable.
DVOC_BLANK#	O AGP	**Flicker Blank or Border Period Indication:** DVOC_BLANK# is a programmable output pin driven by the GMCH. When programmed as a blank period indication, this signal indicates active pixels excluding the border. When programmed as a border period indication, this signal indicates active pixel including the border pixels.

Name	Type	Description
DVOBC_INTR#	I AGP	**DVOBC Interrupt:** This signal may be used as an interrupt input for either of the multiplexed DVO devices.
DVOC_FLDSTL	I AGP	**TV Field and Flat Panel Stall Signal:** This input can be programmed to be either a TV Field input from the TV encoder or Stall input from the flat panel. When used as a Field input, it synchronizes the overlay field with the TV encoder field when the overlay is displaying an interleaved source. When used as the Stall input, it indicates that the pixel pipeline should stall one horizontal line. The polarity is programmable for both modes and the input may be disabled completely.
MI2C_CLK	I/O AGP	**MI2C_CLK:** The specific function of this signal is I2C_CLK for a multiplexed digital display. This signal is tri-stated during a hard reset.
MI2C_DATA	I/O AGP	**MI2C_DATA:** The specific function of this signal is I2C_DATA for a multiplexed digital display. This signal is tri-stated during a hard reset.
MDVI_CLK	I/O AGP	**MDVI_CLK:** The specific function is DVI_CLK (DDC) for a multiplexed digital display connector. This signal is tri-stated during a hard reset.
MDVI_DATA	I/O AGP	**MDVI_DATA:** The specific function of this signal is DVI_DATA (DDC) for a multiplexed digital display connector. This signal is tri-stated during a hard reset.
MDDC_CLK	I/O AGP	**MDDC_CLK:** This signal may be used as the DDC_CLK for a secondary multiplexed digital display connector. This signal is tri-stated during a hard reset.
MDDC_DATA	I/O AGP	**MDDC_DATA:** This signal may be used as the DDC_Data for a secondary multiplexed digital display connector. This signal is tri-stated during a hard reset.
ADDID[7:0]	I/O AGP	**ADD Card ID:** These signals will be strapped on the ADD card for software identification purposes. These signals may need pull-up or pull-down resistors in a DVO device down scenario.

2.5.1 Intel® DVO Signal Name to AGP Signal Name Pin Mapping

The 82845G GMCH multiplexes an ADD_Detect signal with the G_PAR signal on the AGP bus. This signal acts as a strap and indicates whether the interface is in AGP or DVO mode (See ADD_DETECT signal description for further information). GSBA(7:0) act as straps for an ADD_ID. When an ADD card is present, ADD_DETECT=0 (DVO mode).

DVO Signal Name	AGP Signal Name	DVO Signal Name	AGP Signal Name
DVOB_D0	GAD_3	DVOC_D0	GAD_19
DVOB_D1	GAD_2	DVOC_D1	GAD_20
DVOB_D2	GAD_5	DVOC_D2	GAD_21
DVOB_D3	GAD_4	DVOC_D3	GAD_22
DVOB_D4	GAD_7	DVOC_D4	GAD_23
DVOB_D5	GAD_6	DVOC_D5	GC/BE_3#
DVOB_D6	GAD_8	DVOC_D6	GAD_25
DVOB_D7	GC/BE_0#	DVOC_D7	GAD_24
DVOB_D8	GAD_10	DVOC_D8	GAD_27
DVOB_D9	GAD_9	DVOC_D9	GAD_26
DVOB_D10	GAD_12	DVOC_D10	GAD_29
DVOB_D11	GAD_11	DVOC_D11	GAD_28
DVOB_CLK	GADSTB_0	DVOC_CLK	GADSTB_1
DVOB_CLK#	GADSTB_0#	DVOC_CLK#	GADSTB_1#
DVOB_HSYNC	GAD_0	DVOC_HSYNC	GAD_17
DVOB_VSYNC	GAD_1	DVOC_VSYNC	GAD_16
DVOB_BLANK#	GC/BE_1#	DVOC_BLANK#	GAD_18
DVOB_CCLKINT#	GAD_13	DVOBC_INTR#	GAD_30
DVOB_FLDSTL	GAD_14	DVOC_FLDSTL	GAD_31
DVOBC_RCOMP	AGP RCOMP	ADDID[7:0]	GSBA_[7:0]
MI2CCLK	GIRDY#	MDVI DATA	GFRAME#
MI2CDATA	GDEVSEL#	MDDC CLK	GAD_15
MDVI CLK	GTRDY#	MDDC DATA	GSTOP#

2.6 Analog Display

Signal Name	Type	Description
HSYNC	O 3.3 V GPIO	**CRT Horizontal Synchronization:** This signal is used as the horizontal sync (polarity is programmable) or “sync interval”.
VSYNC	O 3.3 V GPIO	**CRT Vertical Synchronization:** This signal is used as the vertical sync (polarity is programmable).
RED	O Analog	**RED Analog Video Output:** This signal is a CRT Analog video output from the internal color palette DAC. The DAC is designed for a 37.5 Ω equivalent load on each signal (e.g., 75 Ω resistor on the board, in parallel with a 75 Ω CRT load).
RED#	O Analog	**RED# Analog Output:** This signal is a truly differential analog video output from the internal color palette DAC. Refer to the *Intel® Pentium® 4 Processor in 478-Pin Package and Intel® 845G/845GL/845GV Chipset Platform Design Guide* for routing recommendations. This signal is used to provide noise immunity.
GREEN	O Analog	**GREEN Analog Video Output:** This signal is a CRT Analog video output from the internal color palette DAC. The DAC is designed for a 37.5 Ω equivalent load on each signal (e.g., 75 Ω resistor on the board, in parallel with a 75 Ω CRT load).
GREEN#	O Analog	**GREEN# Analog Output:** This signal is a truly differential analog video output from the internal color palette DAC. Refer to the *Intel® Pentium® 4 Processor in 478-Pin Package and Intel® 845G/845GL/845GV Chipset Platform Design Guide* for routing recommendations. This signal is used to provide noise immunity.
BLUE	O Analog	**BLUE Analog Video Output:** This signal is a CRT Analog video output from the internal color palette DAC. The DAC is designed for a 37.5 Ω equivalent load on each signal (e.g., 75 Ω resistor on the board, in parallel with a 75 Ω CRT load).
BLUE#	O Analog	**BLUE# Analog Output:** This signal is a truly differential analog video output from the internal color palette DAC. Refer to the *Intel® Pentium® 4 Processor in 478-Pin Package and Intel® 845G/845GL/845GV Chipset Platform Design Guide* for routing recommendations. This signal is used to provide noise immunity.
REFSET	I Analog	**Resistor Set:** Set point resistor for the internal color palette DAC. A 137 Ω, 1% resistor is required between REFSET and GND.
DDCA_CLK	I/O 3.3 V GPIO	**Analog DDC Clock:** Clock signal for the I^2C style interface that connects to Analog CRT Display. **NOTE:** This signal may need to be level shifted to 5 V.
DDCA_DATA	I/O 3.3 V GPIO	**Analog DDC Data:** Data signal for the I^2C style interface that connects to Analog CRT Display. **NOTE:** This signal may need to be level shifted to 5 V.

2.7 Clocks, Reset, and Miscellaneous Signals

Signal Name	Type	Description
HCLKP HCLKN	I CMOS	**Differential Host Clock In:** These pins receive a low voltage differential host clock from the external clock synthesizer.
GCLKIN	I LVTTL	**66 MHz Clock In:** This pin receives a 66 MHz clock from the clock synthesizer. This clock is used by AGP and hub interface clock domains.
DREFCLK	I LVTTL	**Display Clock Input:** This pin provides a 48 MHz input clock to the Display PLL that is used for 2D/Video/Flat Panel and DAC.
RSTIN#	I LVTTL	**Reset In:** When asserted, this signal asynchronously resets the GMCH logic. This signal is connected to the PCIRST# output of the Intel® ICH4. All AGP/PCI output and bi-directional signals will also tri-state compliant to *PCI Local Bus Specification, Revision 2.0* and *PCI Local Bus Specification, Revision 2.1*.
PWROK	I 3.3 V GPIO	**Power OK:** When asserted, PWROK is an indication to the GMCH that the core power and GCLKIN have been stable for at least 10 µs.
TESTIN#	I 1.5 V CMOS	**Test Input:** This pin is used for manufacturing and board lever test purposes.

2.8 RCOMP, VREF, VSWING Signals

Signal Name	Type	Description
HDVREF_[2:0]	I	**Host Data Reference Voltage:** Reference voltage input for the data signals of the Host AGTL+ interface.
HA_VREF	I	**Host Address Reference Voltage:** Reference voltage input for the address signals of the Host AGTL+ interface.
HCC_VREF	I	**Host Common Clock Reference Voltage:** Reference voltage input for the common clock signals of the Host AGTL+ interface.
HX_RCOMP HY_RCOMP	I/O CMOS	**Host RCOMP:** These pins are used to calibrate the Host AGTL+ I/O buffers.
HX_SWING HY_SWING	I	**Host Voltage Swing:** These pins provide a reference voltage used by the PSB RCOMP circuit. HX_SWING is used for the signals handled by HX_RCOMP, and HY_SWING is used for the signals handled by HY_RCOMP.
SM_VREF	I	**Memory Reference Voltage:** Reference voltage input for DQ, DQS & SRCVEN_IN#.
SMXRCOMP SMYRCOMP	I/O CMOS	**Memory RCOMP:** These pins are used to calibrate the memory I/O buffers.
AGP_VREF	I	**AGP Reference:** The reference voltage for the AGP/DVO I/O buffers is 0.75 V.
AGP_RCOMP	I/O CMOS	**Compensation for AGP:** This signal is used to calibrate the AGP/DVO buffers. This signal should be connected to ground through a 40 Ω pull-down resistor.
HI_VREF	I	**HI Reference:** Reference voltage input for the hub interface.
HI_RCOMP	I/O CMOS	**Compensation for HI:** This signal is used to calibrate the hub interface I/O buffers. This signal should be connected to 1.5 V through a 68.1 Ω 1% pull-up resistor
HI_SWING	I	**HI Voltage Swing:** This signal provides a reference voltage used by the HI_RCOMP circuit.

Table 2-2 shows the VTT/VDD, VREF, RCOMP, and VSWING levels for the various interfaces.

Table 2-2. Voltage Levels and RCOMP for Various Interfaces

Interface	VTT/VDD (Volts)	VREF (volts)	RCOMP (Ω)	RCOMP term	Vswing (Volts)
Core	1.5 V	NA	NA	Note 2	NA
AGTL+	1.15 -1.75 V(1)	2/3 * VTT	25		1/3*VTT
AGP/DVO	1.5 V	0.5 * VDD	40		NA
HI1.5	1.5 V	0.35	69		0.7
DDR - SSTL_2	1.25/2.5 V	0.5 * VDD	60		NA
SDR - LVTTL	3.3 V	0.5 * VDD	20		NA

NOTE:
1. For the Pentium 4 processor with 512-KB L2 cache on 0.13 Micron Process, VTT range is 1.29 V–1.525 V. For the Pentium 4 processor with 256-KB L2 cache, VTT range is 1.535 V– 1.75 V
2. Refer to the *Intel® Pentium® 4 Processor in 478-Pin Package and Intel® 845G/845GL/845GV Chipset Platform Design Guide* for details.

2.9 Power and Ground Signals

Signal Name	Description
VCC	VCC for 1.5 V core.
VSS	GND supply.
VCCAGP	VCC for AGP – 1.5 V.
VCCA_FSB	Analog Vcc for the Host PLL – 1.5 V. This supply requires special filtering. Refer to the *Intel® Pentium® 4 Processor in 478-Pin Package and Intel® 845G/845GL/845GV Chipset Platform Design Guide* for details.
VTTFSB	VTT supply for PSB, having a range of 1.15 V–1.75 V.
VTTDECAP	VTT edge cap connection supply. Do not connect to MB VTT supply. Refer to the *Intel® Pentium® 4 Processor in 478-Pin Package and Intel® 845G/845GL/845GV Chipset Platform Design Guide* for implementation.
VCCA_HI	Analog VCC for the HI/AGP PLL – 1.5 V. **Does not** require special filtering.
VCCHL	VCC for Hub Interface – 1.5 V.
VCCA_DPLL	Analog Vcc for the Display PLL – 1.5 V. This supply requires special filtering. Refer to the *Intel® Pentium® 4 Processor in 478-Pin Package and Intel® 845G/845GL/845GV Chipset Platform Design Guide* for details.
VCCA_DAC	Analog Vcc for the DAC – 1.5 V. Refer to the *Intel® Pentium® 4 Processor in 478-Pin Package and Intel® 845G/845GL/845GV Chipset Platform Design Guide* for supply requirements.
VSSA_DAC	Analog Vss for the DAC. This supply should go directly to motherboard ground.
VCCGPIO	Vcc for GPIO – 3.3 V.
VCCSM	Vcc for System Memory – 3.3 V for SDR, 2.5 V for DDR.
VCCA_SM	Analog VCC for System Memory DLL – 1.5 V supply requires special filtering. Refer to the *Intel® Pentium® 4 Processor in 478-Pin Package and Intel® 845G/845GL/845GV Chipset Platform Design Guide* for details.
VCCQSM	Quiet VCC for System Memory – 3.3 V for SDR, 2.5 V for DDR. Supply requires special filtering. Refer to the *Intel® Pentium® 4 Processor in 478-Pin Package and Intel® 845G/845GL/845GV Chipset Platform Design Guide* for details.

2.10 Functional Straps

Signal Name	Type	Description
PSBSEL	I	**PSB Frequency Select:** The PSBSEL is tied to the external BSEL resistor-divider circuitry. The value of the PSBSEL pin reflects the PSB frequency. The PSB runs at 400 MHz when PSBSEL is a 0 and runs at 533 MHz when PSBSEL is a 1.
MEMSEL	I	**Memory Configuration Select:** This pin selects the SDR or DDR board configuration. The pin should be unconnected for DDR configuration. For SDR configuration, a pull-down resistor is required. Refer to the *Intel® Pentium® 4 Processor in 478-Pin Package and Intel® 845G/845GL/845GV Chipset Platform Design Guide* for details.

2.11 GMCH Sequencing Requirements

Power Plane and Sequencing Requirements:

- Clock Valid Timing:
- GCLKIN must be valid at least 10 µs prior to the rising edge of PWROK.
- HCLKN/HCLKP must be valid at least 10 µs prior to the rising edge of RSTIN#.
- There is no DREFCLK timing requirements relative to reset.

Figure 2-2. Intel® GMCH System Clock and Reset Requirements

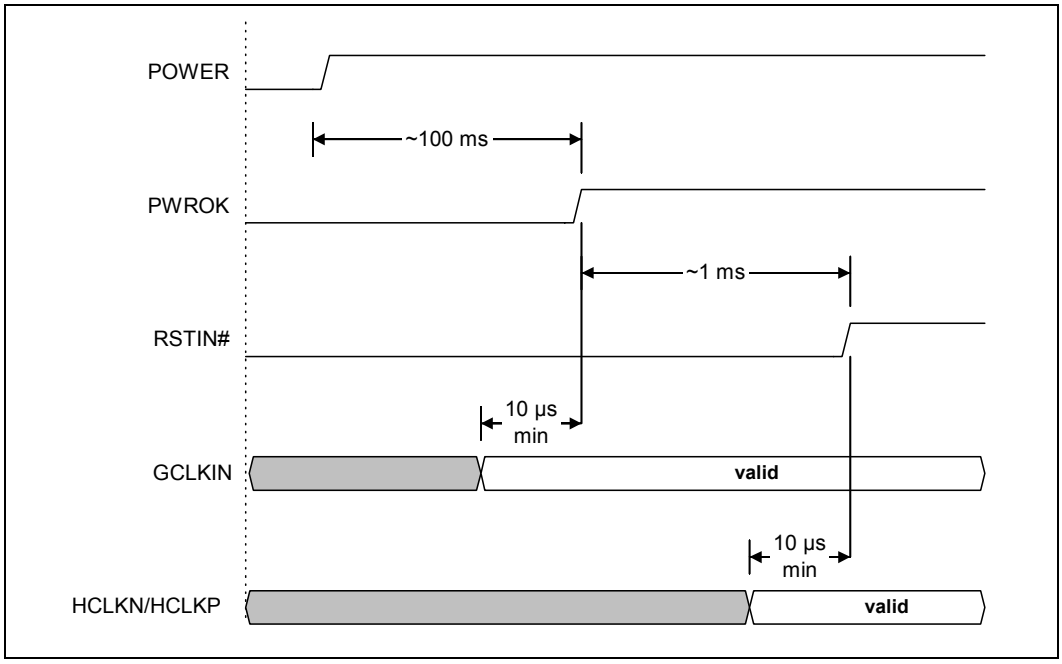

2.12 Reset States

2.12.1 Full and Warm Reset States

Figure 2-3. Full and Warm Reset Waveforms

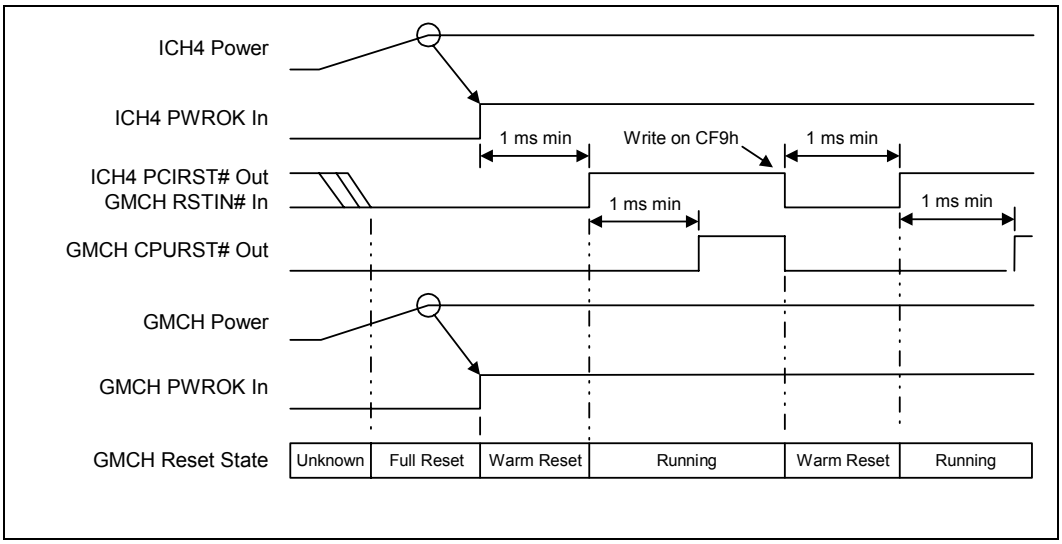

All register bits assume their default values during full reset. A full reset occurs when PCIRST# (GMCH RSTIN#) is asserted and PWROK is deasserted. A warm reset occurs when PCIRST# (GMCH RSTIN#) is asserted and PWROK is also asserted. The following table describes the reset states.

Reset State	RSTIN#	PWROK
Full Reset	L	L
Warm Reset	L	H
Does Not Occur	H	L
Normal Operation	H	H

This page is intentionally left blank.

Register Description 3

This chapter describes the platform device PCI configuration structure and register accesses mechanisms. The chapter also provides a detailed description of the GMCH PCI configuration registers including bit/field descriptions. The GMCH contains two sets of software accessible registers, accessed via the host processor I/O address space:

- Control registers I/O mapped into the processor I/O space, which control access to PCI and AGP configuration space (see section entitled I/O Mapped Registers)
- Internal configuration registers residing within the GMCH are partitioned into three logical device register sets ("logical" since they reside within a single physical device). The first device register set is dedicated to Host-Hub Interface Bridge functionality (controls PCI Bus 0 including DRAM configuration, other chipset operating parameters, and optional features). The second device register set is dedicated to Host-AGP/PCI_B Bridge functions (controls AGP/PCI_B interface configurations and operating parameters). The third device register set is dedicated to the Integrated Graphics Device (IGD).

Note: This configuration scheme is necessary to accommodate the existing and future software configuration model supported by Microsoft where the Host Bridge functionality will be supported and controlled via dedicated and specific driver and "virtual" PCI-to-PCI bridge functionality will be supported via standard PCI bus enumeration configuration software. The term "virtual" is used to designate that no real physical embodiment of the PCI-to-PCI bridge functionality exists within the GMCH, but that GMCH's internal configuration register sets are organized in this particular manner to create that impression to the standard configuration software.

The GMCH supports PCI configuration space accesses using the mechanism denoted as Configuration Mechanism #1 in the *PCI Local Bus Specification, Revision 2.1*. The GMCH internal registers (both I/O Mapped and Configuration registers) are accessible by the Host processor. The registers can be accessed as Byte, Word (16-bit), or DWord (32-bit) quantities, with the exception of CONFIG_ADDRESS which can only be accessed as a DWord. All multi-byte numeric fields use "little-endian" ordering (i.e., lower addresses contain the least significant parts of the field).

3.1 Register Terminology

Term	Description
RO	**Read Only.** In some cases, If a register is read only, writes to this register location have no effect.
WO	**Write Only.** In some cases, If a register is write only, reads to this register location have no effect.
R/W	**Read/Write.** A register with this attribute can be read and written.
R/WC	**Read/Write Clear.** A register bit with this attribute can be read and written. However, a write of 1 clears (sets to 0) the corresponding bit and a write of 0 has no effect.
R/W/L	**Read/Write/Lock.** A register with this attribute can be read, written and locked.
R/WO	**Read/Write Once.** A register (bit) with this attribute can be written only once after power up. After the first write, the register (bit) becomes read only.
L	**Lock.** A register bit with this attribute becomes read only after a lock bit is set.

Term	Description
Reserved Bits	Some of the GMCH registers described in this chapter contain reserved bits. These bits are labeled Reserved (Rsvd). Software must deal correctly with fields that are reserved. On reads, software must use appropriate masks to extract the defined bits and not rely on reserved bits being any particular value. On writes, software must ensure that the values of reserved bit positions are preserved. That is, the values of reserved bit positions must first be read, merged with the new values for other bit positions, and then written back. Note the software does not need to perform read, merge, and write operations for the configuration address register.
Reserved Registers	In addition to reserved bits within a register, the GMCH contains address locations in the configuration space of the Host-Hub Interface Bridge entity that are marked either "Reserved" or "Intel Reserved." The GMCH responds to accesses to "Reserved" address locations by completing the host cycle. When a "**Reserved**" register location is read, a zero value is returned. ("Reserved" registers can be 8-, 16-, or 32-bits in size). Writes to "Reserved" registers have no effect on the GMCH. Registers that are marked as "Intel Reserved" must not be modified by system software. Writes to "**Intel Reserved**" registers may cause system failure. Reads to "Intel Reserved" registers may return a non-zero value.
Default Value upon Reset	Upon Reset, the GMCH sets all of its internal configuration registers to predetermined default states. Some register values at reset are determined by external strapping options. The default state represents the minimum functionality feature set required to successfully bring up the system. Hence, it does not represent the optimal system configuration. It is the responsibility of the system initialization software (usually BIOS) to properly determine the DRAM configurations, operating parameters and optional system features that are applicable, and to program the GMCH registers accordingly.

3.2 Platform Configuration

In some previous chipsets the MCH (or GMCH) component and the I/O Controller Hub component were physically connected by PCI bus #0. From a configuration standpoint, both components appeared to be on PCI bus #0 which was also the system's primary PCI expansion bus. The north bridge contained two PCI devices while the south bridge was considered one PCI device with multiple functions.

In the 845G chipset the configuration structure is significantly different. The GMCH and the ICH4 are physically connected by the hub interface; thus, from a configuration standpoint, the hub interface is logically PCI bus #0. As a result, all devices internal to the GMCH and ICH4 appear to be on PCI bus #0. The system's primary PCI expansion bus is physically attached to the ICH4 and, from a configuration perspective, appears to be a hierarchical PCI bus behind a PCI-to-PCI bridge and therefore has a programmable PCI Bus number. The AGP appears to system software to be a real PCI bus behind PCI-to-PCI bridges resident as devices on PCI bus #0.

Note: The primary PCI bus is referred to as PCI_A in this document and is not PCI bus #0 from a configuration standpoint.

The GMCH contains the following PCI devices within a single physical component. The configuration registers for the devices are mapped as devices residing on PCI bus #0.

- **Device 0:** Host-HI Bridge/DRAM controller. Logically this appears as a PCI device residing on PCI bus #0. Physically Device 0 contains the standard PCI registers, DRAM registers, AGP capabilities registers, the Graphics Aperture controller, and other GMCH specific registers.
- **Device 1:** Host-AGP Bridge. Logically this appears as a "virtual" PCI-to-PCI bridge residing on PCI bus #0. Physically Device 1 contains the standard PCI-to-PCI bridge registers and the standard AGP/PCI configuration registers (including the AGP I/O and memory address mapping).
- **Device 2:** Integrated Graphics controller. Logically this appears as a PCI device residing on PCI bus #0. Physically Device 2 contains the configuration registers for 3D, 2D and display functions.
- **Device 6:** Intel Reserved.

Logically, the ICH4 appears as multiple PCI devices within a single physical component also residing on PCI bus #0. One of the ICH4 devices is a PCI-to-PCI bridge. Logically, the primary side of the bridge resides on PCI #0 while the secondary side is the standard PCI expansion bus.

Note: A physical PCI bus #0 does not exist and that the hub interface and the internal devices in the GMCH and ICH4 logically constitute PCI Bus #0 to configuration software.

Figure 3-1. Conceptual Intel® 845G Chipset Platform PCI Configuration Diagram

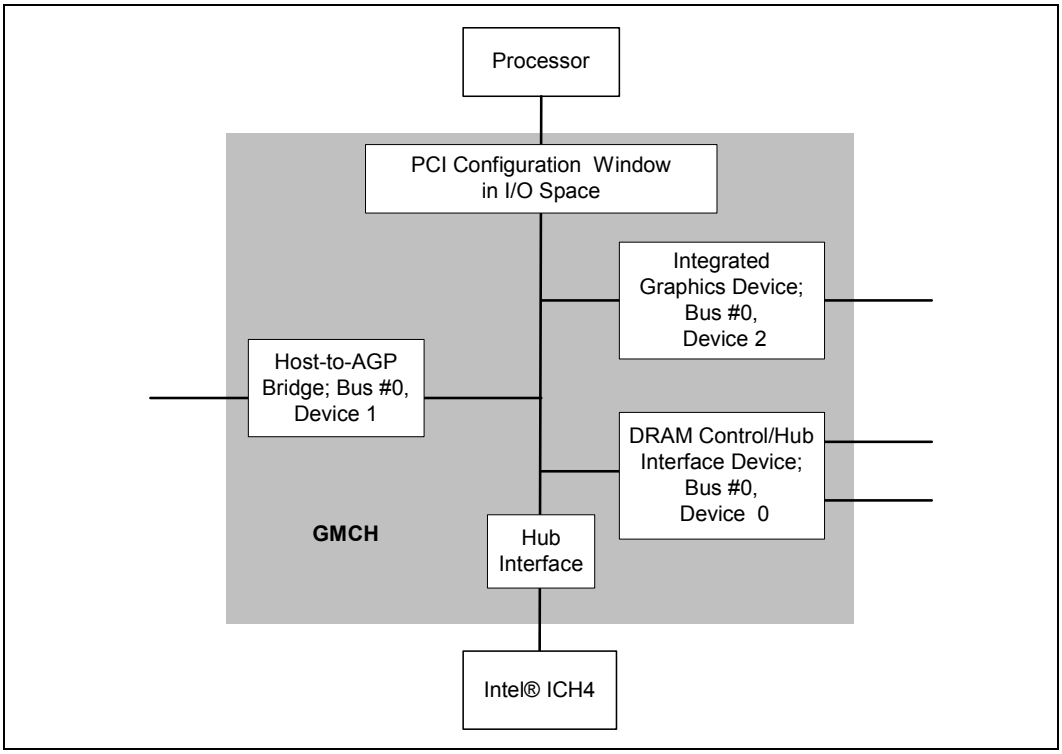

3.3 Routing Configuration Accesses

The GMCH supports two bus interfaces: Hub interface and AGP/PCI. PCI configuration cycles are selectively routed to one of these interfaces. The GMCH is responsible for routing PCI configuration cycles to the proper interface. PCI configuration cycles to ICH4 internal devices and Primary PCI (including downstream devices) are routed to the ICH4 via the hub interface. AGP/PCI_B configuration cycles are routed to AGP. The AGP/PCI_B interface is treated as a separate PCI bus from the configuration point of view. Routing of configuration accesses to AGP/PCI_B is controlled via the standard PCI-to-PCI bridge mechanism using information contained within the Primary Bus Number, the Secondary Bus Number, and the Subordinate Bus Number registers of the corresponding PCI-to-PCI bridge device.

A detailed description of the mechanism for translating processor I/O bus cycles to configuration cycles on one of the two buses is described in the following sections.

3.3.1 Standard PCI Bus Configuration Mechanism

The *PCI Local Bus Specification, Revision 2.1* defines a slot based "configuration space" that allows each device to contain up to eight functions with each function containing up to 256, 8-bit configuration registers. The *PCI Local Bus Specification, Revision 2.1* defines two bus cycles to access the PCI configuration space: Configuration Read and Configuration Write. Memory and I/O spaces are supported directly by the processor. Configuration space is supported by a mapping mechanism implemented within the GMCH. The *PCI Local Bus Specification, Revision 2.2* defines the Configuration Mechanism to access configuration space.

The configuration access mechanism makes use of the CONFIG_ADDRESS Register (at I/O address 0CF8h though 0CFBh) and CONFIG_DATA Register (at I/O address 0CFCh though 0CFFh). To reference a configuration register a DWord I/O write cycle is used to place a value into CONFIG_ADDRESS that specifies the PCI bus, the device on that bus, the function within the device, and a specific configuration register of the device function being accessed. CONFIG_ADDRESS[31] must be 1 to enable a configuration cycle. CONFIG_DATA then becomes a window into the four bytes of configuration space specified by the contents of CONFIG_ADDRESS. Any read or write to CONFIG_DATA will result in the GMCH translating the CONFIG_ADDRESS into the appropriate configuration cycle.

The GMCH is responsible for translating and routing the processor's I/O accesses to the CONFIG_ADDRESS and CONFIG_DATA registers to internal GMCH configuration registers, Hub Interface or AGP/PCI_B.

3.3.2 PCI Bus #0 Configuration Mechanism

The GMCH decodes the Bus Number (bits 23:16) and the Device Number fields of the CONFIG_ADDRESS register. If the Bus Number field of CONFIG_ADDRESS is 0 the configuration cycle is targeting a PCI Bus #0 device. The Host-HI Bridge entity within the GMCH is hardwired as Device 0 on PCI Bus #0. The Host-AGP/PCI_B Bridge entity within the GMCH is hardwired as Device 1 on PCI Bus #0. The integrated Graphics entity within the GMCH is hardwired as Device 2 on PCI Bus #0. Configuration cycles to any of the GMCH's internal devices are confined to the GMCH and not sent over the hub interface.

3.3.3 Primary PCI and Downstream Configuration Mechanism

If the Bus Number in the CONFIG_ADDRESS is non-zero, and is less than the value in the Host-AGP/PCI_B device's Secondary Bus Number register or greater than the value in the Host-AGP/PCI_B device's Subordinate Bus Number register, the GMCH will generate a Type 1 Hub Interface Configuration Cycle.

If the cycle is forwarded to the ICH4 via the hub interface, the ICH4 compares the non-zero Bus Number with the Secondary Bus Number and Subordinate Bus Number registers of its PCI-to-PCI bridges to determine if the configuration cycle is meant for Primary PCI, or a downstream PCI bus.

3.3.4 AGP/PCI_B Bus Configuration Mechanism

From the chipset configuration perspective, AGP/PCI_B is seen as PCI bus interfaces residing on a Secondary Bus side of the "virtual" PCI-to-PCI bridges referred to as the GMCH Host-PCI_B/AGP bridge. On the Primary bus side, the "virtual" PCI-to-PCI bridge is attached to PCI Bus #0. Therefore, the Primary Bus Number register is hardwired to 0. The "virtual" PCI-to-PCI bridge entity converts Type #1 PCI Bus Configuration cycles on PCI Bus #0 into Type 0 or Type 1 configuration cycles on the AGP/PCI_B interface. Type 1 configuration cycles on PCI Bus #0 that

have a Bus Number that matches the Secondary Bus Number of the GMCH's "virtual" Host-to-PCI_B/AGP bridge will be translated into Type 0 configuration cycles on the PCI_B/AGP interface. The GMCH will decode the Device Number field [15:11] and assert the appropriate GAD signal as an IDSEL in accordance with the PCI-to-PCI Bridge Type 0 configuration mechanism. The remaining address bits will be mapped as described in Figure 3-2.

Figure 3-2. Configuration Mechanism Type 0 Configuration Address to PCI Address Mapping

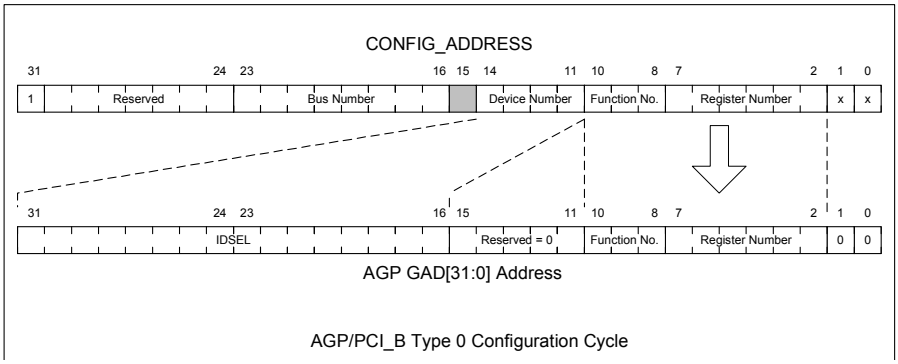

Config Address AD[15:11]	AGP GAD[31:16] IDSEL	Config Address AD[15:11]	AGP GAD[31:16] IDSEL
00000	0000 0000 0000 0001	01000	0000 0001 0000 0000
00001	0000 0000 0000 0010	01001	0000 0010 0000 0000
00010	0000 0000 0000 0100	01010	0000 0100 0000 0000
00011	0000 0000 0000 1000	01011	0000 1000 0000 0000
00100	0000 0000 0001 0000	01100	0001 0000 0000 0000
00101	0000 0000 0010 0000	01101	0010 0000 0000 0000
00110	0000 0000 0100 0000	01110	0100 0000 0000 0000
00111	0000 0000 1000 0000	01111	1000 0000 0000 0000
		1xxxx	0000 0000 0000 0000

NOTE: If the Bus Number is non-zero, greater than the value programmed into the Secondary Bus Number register, and less than or equal to the value programmed into the Subordinate Bus Number register the configuration cycle is targeting a PCI bus downstream of the targeted interface. The GMCH will generate a Type 1 PCI configuration cycle on PCI_B/AGP. The address bits will be mapped as described in Figure 3-3.

Figure 3-3. Configuration Mechanism Type 1 Configuration Address to PCI Address Mapping

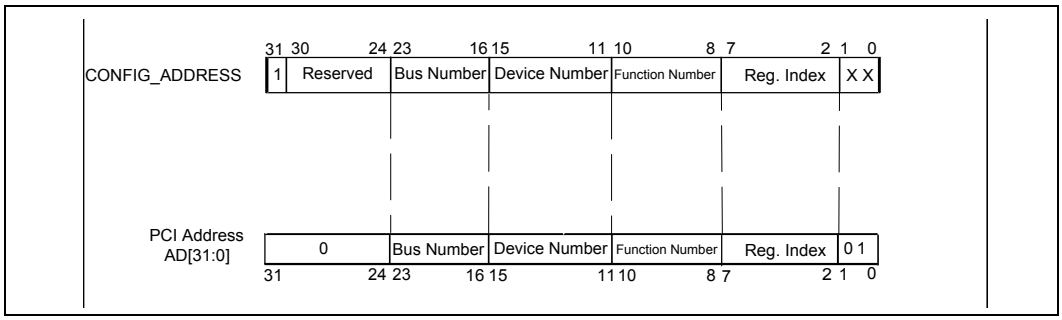

To prepare for mapping of the configuration cycles on AGP/PCI_B, the initialization software will go through the following sequence:

1. Scan all devices residing on the PCI Bus #0 using Type 0 configuration accesses.
2. For every device residing at bus #0 which implements PCI-to-PCI bridge functionality, it will configure the secondary bus of the bridge with the appropriate number and scan further down the hierarchy. This process includes the configuration of the "virtual" PCI-to-PCI bridges within the GMCH used to map the AGP device's address spaces in a software specific manner.

Note: Although initial AGP platform implementations will not support hierarchical buses residing below AGP, this specification still must define this capability to support PCI-66 compatibility. Note also that future implementations of the AGP devices may support hierarchical PCI or AGP-like buses coming out of the root AGP device.

3.4 I/O Mapped Registers

The GMCH contains two registers that reside in the processor I/O address space – the Configuration Address (CONFIG_ADDRESS) Register and the Configuration Data (CONFIG_DATA) Register. The Configuration Address Register enables/disables the configuration space and determines what portion of configuration space is visible through the Configuration Data window.

3.4.1 CONFIG_ADDRESS—Configuration Address Register

I/O Address:	0CF8h Accessed as a DWord
Default Value:	00000000h
Access:	R/W
Size:	32 bits

CONFIG_ADDRESS is a 32-bit register that can be accessed only as a DWord. A Byte or Word reference will "pass through" the Configuration Address Register and hub interface onto the PCI_A bus as an I/O cycle. The CONFIG_ADDRESS register contains the Bus Number, Device Number, Function Number, and Register Number for which a subsequent configuration access is intended.

Bit	Description
31	**Configuration Enable (CFGE).** 1 = Enable. 0 = Disable.
30:24	**Reserved.** These bits are read only and have a value of 0.
23:16	**Bus Number.** When the Bus Number is programmed to 00h the target of the Configuration Cycle is a hub interface agent (GMCH, Intel® ICH4, etc.). The Configuration Cycle is forwarded to the hub interface if the Bus Number is programmed to 00h and the GMCH is not the target. If the Bus Number is non-zero and matches the value programmed into the Secondary Bus Number Register of Device 1, a Type 0 PCI configuration cycle will be generated on AGP/PCI_B. If the Bus Number is non-zero, greater than the value in the Secondary Bus Number register of Device 1 and less than or equal to the value programmed into the Subordinate Bus Number Register of Device 1, a Type 1 PCI configuration cycle is generated on AGP/PCI_B. If the Bus Number is non-zero, and does not fall within the ranges enumerated by Device 1's Secondary Bus Number or Subordinate Bus Number Register, then a HI Type 1 configuration Cycle is generated.
15:11	**Device Number.** This field selects one agent on the PCI bus selected by the Bus Number. When the Bus Number field is "00" the GMCH decodes the Device Number field. The GMCH is always Device Number 0 for the Host-HI bridge entity, Device Number 1 for the Host-PCI_B/AGP entity, and device 2 for the integrated graphics device. Therefore, when the Bus Number =0 and the Device Number equals 0,1 or 2, the internal GMCH devices are selected. If the Bus Number is non-zero and matches the value programmed into the Device#1 Secondary Bus Number Register, a Type 0 PCI configuration cycle will be generated on AGP/PCI_B. The Device Number field is decoded and the GMCH asserts one and only one GADxx signal as an IDSEL. GAD16 is asserted to access Device 0, GAD17 for Device 1 and so forth up to Device 15 for which will assert AD31. All device numbers higher than #15 cause a type 0 configuration access with no IDSEL asserted, which will result in a Master Abort reported in the GMCH's "virtual" PCI-to-PCI bridge registers. For Bus Numbers resulting in AGP/PCI_B Type 1 Configuration cycles the Device Number is propagated as GAD[15:11].
10:8	**Function Number.** This field is mapped to GAD[10:8] during AGP/PCI_B Configuration cycles and A[10:8] during HI configuration cycles. This allows the configuration registers of a particular function in a multi-function device to be accessed. The GMCH ignores configuration cycles to its internal Devices if the function number is not equal to 0.
7:2	**Register Number.** This field selects one register within a particular Bus, Device, and Function as specified by the other fields in the Configuration Address Register. This field is mapped to GAD[7:2] during AGP/PCI_B Configuration cycles and A[7:2] during HI Configuration cycles.
1:0	**Reserved.**

3.4.2 CONFIG_DATA—Configuration Data Register

I/O Address:	0CFCh
Default Value:	00000000h
Access:	Read/Write
Size:	32 bits

CONFIG_DATA is a 32-bit read/write window into configuration space. The portion of configuration space that is referenced by CONFIG_DATA is determined by the contents of CONFIG_ADDRESS.

Bit	Description
31:0	**Configuration Data Window (CDW).** If bit 31 of CONFIG_ADDRESS is 1 any I/O access that to the CONFIG_DATA register will be mapped to configuration space using the contents of CONFIG_ADDRESS.

3.5 Intel® GMCH Internal Device Registers

3.5.1 DRAM Controller/Host-Hub Interface Device Registers (Device 0)

The DRAM controller and host-hub interface registers are in Device 0. This section contains the PCI configuration registers listed in order of ascending offset address. Table 3-1 provides the register address map for this device.

Table 3-1. DRAM Controller/Host-Hub Register Address Map (Device 0) (Sheet 1 of 2)

Address Offset	Symbol	Register Name	Default Value	Access
00–01h	VID	Vendor Identification	8086h	RO
02–03h	DID	Device Identification	2560h	RO
04–05h	PCICMD	PCI Command Register	0006h	RO, R/W
06–07h	PCISTS	PCI Status Register	0090h	RO, R/WC
08h	RID	Revision Identification	see register description	RO
09	—	Intel Reserved	—	—
0Ah	SUBC	Sub-Class Code	00h	RO
0Bh	BCC	Base Class Code	06h	RO
0Ch	—	Intel Reserved	—	—
0Dh	MLT	Master Latency Timer	00h	RO
0Eh	HDR	Header Type	00h	RO
0Fh	—	Intel Reserved	—	—
10–13h	APBASE	Aperture Base Configuration	00000008h	RO, R/W
14–2Bh	—	Intel Reserved	—	—
2C–2Dh	SVID	Subsystem Vendor Identification	0000h	R/WO
2E–2Fh	SID	Subsystem Identification	0000h	R/WO
30–33h	—	Intel Reserved	—	—
34h	CAPPTR	Capabilities Pointer	E4h	RO
35–50h	—	Intel Reserved	—	—
51h	AGPM	AGP Miscellaneous Configuration	00h	R/W
52h	GC	Graphics Control	0000_1000b	R/W
53–5Fh	—	Intel Reserved	—	—
60–63h	DRB[0:3]	DRAM Row Boundary (4 registers)	01h	RW
64–6Fh	—	Intel Reserved	—	—
70–71h	DRA[0:3]	DRAM Row Attribute (4 registers)	00h	RW
72–77h	—	Intel Reserved	—	—
78–7Bh	DRT	DRAM Timing Register	00000000h	RW
7C–7Fh	DRC	DRAM Controller Mode	00000000h	RW, RO
80–8Fh	—	Intel Reserved	—	—

Table 3-1. DRAM Controller/Host-Hub Register Address Map (Device 0) (Sheet 2 of 2)

Address Offset	Symbol	Register Name	Default Value	Access
90–96h	PAM[0:6]	Programmable Attribute Map	00h	RO, R/W
97h	FDHC	Fixed SDRAM Hole Control	00h	RO, R/W
98–9Ch	—	Intel Reserved	—	—
9D	SMRAM	System Management RAM Control	02h	RO, R/W, L
9E	ESMRAMC	Extended System Management RAM Control	38h	RO, R/W, RWC, L
9Fh	—	Intel Reserved	—	—
A0–A3h	ACAPID	AGP Capability Identifier	0020 0002h	RO
A4–A7h	AGPSTAT	AGP Status	1F00 0217h	RO
A8–ABh	AGPCMD	AGP Command	0000 0000h	RO, R/W
AC–AFh	—	Intel Reserved	—	—
B0–B3h	AGPCTRL	AGP Control	0000 0000h	RO, R/W
B4h	APSIZE	Aperture Size	00h	RO, R/W
B5–B7h	—	Intel Reserved	—	—
B8–BBh	ATTBASE	Aperture Translation Table	00000000h	RO, R/W
BCh	AMTT	AGP MTT Control R	10h	RO, R/W
BDh	LPTT	AGP Low Priority Transaction Timer	10h	RO, R/W
BE–C5h	—	Intel Reserved	—	—
C6–C7h	GMCHCFG	GMCH Configuration	0C01h	RWO, RO, R/W
C8–C9h	ERRSTS	Error Status	0000h	R/WC
CA–CBh	ERRCMD	Error Command	0000h	RO, R/W
CC–CDh	SMICMD	SMI Command	0000h	RO, R/W
CE–CFh	SCICMD	SCI Command	0000h	RO, R/W
D0–DDh	—	Intel Reserved	—	—
DE–DFh	SKPD	Scratchpad Data	0000h	R/W
E0–E3h	—	Intel Reserved	—	—
E4–E8h	CAPREG	Capability Identification	0x_x105_A009h	RO
E9–FFh	—	Intel Reserved	—	—

3.5.1.1 VID—Vendor Identification Register (Device 0)

Address Offset: 00–01h
Default Value: 8086h
Access: RO
Size: 16 bits

The VID Register contains the vendor identification number. This 16-bit register combined with the Device Identification Register uniquely identify any PCI device. Writes to this register have no effect.

Bit	Description
15:0	**Vendor Identification (VID).** This register field contains the PCI standard identification for Intel, 8086h.

3.5.1.2 DID—Device Identification Register (Device 0)

Address Offset: 02–03h
Default Value: 2560h
Access: RO
Size: 16 bits

This 16-bit register combined with the Vendor Identification register uniquely identifies any PCI device. Writes to this register have no effect.

Bit	Description
15:0	**Device Identification Number (DID).** This is a 16-bit value assigned to the GMCH Host-HI Bridge Function #0.

3.5.1.3 PCICMD—PCI Command Register (Device 0)

Address Offset: 04–05h
Default Value: 0006h
Access: RO, R/W
Size: 16 bits

Since GMCH Device 0 does not physically reside on PCI_A, many of the bits are not implemented.

Bit	Description
15:10	Reserved.
9	**Fast Back-to-Back Enable (FB2B)—RO.** Hardwired to 0. This bit controls whether or not the master can do fast back-to-back write. Since Device 0 is strictly a target, this bit is not implemented.
8	**SERR Enable (SERRE)—R/W.** This bit is a global enable bit for Device 0 SERR messaging. The GMCH does not have an SERR signal. The GMCH communicates the SERR condition by sending an SERR message over HI to the ICH4. 0 = Disable. The GMCH does not generate the SERR message for Device 0. 1 = Enable. GMCH is enabled to generate SERR messages over the hub interface for specific Device 0 error conditions that are individually enabled in the ERRCMD register. The error status is reported in the ERRSTS and PCISTS registers. **NOTE:** This bit only controls SERR messaging for the Device 0. Devices 1has its own SERRE bits to control error reporting for error conditions occurring on their respective devices. The control bits are used in a logical OR manner to enable the SERR HI message mechanism.
7	**Address/Data Stepping Enable (ADSTEP)—RO.** Hardwired to 0. Not implemented.
6	**Parity Error Enable (PERRE)—RO.** Hardwired to 0. PERR# is not implemented by the GMCH.
5	**VGA Palette Snoop Enable (VGASNOOP)—RO.** Hardwired to 0. Not implemented.
4	**Memory Write and Invalidate Enable (MWIE)—RO.** Hardwired to 0. The GMCH will never issue memory write and invalidate commands.
3	**Special Cycle Enable (SCE)—RO.** Hardwired to 0. The GMCH does not implement this bit.
2	**Bus Master Enable (BME)—RO.** Hardwired to 1. The GMCH is always enabled as a master on the hub interface.
1	**Memory Access Enable (MAE)—RO.** Hardwired to 1. Not implemented. The GMCH always allows access to main memory.
0	**I/O Access Enable (IOAE)—RO.** Hardwired to 0. Not implemented.

3.5.1.4 PCISTS—PCI Status Register (Device 0)

Address Offset: 06–07h
Default Value: 0090h
Access: RO, R/WC
Size: 16 bits

PCISTS is a 16-bit status register that reports the occurrence of error events on Device 0's PCI interface. Bit 14 is read/write clear. All other bits are Read Only. Since GMCH Device 0 does not physically reside on PCI_A, many of the bits are not implemented.

Bit	Description
15	**Detected Parity Error (DPE)—RO.** Hardwired to 0. Not implemented.
14	**Signaled System Error (SSE)—R/WC.** 0 = SERR message not generated for Device 0 SERR condition. 1 = GMCH Device 0 generated an SERR message over the hub interface for any enabled Device 0 error condition. Device 0 error conditions are enabled in the PCICMD and ERRCMD registers. Device 0 error flags are read/reset from the PCISTS or ERRSTS registers. Software sets SSE to 0 by writing a 1 to this bit. **NOTE:** Software clears this bit by writing a 1 to it.
13	**Received Master Abort Status (RMAS)—RO.** This bit is set when the GMCH generates a hub interface request that receives a Master Abort completion packet or Master Abort Special Cycle.
12	**Received Target Abort Status (RTAS)—RO.** This bit is set when the GMCH generates a hub interface request that receives a Target Abort completion packet or Target Abort Special Cycle.
11	**Signaled Target Abort Status (STAS)—RO.** Hardwired to 0. Not implemented. The GMCH will not generate a Target Abort HI completion packet or Special Cycle.
10:9	**DEVSEL Timing (DEVT)—RO.** Hardwired to 00. Device 0 does not physically connect to PCI_A. These bits are set to "00" (fast decode) so that optimum DEVSEL timing for PCI_A is not limited by the GMCH.
8	**Master Data Parity Error Detected (DPD)—RO.** Hardwired to 0. PERR signaling and messaging are not implemented by the GMCH.
7	**Fast Back-to-Back (FB2B)—RO.** Hardwired to 1. Device 0 does not physically connect to PCI_A. This bit is set to 1 (indicating fast back-to-back capability) so that the optimum setting for PCI_A is not limited by the GMCH.
6:5	Reserved.
4	**Capability List (CLIST)—RO.** Hardwired to 1. This indicates to the configuration software that this device/function implements a list of new capabilities. A list of new capabilities is accessed via CAPPTR register (offset 34h). The CAPPTR register contains an offset pointing to the start address within configuration space of this device where the AGP Capability standard register resides.
3:0	Reserved.

3.5.1.5 RID—Revision Identification Register (Device 0)

Address Offset: 08h
Default Value: See table below
Access: RO
Size: 8 bits

This register contains the revision number of the GMCH Device 0.

Bit	Description
7:0	**Revision Identification Number (RID).** This is an 8-bit value that indicates the revision identification number for the GMCH Device 0. **82845G and 82845GL GMCH** 01h = A1 Stepping 03h = B1 Stepping **82845GV GMCH** 01h = A1 Stepping

3.5.1.6 SUBC—Sub-Class Code Register (Device 0)

Address Offset: 0Ah
Default Value: 00h
Access: RO
Size: 8 bits

This register contains the Sub-Class Code for the GMCH Device 0.

Bit	Description
7:0	**Sub-Class Code (SUBC).** This is an 8-bit value that indicates the category of Bridge into which the GMCH falls. 00h = Host Bridge.

3.5.1.7 BCC—Base Class Code Register (Device 0)

Address Offset: 0Bh
Default Value: 06h
Access: RO
Size: 8 bits

This register contains the Base Class Code of the GMCH Device 0.

Bit	Description
7:0	**Base Class Code (BASEC).** This is an 8-bit value that indicates the Base Class Code for the GMCH. 06h = Bridge device.

3.5.1.8 MLT—Master Latency Timer Register (Device 0)

Address Offset: 0Dh
Default Value: 00h
Access: RO
Size: 8 bits

Device 0 in the GMCH is not a PCI master. Therefore this register is not implemented.

Bit	Description
7:0	Reserved.

3.5.1.9 HDR—Header Type Register (Device 0)

Address Offset: 0Eh
Default Value: 00h
Access: RO
Size: 8 bits

This register identifies the header layout of the configuration space. No physical register exists at this location.

Bit	Description
7:0	**PCI Header (HDR).** This field always returns 0 to indicate that the GMCH is a single function device with standard header layout.

3.5.1.10 APBASE—Aperture Base Configuration Register (Device 0)

Address Offset: 10–13h
Default Value: 00000008h
Access: RO, R/W
Size: 32 bits

The APBASE is a standard PCI Base Address register that is used to set the base of the Graphics Aperture. The standard PCI Configuration mechanism defines the base address configuration register such that only a fixed amount of space can be requested (dependent on which bits are hardwired to 0 or behave as hardwired to 0). To allow for flexibility (of the aperture) an additional register called APSIZE is used as a "back-end" register to control which bits of the APBASE will behave as hardwired to 0. This register will be programmed by the GMCH specific BIOS code that will run before any of the generic configuration software is run.

Note: Bit 1 of the AGPM register is used to prevent accesses to the aperture range before this register is initialized by the configuration software and the appropriate translation table structure has been established in the main memory.

Bit	Description
31:28	**Upper Programmable Base Address (UPBITS)—R/W.** These bits are part of the aperture base set by configuration software to locate the base address of the graphics aperture. They correspond to bits [31:28] of the base address in the processor's address space that will cause a graphics aperture translation to be inserted into the path of any memory read or write.
27:22	**Middle Hardwired/Programmable Base Address (MIDBITS)—R/W.** These bits are part of the aperture base set by configuration software to locate the base address of the graphics aperture. They correspond to bits [27:4] of the base address in the processor's address space that will cause a graphics aperture translation to be inserted into the path of any memory read or write. These bits can behave as though they were hardwired to 0 if programmed to do so by the APSIZE bits of the APSIZE register. This will cause configuration software to understand that the granularity of the graphics aperture base address is either finer or more coarse, depending upon the bits set by GMCH-specific configuration software in APSIZE.
21:4	**Lower Bits (LOWBITS)—RO.** Hardwired to zeros. This forces the minimum aperture size selectable by this register to be 4 MB, without regard to the aperture size definition enforced by the APSIZE register.
3	**Prefetchable (PF)—RO.** Hardwired to 1. This identifies the Graphics Aperture range as prefetchable (per the *PCI Local Bus Specification, Revision 2.1* for base address registers). This implies that there are no side effects on reads, the device returns all bytes on reads (regardless of the byte enables) and the GMCH may merge processor writes into this range without causing errors.
2:1	**Addressing Type (TYPE)—RO.** Hardwired to 00. This indicates that the address range defined by the upper bits of this register can be located anywhere in the 32-bit address space as per the *PCI Local Bus Specification, Revision 2.1* for base address registers.
0	**Memory Space Indicator (MSPACE)—RO.** Hardwired to 0. This identifies the aperture range as a memory range as per the *PCI Local Bus Specification, Revision 2.1* for base address registers.

3.5.1.11 SVID—Subsystem Vendor Identification Register (Device 0)

Address Offset: 2C–2Dh
Default Value: 0000h
Access: R/W-Once
Size: 16 bits

This value is used to identify the vendor of the subsystem.

Bit	Description
15:0	**Subsystem Vendor ID (SUBVID)—R/WO.** This field should be programmed during boot-up to indicate the vendor of the system board. After it has been written once, it becomes read only.

3.5.1.12 SID—Subsystem Identification Register (Device 0)

Address Offset: 2E–2Fh
Default Value: 0000h
Access: R/W-Once
Size: 16 bits

This value is used to identify a particular subsystem.

Bit	Description
15:0	**Subsystem ID (SUBID)—R/WO.** This field should be programmed during BIOS initialization. After it has been written once, it becomes read only.

3.5.1.13 CAPPTR—Capabilities Pointer Register (Device 0)

Address Offset: 34h
Default Value: E4h
Access: RO
Size: 8 bits

The CAPPTR provides the offset that is the pointer to the location of the first device capability in the capability list.

Bit	Description
7:0	**Pointer Address.** This field provides an address that is the offset of the first capability ID register block. For the GMCH, the first capability is the Product-Specific Capability that is located at offset E4h.

3.5.1.14 AGPM—AGP Miscellaneous Configuration Register (Device 0)

Address Offset: 51h
Default Value: 00h
Access: R/W
Size: 8 bits

Bit	Description
7:2	Reserved.
1	**Aperture Access Global Enable (APEN).** This bit is used to prevent access to the graphics aperture from any port (CPU, HI, or AGP/PCI_B) before the aperture range is established by the configuration software and the appropriate translation table in the main SDRAM has been initialized. 0 = Disable. (Default). This field must be set after the system is fully configured in order to enable aperture accesses. 1 = Enable.
0	Reserved.

3.5.1.15 GC—Graphics Control Register (Device 0)

Address Offset: 52h
Default Value: 0000_1000b
Access: R/W
Size: 8 bits

Bit	Description
7	Reserved. Default = 0
6:4	**Graphics Mode Select (GMS)—R/W.** This field is used to select the amount of Main Memory that is pre-allocated to support the Internal Graphics device in VGA (non-linear) and Native (linear) modes. These 3 bits are valid only when Internal graphics is enabled. 000 = No memory pre-allocated. Default 001 = Reserved. 010 = DVMT (UMA) mode, 512 KB of memory pre-allocated for frame buffer. 011 = DVMT (UMA) mode, 1 MB of memory pre-allocated for frame buffer. 100 = DVMT (UMA) mode, 8 MB of memory pre-allocated for frame buffer. All other combinations reserved. **NOTE:** These register bits are locked and become read only when the D_LCK bit in the SMRAM register is set.
3	**Integrated Graphics Disable (IGDIS)—R/W[1].** 0 = Enable (Internal Graphics is enabled). The GMCH's Device 1 is disabled such that all configuration cycles to Device 1 flow through to the hub interface. Also, the Next_Pointer field in the CAPREG register (Dev 0, Offset E4h) will be RO at 00h. 1 = Disable (Internal Graphics is disabled and AGP Graphics is enabled). (default). The GMCH's Device 2 is disabled such that all configuration cycles to Device 2 flow through to the hub interface. **NOTE:** 1. When writing a new value to this bit, a warm reset through the ICH4 must be executed before the bit becomes effective. This must be enforced by BIOS. However, changing this bit in software requires a "warm reset".
2	**Internal Graphics IO Aliasing Enable (IGIOALIASEN)—R/W.** 0 = Disable (Default). the IGD observes address bits 15:10 (must be all zeros) while decoding VGA I/O transactions. No VGA IO alias addresses are claimed by the IGD. I/O addresses not claimed by the IGD (excluding CONFIG_ADDRESS and CONFIG_DATA) subtractively decode to the hub interface. 1 = Enable. The IGD ignores PSB address bits 15:10 (address bits 9:3 are always decoded) when decoding VGA IO transactions. Subject to other qualifications documented elsewhere, VGA I/O alias addresses are claimed by the IGD.
1	**IGD VGA Disable (IVD)—R/W.** 0 = Enable (Default). IGD claims VGA memory and IO cycles and the Sub-Class Code within Device 2 Class Code register is 00. 1 = Disable. The IGD does Not claim VGA cycles (Mem and IO), and the Sub-Class Code field within Device 2 Class Code register is 80h.
0	**Graphics Memory Size (GMEMS)—R/W.** This bit controls GMADR register in Device 2 0 = 128 MB (Default) 1 = 64 MB

Notes on Pre-Allocated Memory for Graphics

These Register Bits control the allocation of memory from main memory space for use as graphics local memory. The memory for TSEG is pre-allocated first and then the graphics local memory is pre-allocated. An example of this allocation mechanism is:

TOM equals 64 MB,
TSEG selected as 512 KB in size,
Graphics Local Memory selected as 1 MB in size
General System RAM available in system = 62.5 MB

General System RAM Range	00000000h to 03E7FFFFh
TSEG Address Range	03F80000h to 03FFFFFFh
TSEG pre-allocated from	03F80000h to 03FFFFFFh
Graphics Local Memory pre-allocated from	03E80000h to 03F7FFFFh

VGA Memory and I/O Space Decode Priority

1. Integrated Graphics Device (IGD), Device 2.
2. PCI-to-PCI bridge, Device 1.
3. Hub Interface.

3.5.1.16 DRB[0:3]—DRAM Row Boundary Register (Device 0)

Address Offset: 60–63h (64h–6Fh Reserved)
Default Value: 01h
Access: Read/Write
Size: 8 bits

The DRAM Row Boundary Register defines the upper boundary address of each DRAM row with a granularity of 32 MB. Each row has its own single-byte DRB register. For example, a value of 1 in DRB0 indicates that 32 MB of DRAM has been populated in the first row. Since the GMCH supports a total of four rows of memory, only DRB[0:3] are used.

Row0: 60h
Row1: 61h
Row2: 62h
Row3: 63h
64h–6Fh: Reserved

DRB0 = Total memory in row0 (in 32-MB increments)
DRB1 = Total memory in row0 + row1 (in 32-MB increments)
DRB2 = Total memory in row0 + row1 + row2 (in 32-MB increments)
DRB3 = Total memory in row0 + row1 + row2 + row3 (in 32-MB increments)

Each Row is represented by a byte. Each byte has the following format.

Bit	Description
7:0	**DRAM Row Boundary Address.** This 8-bit value defines the upper and lower addresses for each SDRAM row. This 8-bit value is compared against a set of address lines to determine the upper address limit of a particular row.

3.5.1.17 DRA—DRAM Row Attribute Register (Device 0)

Address Offset: 70–71h (72–77h Reserved)
Default Value: 00h
Access: R/W
Size: 8 bits

The DRAM Row Attribute Register defines the page sizes to be used when accessing different pairs of rows. Each nibble of information in the DRA registers describes the page size of a pair of rows:

Row0, 1: 70h
Row2, 3: 71h

7	6 4	3	2 0
R	Row Attribute for Row 1	R	Row Attribute for Row 0

7	6 4	3	2 0
R	Row Attribute for Row 3	R	Row Attribute for Row 2

Bit	Description
7	Reserved.
6:4	**Row Attribute for Odd-numbered Row.** This field defines the page size of the corresponding row. 000 = 2 KB 001 = 4 KB 010 = 8 KB 011 = 16 KB Others = Reserved
3	Reserved.
2:0	**Row Attribute for Even-numbered Row.** This field defines the page size of the corresponding row. 000 = 2 KB 001 = 4 KB 010 = 8 KB 011 = 16 KB Others = Reserved

3.5.1.18 DRT—DRAM Timing Register (Device 0)

Address Offset: 78–7Bh
Default Value: 00000000h
Access: Read/Write
Size: 32 bits

This register controls the timing of the DRAM controller.

Bit	Description
31:18	Intel Reserved.
17:15	**DRAM Idle Timer.** This field determines the number of clocks the SDRAM controller will remain in the idle state before it begins pre-charging all pages. 000 = *Infinite* 001 = 0 010 = 8 DRAM clocks 011 = 16 DRAM clocks 100 = 64 DRAM clocks Others = reserved
14:12	Intel Reserved.
11	**Activate to Precharge Delay (tRAS), MAX.** This bit controls the maximum number of clocks that a DRAM (SDR or DDR) bank can remain open. After this time period, the DRAM controller will guarantee to pre-charge the bank. Note that this time period may or may not be set to overlap with time period that requires a refresh to happen. The DRAM controller incudes a separate tRAS-MAX counter for every supported bank. With a maximum of four row and four banks per row, there are 16 counters. 0 = 120 µs 1 = Reserved.
10:9	**Activate to Precharge delay (tRAS), MIN.** This bit controls the number of DRAM clocks for tRAS minimum. 00 = 8 Clocks 01 = 7 Clocks 10 = 6 Clocks 11 = 5 Clocks
8:7	Intel Reserved.
6:5	**CAS# Latency (tCL).** **Encoding / SDR CL / DDR CL** 00 / Reserved / 2.5 01 / 3 / 2 10 / 2 / Reserved 11 / Reserved / Reserved
4	Intel Reserved.
3:2	**DRAM RAS# to CAS# Delay (tRCD).** This bit controls the number of clocks inserted between a row activate command and a read or write command to that row. 01 = 3 DRAM Clocks 10 = 2 DRAM Clocks 11 = Reserved
1:0	**DRAM RAS# Precharge (tRP).** This bit controls the number of clocks that are inserted between a row precharge command and an activate command to the same row. 00 = Intel Reserved 01 = 3 DRAM Clocks 10 = 2 DRAM Clocks 11 = Reserved

3.5.1.19 DRC—DRAM Controller Mode Register (Device 0)

Address Offset: 7C–7Fh
Default Value: 00000000h
Access: R/W, RO
Size: 32 bits

Bit	Description
31:30	**Revision Number (REV)—RO.** This field reflects the revision number of the format used for SDR/DDR register definition. Currently, this field must be 00, since this (rev "00") is the only existing version of the specification.
29	**Initialization Complete (IC)—R/W.** This bit is used for communication of software state between the memory controller and the BIOS. BIOS sets this bit to 1 after initialization of the DRAM memory array is complete.
28	**Dynamic Power-Down Mode Enable—R/W.** When set, the DRAM controller will put pair of rows into power down mode when all banks are pre-charged (closed). Once a bank is accessed, the relevant pair of rows is taken out of Power Down mode. The entry into power-down mode is performed by de-activation of CKE. The exit is performed by activation of CKE. 0 = Disable. 1 = Enable.
27:10	Intel Reserved.
9:7	**Refresh Mode Select (RMS)—R/W.** This field determines at what rate refreshes will be executed. 000 = Reserved 001 = Refresh enabled. Refresh interval 15.6 µs 010 = Refresh enabled. Refresh interval 7.8 µs 011 = Refresh enabled. Refresh interval 64 µs 111 = Refresh enabled. Refresh interval 64 clocks (fast refresh mode) Other = Reserved
6:4	**Mode Select (SMS)—R/W.** These bits select the special operational mode of the DRAM interface. The special modes are intended for initialization at power-up. 000 = Post Reset state: When the GMCH exits reset (power-up or otherwise), the mode select field is cleared to 000. During any reset sequence, while power is applied and reset is active, the GMCH deasserts all CKE signals. After internal reset is deasserted, CKE signals remain deasserted until this field is written to a value different than 000. On this event, all CKE signals are asserted. During suspend (S3, S4), GMCH internal signal triggers SDRAM controller to flush pending commands and enter all rows into Self-Refresh mode. As part of resume sequence, GMCH will be reset – which will clear this bit field to 000 and maintain CKE signals deasserted. After internal reset is deasserted, CKE signals remain de-asserted until this field is written to a value different than 000. On this event, all CKE signals are asserted. 001 = NOP Command Enable: All processor cycles to DRAM result in a NOP command on the DRAM interface. 010 = All Banks Pre-charge Enable: All processor cycles to DRAM result in an "all banks precharge" command on the DRAM interface. 011 = Mode Register Set Enable: All processor cycles to DRAM result in a "mode register" set command on the SDRAM interface. Host address lines are mapped to SDRAM address lines in order to specify the command sent. Host address HA[13:3] are mapped to memory address MA[11, 9:0]. 100 = Extended Mode Register Set Enable: All processor cycles to SDRAM result in an "extended mode register set" command on the SDRAM interface (DDR only). Host address lines are mapped to SDRAM address lines in order to specify the command sent. Host address lines are mapped to SDRAM address lines in order to specify the command sent. Host address HA[13:3] are mapped to memory address MA[11, 9:0]. 101 = Reserved 110 = CBR Refresh Enable: In this mode all processor cycles to SDRAM result in a CBR cycle on the SDRAM interface 111 = Normal operation

Bit	Description
3:1	Intel Reserved.
0	**DRAM Type (DT)—RO.** This bit indicates SDRAM type. 0 = Single Data Rate (SDR) SDRAM 1 = Double Data Rate (DDR) SDRAM

3.5.1.20 PAM[0:6]—Programmable Attribute Map Registers (Device 0)

Address Offset: 90–96h
Default Value: 00h
Attribute: R/W, RO
Size: 8 bits

The GMCH allows programmable memory attributes on 13 Legacy memory segments of various sizes in the 768-KB to 1-MB address range. Seven Programmable Attribute Map (PAM) Registers are used to support these features. Cacheability of these areas is controlled via the MTRR registers in the processor. Two bits are used to specify memory attributes for each memory segment. These bits apply to host initiator only access to the PAM areas. The GMCH forwards to main memory for any AGP, PCI or hub interface initiated accesses to the PAM areas. These attributes are:

- **RE - Read Enable.** When RE = 1, the host read accesses to the corresponding memory segment are claimed by the GMCH and directed to main memory. Conversely, when RE = 0, the host read accesses are directed to PCI_A.
- **WE - Write Enable.** When WE = 1, the host write accesses to the corresponding memory segment are claimed by the GMCH and directed to main memory. Conversely, when WE = 0, the host write accesses are directed to PCI_A.

The RE and WE attributes permit a memory segment to be Read Only, Write Only, Read/Write, or disabled. For example, if a memory segment has RE = 1 and WE = 0, the segment is Read Only.

Each PAM Register controls two regions, typically 16 KB in size. Each of these regions has a 4-bit field. The four bits that control each region have the same encoding and defined in the following table.

Bits [7, 3] Reserved	Bits [6, 2] Reserved	Bits [5, 1] WE	Bits [4, 0] RE	Description
X	X	0	0	Disabled DRAM is disabled and all accesses are directed to the Hub Interface A. The MCH does not respond as a PCI target for any read or write access to this area.
X	X	0	1	Read Only. Reads are forwarded to DRAM and writes are forwarded to the Hub Interface A for termination. This write protects the corresponding memory segment. The MCH will respond as an AGP or the Hub Interface A target for read accesses but not for any write accesses.
X	X	1	0	Write Only. Writes are forwarded to DRAM and reads are forwarded to the Hub Interface for termination. The MCH will respond as an AGP or Hub Interface A target for write accesses but not for any read accesses.
X	X	1	1	Read/Write. This is the normal operating mode of main memory. Both read and write cycles from the host are claimed by the MCH and forwarded to DRAM. The MCH will respond as an AGP or the Hub Interface A target for both read and write accesses.

At the time that a hub interface or AGP accesses to the PAM region may occur, the targeted PAM segment must be programmed to be both readable and writeable.

As an example, consider BIOS that is implemented on the expansion bus. During the initialization process, the BIOS can be shadowed in main memory to increase the system performance. When BIOS is shadowed in main memory, it should be copied to the same address location. To shadow the BIOS, the attributes for that address range should be set to write only. The BIOS is shadowed by first doing a read of that address. This read is forwarded to the expansion bus. The host then does a write of the same address, which is directed to main memory. After the BIOS is shadowed, the attributes for that memory area are set to read only so that all writes are forwarded to the expansion bus. Figure 3-4 and Table 3-2 show the PAM registers and the associated attribute bits.

Figure 3-4. PAM Register Attributes

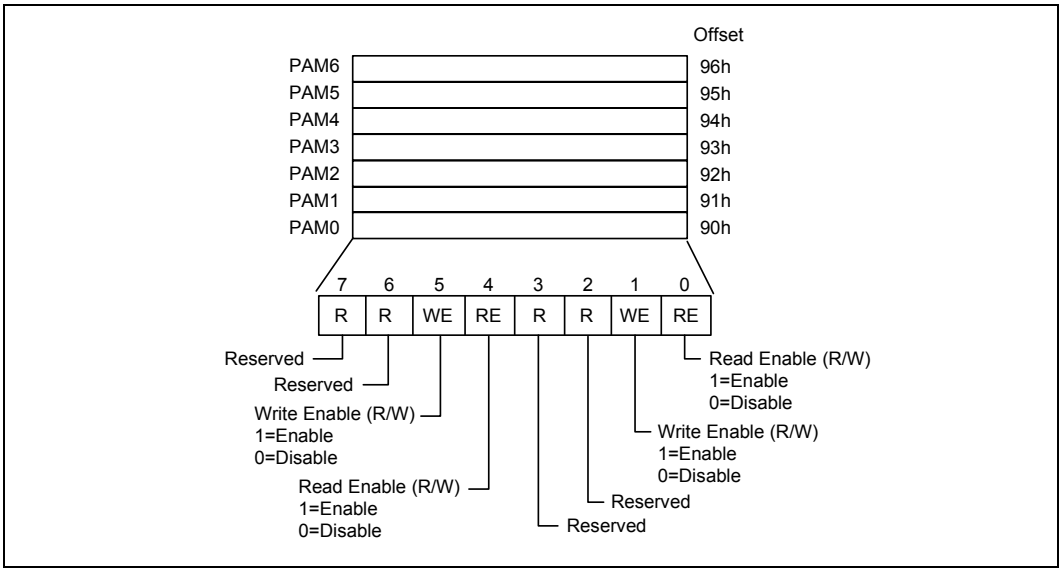

Table 3-2. PAM Register Attributes

PAM Reg	Attribute Bits				Memory Segment	Comments	Offset
PAM0[3:0]	Reserved						90h
PAM0[7:4]	R	R	WE	RE	0F0000h–0FFFFFh	BIOS Area	90h
PAM1[3:0]	R	R	WE	RE	0C0000h–0C3FFFh	ISA Add-on BIOS	91h
PAM1[7:4]	R	R	WE	RE	0C4000h–0C7FFFh	ISA Add-on BIOS	91h
PAM2[3:0]	R	R	WE	RE	0C8000h–0CBFFFh	ISA Add-on BIOS	92h
PAM2[7:4]	R	R	WE	RE	0CC000h–0CFFFFh	ISA Add-on BIOS	92h
PAM3[3:0]	R	R	WE	RE	0D0000h–0D3FFFh	ISA Add-on BIOS	93h
PAM3[7:4]	R	R	WE	RE	0D4000h–0D7FFFh	ISA Add-on BIOS	93h
PAM4[3:0]	R	R		RE	0D8000h–0DBFFFh	ISA Add-on BIOS	94h
PAM4[7:4]	R	R	WE	RE	0DC000h–0DFFFFh	ISA Add-on BIOS	94h
PAM5[3:0]	R	R	WE	RE	0E0000h–0E3FFFh	BIOS Extension	95h
PAM5[7:4]	R	R	WE	RE	0E4000h–0E7FFFh	BIOS Extension	95h
PAM6[3:0]	R	R	WE	RE	0E8000h–0EBFFFh	BIOS Extension	96h
PAM6[7:4]	R	R	WE	RE	0EC000h–0EFFFFh	BIOS Extension	96h

For details on overall system address mapping scheme, refer to Chapter 5.

Microsoft MS-DOS* Application Area (00000h–9FFFh)

The MS-DOS* area is 640 KB in size and it is further divided into two parts. The 512-KB area at 0 to 7FFFFh is always mapped to the main memory controlled by the GMCH, while the 128-KB address range from 080000h to 09FFFFh can be mapped to PCI_A or to main DRAM. By default this range is mapped to main memory and can be declared as a main memory hole (accesses forwarded to PCI_A) via the GMCH FDHC configuration register.

Video Buffer Area (A0000h–BFFFFh)

Attribute bits do not control this 128-KB area. The host -initiated cycles in this region are always forwarded to either PCI_A or AGP unless this range is accessed in SMM mode. **Routing of accesses is controlled by the Legacy VGA control mechanism of the "virtual" PCI-to-PCI bridge device embedded within the GMCH.**

This area can be programmed as SMM area via the SMRAM register. When used as a SMM space, this range cannot be accessed from the hub interface or AGP.

Expansion Area (C0000h–DFFFFh)

This 128-KB area is divided into eight, 16-KB segments that can be assigned with different attributes via the PAM Control registers as defined by Table 3-2.

Extended System BIOS Area (E0000h–EFFFFh)

This 64-KB area is divided into four, 16-KB segments that can be assigned with different attributes via the PAM Control registers as defined by Table 3-2.

System BIOS Area (F0000h–FFFFFh)

This area is a single, 64-KB segment, which can be assigned with different attributes via the PAM Control registers as defined by Table 3-2.

3.5.1.21 FDHC—Fixed SDRAM Hole Control Register (Device 0)

Address Offset: 97h
Default Value: 00h
Access: R/W, RO
Size: 8 bits

This 8-bit register controls a fixed SDRAM hole from 15 MB–16 MB.

Bit	Description
7	**Hole Enable (HEN).** This field enables a memory hole in SDRAM space. The SDRAM that lies "behind" this space is not remapped. 0 = No memory hole 1 = Memory hole from 15 MB to 16 MB.
6:0	Reserved.

3.5.1.22 SMRAM—System Management RAM Control Register (Device 0)

Address Offset: 9Dh
Default Value: 02h
Access: R/W, RO, L
Size: 8 bits

The SMRAMC register controls how accesses to Compatible and Extended SMRAM spaces are treated. The open, close, and lock bits function only when G_SMRAME bit is set to a 1. Also, the open bit must be reset before the lock bit is set.

Bit	Description
7	Reserved.
6	**SMM Space Open (D_OPEN)—R/W, L.** When D_OPEN=1 and D_LCK=0, the SMM space SDRAM is made visible even when SMM decode is not active. This is intended to help BIOS initialize SMM space. Software should ensure that D_OPEN=1 and D_CLS=1 are not set at the same time.
5	**SMM Space Closed (D_CLS)—R/W.** When D_CLS = 1, SMM space SDRAM is not accessible to data references, even if SMM decode is active. Code references may still access SMM space SDRAM. This will allow SMM software to reference through SMM space to update the display even when SMM is mapped over the VGA range. Software should ensure that D_OPEN=1 and D_CLS=1 are not set at the same time. Note that the D_CLS bit only applies to Compatible SMM space.
4	**SMM Space Locked (D_LCK)—R/W, L.** When D_LCK is set to 1, D_OPEN is reset to 0; D_LCK, D_OPEN, C_BASE_SEG, H_SMRAM_EN, TSEG_SZ and TSEG_EN become read only. D_LCK can be set to 1 via a normal configuration space write but can only be cleared by a Full Reset. The combination of D_LCK and D_OPEN provide convenience with security. The BIOS can use the D_OPEN function to initialize SMM space and then use D_LCK to "lock down" SMM space in the future so that no application software (or BIOS itself) can violate the integrity of SMM space, even if the program has knowledge of the D_OPEN function.
3	**Global SMRAM Enable (G_SMRARE)—R/W, L.** If set to a 1, Compatible SMRAM functions are enabled, providing 128 KB of SDRAM accessible at the A0000h address while in SMM (ADS# with SMM decode). To enable Extended SMRAM function this bit has be set to 1. Refer to Chapter 5 for more details. Once D_LCK is set, this bit becomes read only.
2:0	**Compatible SMM Space Base Segment (C_BASE_SEG)—R/W, L.** This field indicates the location of SMM space. SMM SDRAM is not remapped. It is simply made visible if the conditions are right to access SMM space, otherwise the access is forwarded to the hub interface. Since the GMCH supports only the SMM space between A0000h and BFFFFh, this field is hardwired to 010.

3.5.1.23 ESMRAMC—Extended System Management RAM Control Register (Device 0)

Address Offset: 9Eh
Default Value: 38h
Access: R/W, R/WC, RO, L
Size: 8 bits

The Extended SMRAM register controls the configuration of Extended SMRAM space. The Extended SMRAM (E_SMRAM) memory provides a write-back cacheable SMRAM memory space that is above 1 MB.

Note: When Extended SMRAM is used, the maximum amount of SDRAM accessible is limited to 256 MB.

Bit	Description
7	**Enable High SMRAM (H_SMRAME)—R/W, L.** This bit controls the SMM memory space location (i.e., above 1 MB or below 1 MB). 0 = Disable 1 = Enable. When G_SMRAME is 1 and H_SMRAME this bit is set to 1, the high SMRAM memory space is enabled. SMRAM accesses within the range 0FEDA0000h to 0FEDBFFFFh are remapped to SDRAM addresses within the range 000A0000h to 000BFFFFh. **NOTE:** Once D_LCK has been set, this bit becomes read only.
6	**Invalid SMRAM Access (E_SMERR)—R/WC.** 0 = Software must write a 1 to this bit to clear it. 1 = This bit is set when processor has accessed the defined memory ranges in Extended SMRAM (High Memory and T-segment) while not in SMM space and with the D-OPEN bit = 0.
5	**SMRAM Cacheable (SM_CACHE)—RO.** Hardwired to 1.
4	**L1 Cache Enable for SMRAM (SM_L1)—RO.** Hardwired to 1.
3	**L2 Cache Enable for SMRAM (SM_L2)—RO.** Hardwired to 1.
2:1	**TSEG Size (TSEG_SZ)—R/W, L.** This field selects the size of the TSEG memory block if enabled. This memory is taken from the top of SDRAM space (TOM – TSEG_SZ), which is no longer claimed by the memory controller (all accesses to this space are sent to the hub interface if TSEG_EN is set). 00 = Reserved 01 = Reserved 10 = (TOM – 512 k) to TOM 11 = (TOM – 1 M) to TOM **NOTE:** Once D_LCK is set, this bit becomes read only.
0	**TSEG Enable (TSEG_EN)—R/W, L.** 0 = Disable. 1 = Enable. Enabling of SMRAM memory for Extended SMRAM space only. When G_SMRAME =1 and TSEG_EN = 1, the TSEG is enabled to appear in the appropriate physical address space. **NOTE:** Once D_LCK is set, this bit becomes read only.

3.5.1.24 ACAPID—AGP Capability Identifier Register (Device 0)

Address Offset: A0–A3h
Default Value: 00200002h
Access: RO
Size: 32 bits

This register provides standard identifier for AGP capability.

Bit	Description
31:24	Reserved.
23:20	**Major AGP Revision Number (MAJREV).** These bits provide a major revision number of *Accelerated Graphics Port interface Specification, Revision 2.0* to which this version of GMCH conforms. This field is hardwired to value of 0010b (i.e., implying Rev 2.0).
19:16	**Minor AGP Revision Number (MINREV).** These bits provide a minor revision number of *Accelerated Graphics Port Interface Specification, Revision* 2.0 to which this version of GMCH conforms. This number is hardwired to value of 0000 which implies that the revision is 2.0. Together with major revision number this field identifies the GMCH as an *Accelerated Graphics Port Interface Specification, Revision 2.0* compliant device.
15:8	**Next Capability Poin.ter (NCAPTR):** AGP capability is the last capability described via the capability pointer mechanism and therefore these bits are hardwired to 0 to indicate the end of the capability linked list.
7:0	**AGP Capability ID (CAPID).** This field identifies the linked list item as containing AGP registers. This field has a value of 0000_0010b assigned by the PCI SIG.

3.5.1.25 AGPSTAT—AGP Status Register (Device 0)

Address Offset: A4–A7h
Default Value: 1F000217h
Access: RO
Size: 32 bits

This register reports AGP device capability/status.

Bit	Description
31:24	**Request Queue (RQ).** This field is hardwired to 1Fh to indicate a maximum of 32 outstanding AGP command requests can be handled by the GMCH. This field contains the maximum number of AGP command requests the GMCH is configured to manage. Default =1Fh to allow a maximum of 32 outstanding AGP command requests.
23:10	Reserved.
9	**Side Band Addressing Support (SBA).** This bit indicates that the GMCH supports side band addressing. It is hardwired to 1.
8:6	Reserved.
5	**Greater Than Four Gigabyte Support (GT4GIG).** This bit indicates that the GMCH does not support addresses greater than 4 GB. It is hardwired to 0.
4	**Fast Write Support (FW).** This bit indicates that the GMCH supports Fast Writes from the processor to the AGP master. It is hardwired to a 1.
3	Reserved.
2:0	**Data Rate Support (RATE).** After reset the GMCH reports its data transfer rate capability. Bit 0 identifies if the AGP device supports 1X data transfer mode, bit 1 identifies if AGP device supports 2X data transfer mode, bit 2 identifies if AGP device supports 4X data transfer

3.5.1.26 AGPCMD—AGP Command Register (Device 0)

Address Offset: A8–ABh
Default Value: 00000000h
Access: RO, R/W
Size: 32 bits

This register provides control of the AGP operational parameters.

Bit	Description
31:10	Intel Reserved.
9	**SideBand Addressing Enable (SBAEN).** 0 = Disable. 1 = Enable.
8	**AGP Enable (AGPEN).** When this bit is reset to 0, the GMCH will ignore all AGP operations, including the sync cycle. Any AGP operations received while this bit is set to 1 will be serviced even if this bit is reset to 0. If this bit transitions from a 1 to a 0 on a clock edge in the middle of an SBA command being delivered in 1X mode the command will be issued. When this bit is set to 1 the GMCH will respond to AGP operations delivered via PIPE#, or to operations delivered via SBA if the AGP Side Band Enable bit is also set to 1.
7:5	Intel Reserved.
4	**Fast Write Enable (FWEN).** 0 = Disable. When this bit is 0 or when the data rate bits are set to 1X mode, the Memory Write transactions from the GMCH to the AGP master use standard PCI protocol. 1 = Enable. The GMCH uses the Fast Write protocol for Memory Write transactions from the GMCH to the AGP master. Fast Writes will occur at the data transfer rate selected by the data rate bits (2:0) in this register.
3	Intel Reserved.
2:0	**Data Rate Enable (DRATE).** The setting of these bits determines the AGP data transfer rate. One (and only one) bit in this field must be set to indicate the desired data transfer rate. The same bit must be set on both master and target. 001 = 1X Transfer Mode 010 = 2X Transfer Mode 100 = 4X Transfer Mode

3.5.1.27 AGPCTRL—AGP Control Register (Device 0)

Address Offset: B0–B3h
Default Value: 00000000h
Access: RO, R/W
Size: 32 bits

This register enables additional control of the AGP interface.

Bit	Description
31:8	Intel Reserved.
7	**GTLB Enable (GTLBEN).** 0 = Disable (default). The GTLB is flushed by clearing the valid bits associated with each entry. 1 = Enable. Normal operations of the Graphics Translation Lookaside Buffer.
6:0	Intel Reserved.

3.5.1.28 APSIZE—Aperture Size Register (Device 0)

Address Offset: B4h
Default Value: 00h
Access: RO, R/W
Size: 8 bits

This register determines the effective size of the Graphics Aperture used for a particular GMCH configuration. This register can be updated by the GMCH-specific BIOS configuration sequence before the PCI standard bus enumeration sequence takes place. If the register is not updated then a default value will select an aperture of maximum size (i.e., 256 MB). The size of the table that will correspond to a 256-MB aperture is not practical for most applications and therefore these bits must be programmed to a smaller practical value that will force adequate address range to be requested via APBASE register from the PCI configuration software.

Bit	Description
7:6	Reserved.
5:0	**Graphics Aperture Size (APSIZE.** Each bit in APSIZE[5:0] operates on similarly ordered bits in APBASE[27:22] of the Aperture Base configuration register. When a particular bit of this field is 0 it forces the similarly ordered bit in APBASE[27:22] to behave as hardwired to 0. When a particular bit of this field is set to 1 it allows corresponding bit of the APBASE[27:22] to be read/write accessible. Default The default value (APSIZE[5:0]=000000b) forces the default APBASE[27:22] to read as 000000b (i.e. all bits respond as hardwired to 0). This provides the maximum aperture size of 256 MB. As another example, programming APSIZE[5:0] to 111000b hardwires APBASE[24:22] to 000b and enables APBASE[27:25] to be read/write programmable. 000000 = 256-MB Aperture Size 100000 = 128-MB Aperture Size 110000 = 64-MB Aperture Size 111000 = 32-MB Aperture Size 111100 = 16-MB Aperture Size 111110 = 8-MB Aperture Size 111111 = 4-MB Aperture Size

3.5.1.29 ATTBASE—Aperture Translation Table Register (Device 0)

Address Offset: B8–BBh
Default Value: 00000000h
Access: Read Only, Read/Write
Size: 32 bits

This register provides the starting address of the Graphics Aperture Translation Table Base located in the main SDRAM. This value is used by the GMCH's Graphics Aperture address translation logic (including the GTLB logic) to obtain the appropriate address translation entry required during the translation of the aperture address into a corresponding physical SDRAM address. The ATTBASE register may be dynamically changed.

Bit	Description
31:12	**Aperture Translation Table Base (TTABLE).** This field contains a pointer to the base of the translation table used to map memory space addresses in the aperture range to addresses in main memory. **NOTE:** This field should be modified only when the GTLB has been disabled.
11:0	Reserved.

3.5.1.30 AMTT—AGP MTT Control Register (Device 0)

Address Offset: BCh
Default Value: 10h
Access: Read Only, Read/Write
Size: 8 bits

AMTT is an 8-bit register that controls the amount of time that the GMCH's arbiter allows AGP/PCI master to perform multiple back-to-back transactions. The GMCH's AMTT mechanism is used to optimize the performance of the AGP master (using PCI semantics) that performs multiple back-to-back transactions to fragmented memory ranges (and as a consequence it can not use long burst transfers). The AMTT mechanism applies to the host-AGP/PCI transactions as well and it assures the processor of a fair share of the AGP/PCI interface bandwidth.

The number of clocks programmed in the AMTT represents the guaranteed time slice (measured in 66 MHz clocks) allotted to the current agent (either AGP/PCI master or Host bridge) after which the AGP arbiter will grant the bus to another agent. The default value of AMTT is 00h and disables this function. The AMTT value can be programmed with 8 clock granularity. For example, if the AMTT is programmed to 18h, then the selected value corresponds to the time period of 24 AGP (66 MHz) clocks.

Bit	Description
7:3	**Multi-Transaction Timer Count Value (MTTC).** The number programmed into these bits represents the time slice (measured in eight, 66 MHz clock granularity) allotted to the current agent (either AGP/PCI master or GMCH bridge) after which the AGP arbiter will grant the bus to another agent.
2:0	Reserved.

3.5.1.31 LPTT—AGP Low Priority Transaction Timer Register (Device 0)

Address Offset: BDh
Default Value: 10h
Access: R/W
Size: 8 bits

LPTT is an 8-bit register similar in function to AMTT. This register is used to control the minimum tenure on the AGP for low priority data transaction (both reads and writes) issued using PIPE# or SB mechanisms.

The number of clocks programmed in the LPTT represents the guaranteed time slice (measured in 66 MHz clocks) allotted to the current low priority AGP transaction data transfer state. This does not necessarily apply to a single transaction but it can span over multiple low-priority transactions of the same type. After this time expires the AGP arbiter may grant the bus to another agent if there is a pending request. The LPTT does not apply in the case of high-priority request where ownership is transferred directly to high-priority requesting queue. The default value of LPTT is 00h and disables this function. The LPTT value can be programmed with 8-clock granularity. For example, if the LPTT is programmed to 10h, then the selected value corresponds to the time period of 16 AGP (66 MHz) clocks.

Bit	Description
7:3	**Low Priority Transaction Timer Count Value (LPTTC).** The number of clocks programmed in these bits represents the time slice (measured in eight, 66 MHz clock granularity) allotted to the current low priority AGP transaction data transfer state).
2:0	Reserved.

3.5.1.32 GMCHCFG—GMCH Configuration Register (Device 0)

Address Offset: C6–C7h
Default Value: 0C01h
Access: R/W, RO
Size: 16 bits

Bit	Description
15:13	Intel Reserved.
12	**Core/PSB Frequency Select (PSBFREQ)—RO.** The default value of this bit is set by the strap assigned to pin PSBSEL and is latched at the rising edge of PWROK. 0 = PSB frequency is 400 MHz (PSBSEL sampled low on PWROK assertion) 1 = PSB frequency is 533 MHz (PSBSEL sampled high on PWROK assertion)
11:10	**System Memory Frequency Select (SMFREQ)—R/W[1].** 00 = Intel Reserved 01 = Intel Reserved 10 = System Memory frequency is set to 133 MHz (SDR133, DDR266) 11 = System Memory frequency is set to 100 MHz (DDR200) (Default) **NOTE:** 1. When writing a new value to this bit, a warm reset through the Intel® ICH4 must be executed before the bit becomes effective. This must be enforced by BIOS/SW. However, changing this bit in SW requires a “warm reset”
9:6	Intel Reserved.
5	**MDA Present (MDAP).** This bit works with the VGA enable bits in the BCTRL1 register of Device 1 to control the routing of processor initiated transactions targeting MDA compatible I/O and memory address ranges. This bit should not be set if Device 1's VGA enable bit is not set. If Device 1's VGA enable bit is set, then accesses to I/O address range x3BCh-x3BFh are forwarded to the hub interface. If the VGA enable bit is not set then accesses to IO address range x3BCh-x3BFh are treated just like any other I/O accesses. That is, the cycles are forwarded to AGP if the address is within the corresponding IOBASE and IOLIMIT and ISA enable bit is not set; otherwise, they are forwarded to the hub interface. MDA resources are: Memory: 0B0000h–0B7FFFh I/O: 3B4h, 3B5h, 3B8h, 3B9h, 3BAh, 3BFh (including ISA address aliases, A[15:10] are not used in decode) Any I/O reference that includes the I/O locations listed above, or their aliases, will be forwarded to hub interface even if the reference includes I/O locations not listed above. Refer to the Chapter 5 for further information.
4	Intel Reserved.
3 RO	**AGP Mode (AGP/DVO#)—RO.** This bit is Read Only and reflects the ADD_DETECT strap value. This strap bit determines the function of the AGP I/O signal. 0 = 2xDVO 1 = AGP When the strap is sampled low, this bit will be a 0 and DVO mode will be selected. When the strap is sampled high, this bit will be a 1 and AGP mode will be selected. Note that when this bit is set to 0 (DVO mode), Device 1 is disabled (configuration cycles fall-through to HI) and the Next Pointer field in CAPREG will be hardwired to zeros.
2	**PSB IOQ Depth (IOQD)—RO.** This bit is RO and reflects the HA[7]# strap value. It indicates the depth of the PSB IOQ. 0 = 1 deep 1 = 12 on the bus, 8 on the GMCH When the strap is sampled low, this bit will be a 0 and the PSB IOQ depth is set to 1. When the strap is sampled high, this bit will be a 1 and the PSB IOQ depth is set to the maximum (12 on the bus, 8 on the GMCH).
1:0	Intel Reserved.

3.5.1.33 ERRSTS—Error Status Register (Device 0)

Address Offset: C8–C9h
Default Value: 0000h
Access: R/WC
Size: 16 bits

This register is used to report various error conditions via the SERR HI messaging mechanism. An SERR HI message is generated on a zero to one transition of any of these flags (if enabled by the ERRCMD and PCICMD registers). These bits are set regardless of whether or not the SERR is enabled and generated.

Note: Software clears bits in this register by writing a 1 to the bit position.

Bit	Description
15:10	Intel Reserved.
9	**Non-DRAM Lock Error (NDLOCK).** 1 = The GMCH has detected a lock operation to memory space that did not map into SDRAM.
8	**Software Generated SMI Flag.** 1 = This indicates the source of an SMI was a Software SMI Trigger.
7	Intel Reserved.
6	**SERR on HI Target Abort (TAHLA).** 1 = GMCH has detected that an GMCH originated hub interface cycle was terminated with a Target Abort completion packet or special cycle.
5	**GMCH Detects Unimplemented HI Special Cycle (HIAUSC).** 1 = GMCH detected an Unimplemented Special Cycle on the hub interface.
4	**AGP Access Outside of Graphics Aperture Flag (OOGF).** 1 = AGP access occurred to an address that is outside of the graphics aperture range.
3	**Invalid AGP Access Flag (IAAF).** 1 = AGP access was attempted outside of the graphics aperture and either to the 640 KB –1 MB range or above the top of memory.
2	**Invalid Graphics Aperture Translation Table Entry (ITTEF).** 1 = An invalid translation table entry was returned in response to an AGP access to the graphics aperture.
1:0	Intel Reserved.

3.5.1.34 ERRCMD—Error Command Register (Device 0)

Address Offset: CA–CBh
Default Value: 0000h
Access: RO, R/W
Size: 16 bits

This register controls the GMCH responses to various system errors. Since the GMCH does not have an SERR# signal, SERR messages are passed from the GMCH to the ICH over HI. When a bit in this register is set, a SERR message will be generated on HI whenever the corresponding flag is set in the ERRSTS register. The actual generation of the SERR message is globally enabled for Device 0 via the PCI Command register.

Bit	Description
15:10	Intel Reserved.
9	**SERR on Non-DRAM Lock (LCKERR).** 1 = Disable. 1 = Enable. GMCH generates a HI SERR special cycle when a processor lock cycle is detected that does not hit SDRAM.
8:7	Intel Reserved.
6	**SERR on Target Abort on HI Exception (TAHLA).** 0 = Disable. 1 = Enable. GMCH generates an SERR special cycle over HI when an GMCH originated HI cycle is completed with a Target Abort completion packet or special cycle.
5	**SERR on Detecting HI Unimplemented Special Cycle (HIAUSCERR).** SERR messaging for Device 0 is globally enabled in the PCICMD register. 0 = Disable. GMCH does not generate an SERR message for this event. 1 = Enable. GMCH generates an SERR message over HI when an Unimplemented Special Cycle is received on the HI.
4	**SERR on AGP Access Outside of Graphics Aperture (OOGF).** 0 = Disable. Reporting of this condition is disabled. 1 = Enable. GMCH generates an SERR special cycle over HI when an AGP access occurs to an address outside of the graphics aperture.
3	**SERR on Invalid AGP Access (IAAF).** 0 = Disable. Invalid AGP Access condition is not reported. 1 = Enable. GMCH generates an SERR special cycle over HI when an AGP access occurs to an address outside of the graphics aperture and either to the 640 KB –1 MB range or above the top of memory. I
2	**SERR on Invalid Translation Table Entry (ITTEF).** 0 = Disable. Reporting of this condition is disabled. 1 = Enable. GMCH generates an SERR special cycle over HI when an invalid translation table entry was returned in response to an AGP access to the graphics aperture.
1:0	Intel Reserved.

3.5.1.35 SMICMD—SMI Command Register (Device 0)

Address Offset: CC–CDh
Default Value: 0000h
Access: RO, R/W
Size: 16 bits

This register enables various errors to generate a SMI message via the hub interface.

Bit	Description
15:0	Intel Reserved.

3.5.1.36 SCICMD—SCI Command Register (Device 0)

Address Offset: CE–CDh
Default Value: 0000h
Access: RO, R/W
Size: 16 bits

This register enables various errors to generate a SMI message via the hub interface.

Bit	Description
15:0	Intel Reserved.

3.5.1.37 SKPD—Scratchpad Data Register (Device 0)

Address Offset: DEh
Default Value: 0000h
Access: R/W
Size: 16 bits

Bit	Description
15:0	**Scratchpad (SCRTCH).** These bits are simply R/W storage bits that have no effect on the GMCH functionality.

3.5.1.38 CAPREG—Capability Identification Register (Device 0)

Address Offset: E4h–E8h
Default: 0x_x105_A009h
Access: RO
Size 40 bits

Bit	Description
39:28	**Part Identifier.** 0E1h = 82845GL 0B1h = 82845GV 000h = 82845G with Revision ID of 01h 030h = 82845G with Revision ID of 03h
27:24	**CAPREG Version.** This field has the value 0001b to identify the first revision of the CAPREG definition.
23:16	**Cap_length.** This field has the value 05h indicating the structure length.
15:8	**Next_Pointer.** This field has the value A0h pointing to the next capabilities register, AGP Capability Identifier Register (ACAPID). If AGP is disabled (IGDIS = 0), since this is the last pointer in the device, it is set to 00h signifying the end of the capabilities linked list.
7:0	**CAP_ID.** This field has the value 09h to identify the CAP_ID assigned by the PCI SIG for Vendor Dependent CAP_PTR.

3.5.2 Host-to-AGP Bridge Registers (Device 1)

The host-to-AGP Bridge (virtual PCI-to-PCI) registers are in Device 1. This section contains the PCI configuration registers listed in order of ascending offset address. Table 3-3 provides the register address map for this device.

Table 3-3. Host-to-AGP Register Address Map (Device 1)

Address Offset	Symbol	Register Name	Default Value	Access
00–01h	VID1	Vendor Identification	8086h	RO
02–03h	DID1	Device Identification	2561h	RO
04–05h	PCICMD1	PCI Command	0000h	RO, R/W
06–07h	PCISTS1	PCI Status	00A0h	RO, R/WC
08h	RID1	Revision Identification	see register description	RO
09h	—	Intel Reserved	—	—
0Ah	SUBC1	Sub-Class Code	04h	RO
0Bh	BCC1	Base Class Code	06h	RO
0Ch	—	Intel Reserved	—	—
0Dh	MLT1	Master Latency Timer	00h	RO, R/W
0Eh	HDR1	Header Type	01h	RO
0F–17h	—	Intel Reserved	—	—
18h	PBUSN1	Primary Bus Number	00h	RO
19h	SBUSN1	Secondary Bus Number	00h	R/W
1Ah	SUBUSN1	Subordinate Bus Number	00h	R/W
1Bh	SMLT1	Secondary Bus Master Latency Timer	00h	RO, R/W
1Ch	IOBASE1	I/O Base Address	F0h	RO, R/W
1Dh	IOLIMIT1	I/O Limit Address	00h	RO, R/W
1E–1Fh	SSTS1	Secondary Status	02A0h	RO, R/WC
20–21h	MBASE1	Memory Base Address	FFF0h	RO, R/W
22–23h	MLIMIT1	Memory Limit Address	0000h	RO, R/W
24–25h	PMBASE1	Prefetchable Memory Base Limit Address	FFF0h	RO, R/W
26–27h	PMLIMIT1	Prefetchable Memory Limit Address	0000h	RO, R/W
28–3Dh	—	Intel Reserved	—	—
3Eh	BCTRL1	Bridge Control	00h	RO, R/W
40h	ERRCMD1	Error Command	00h	RO, R/W
41–FFh	—	Intel Reserved	—	—

3.5.2.1 VID1—Vendor Identification Register (Device 1)

Address Offset: 00–01h
Default Value: 8086h
Access: RO
Size: 16 bits

The VID Register contains the vendor identification number. This 16-bit register combined with the Device Identification Register uniquely identify any PCI device. Writes to this register have no effect.

Bit	Description
15:0	**Vendor Identification Device 1 (VID1).** This register field contains the PCI standard identification for Intel, 8086h.

3.5.2.2 DID1—Device Identification Register (Device 1)

Address Offset: 02–03h
Default Value: 2561h
Access: RO
Size: 16 bits

This 16-bit register combined with the Vendor Identification register uniquely identifies any PCI device.

Bit	Description
15:0	**Device Identification Number (DID).** A 16 bit-value assigned to the GMCH Device 1 = 2561h.

3.5.2.3 PCICMD1—PCI Command Register (Device 1)

Address Offset: 04–05h
Default Value: 0000h
Access: RO, R/W
Size: 16 bits

Bit	Description
15:10	Reserved.
9	**Fast Back-to-Back Enable (FB2B)—RO.** Hardwired to 0.
8	**SERR Message Enable (SERRE).** This bit is a global enable bit for Device 1 SERR messaging. The GMCH communicates the SERR# condition by sending an SERR message to the ICH. If this bit is set to a 1, the GMCH is enabled to generate SERR messages over HI for specific Device 1 error conditions that are individually enabled in the BCTRL1 register. The error status is reported in the PCISTS1 register. If SERRE1 is reset to 0, then the SERR message is not generated by the GMCH for Device 1.
7	**Address/Data Stepping (ADSTEP).** Hardwired to 0. Address/data stepping is not implemented in the GMCH.
6	**Parity Error Enable (PERRE).** Hardwired to 0. Parity checking is not supported on the primary side of this device.
5	Reserved.
4	**Memory Write and Invalidate Enable (MWIE).** Hardwired to 0.
3	**Special Cycle Enable (SCE).** Hardwired to 0.
2	**Bus Master Enable (BME).** 0 = Disable (Default). AGP Master initiated Frame# cycles are ignored by the GMCH. The result is a master abort. Ignoring incoming cycles on the secondary side of the PCI-to-PCI bridge effectively disabled the bus master on the primary side. 1 = AGP master initiated Frame# cycles are accepted by the GMCH if they hit a valid address decode range. This bit has no affect on AGP Master originated SBA or PIPE# cycles.
1	**Memory Access Enable (MAE).** 0 = Disable. All of Device 1's memory space is disabled. 1 = Enable. This bit must be set to 1 to enable the Memory and Pre-fetchable memory address ranges defined in the MBASE1, MLIMIT1, PMBASE1, and PMLIMIT1 registers.
0	**IO Access Enable (IOAE).** 0 = Disable. All of Device 1's I/O space is disabled. 1 = Enable. This bit must be set to1 to enable the I/O address range defined in the IOBASE1, and IOLIMIT1 registers.

3.5.2.4 PCISTS1—PCI Status Register (Device 1)

Address Offset: 06–07h
Default Value: 00A0h
Access: RO, R/WC
Size: 16 bits

PCISTS1 is a 16-bit status register that reports the occurrence of error conditions associated with primary side of the "virtual" PCI-to-PCI bridge embedded within the GMCH.

Bit	Description
15	**Detected Parity Error (DPE)—RO.** Hardwired to 0. Parity is not supported on the primary side of this device.
14	**Signaled System Error (SSE)—R/WC.** 0 = Software clears this bit by writing a 1 to it. 1 = This bit is set to 1 when GMCH Device 1 generates an SERR message over the hub interface for any enabled Device 1 error condition. Device 1 error conditions are enabled in the ERRCMD, PCICMD1 and BCTRL1 registers. Device 1 error flags are read/reset from the ERRSTS and SSTS1 register.
13	**Received Master Abort Status (RMAS)—RO.** Hardwired to 0. The concept of a master abort does not exist on primary side of this device.
12	**Received Target Abort Status (RTAS)—RO.** Hardwired to 0. The concept of a target abort does not exist on primary side of this device. T
11	**Signaled Target Abort Status (STAS)—RO.** Hardwired to 0. The concept of a target abort does not exist on primary side of this device.
10:9	**DEVSEL# Timing (DEVT)—RO.** Hardwired to 00. The GMCH does not support subtractive decoding devices on bus 0. This bit field is therefore hardwired to 00 to indicate that Device 1 uses the fastest possible decode.
8	**Data Parity Detected (DPD)—RO.** Hardwired to 0. Parity is not supported on the primary side of this device.
7	**Fast Back-to-Back (FB2B)—RO.** Hardwired to 1. This indicates that the AGP/PCI_B interface always supports fast back to back writes.
6	Reserved.
5	**66/60MHz Capability (CAP66)—RO.** Hardwired to 1. The AGP/PCI bus is 66 MHz capable.
4:0	Reserved.

3.5.2.5 RID1—Revision Identification Register (Device 1)

Address Offset: 08h
Default Value: see table below
Access: RO
Size: 8 bits

This register contains the revision number of the GMCH Device 1.

Bit	Description
7:0	**Revision Identification Number (RID).** This is an 8-bit value that indicates the revision identification number for the GMCH Device 1. **82845G and 82845GL GMCH** 01h = A1 Stepping 03h = B1 Stepping **82845GV GMCH** 01h = A1 Stepping

3.5.2.6 SUBC1—Sub-Class Code Register (Device 1)

Address Offset: 0Ah
Default Value: 04h
Access: RO
Size: 8 bits

This register contains the Sub-Class Code for the GMCH Device 1.

Bit	Description
7:0	**Sub-Class Code (SUBC).** This is an 8-bit value that indicates the category of Bridge into which the Device 1 of the GMCH falls. 04h = PCI-to-PCI bridge.

3.5.2.7 BCC1—Base Class Code Register (Device 1)

Address Offset: 0Bh
Default Value: 06h
Access: RO
Size: 8 bits

This register contains the Base Class Code of the GMCH Device 1.

Bit	Description
7:0	**Base Class Code (BASEC).** This is an 8-bit value that indicates the Base Class Code for the GMCH Device 1. 06h = Bridge device.

3.5.2.8 MLT1—Master Latency Timer Register (Device 1)

Address Offset: 0Dh
Default Value: 00h
Access: RO, R/W
Size: 8 bits

This functionality is not applicable. It is described here since these bits should be implemented as a read/write to prevent standard PCI-to-PCI bridge configuration software from getting "confused."

Bit	Description
7:3	**Scratchpad MLT (NA7.3).** These bits return the value with which they are written; however, they have no internal function and are implemented as a scratchpad merely to avoid confusing software.
2:0	Reserved.

3.5.2.9 HDR1—Header Type Register (Device 1)

Address Offset: 0Eh
Default Value: 01h
Access: RO
Size: 8 bits

This register identifies the header layout of the configuration space. No physical register exists at this location.

Bit	Description
7:0	**Header Type Register (HDR).** This read only field always returns 01 to indicate that GMCH Device 1 is a single function device with bridge header layout.

3.5.2.10 PBUSN1—Primary Bus Number Register (Device 1)

Address Offset: 18h
Default Value: 00h
Access: RO
Size: 8 bits

This register identifies that "virtual" PCI-to-PCI bridge is connected to bus #0.

Bit	Description
7:0	**Primary Bus Number (BUSN).** Configuration software typically programs this field with the number of the bus on the primary side of the bridge. Since Device 1 is an internal device and its primary bus is always 0, these bits are read only and are hardwired to 0.

3.5.2.11 SBUSN1—Secondary Bus Number Register (Device 1)

Address Offset: 19h
Default Value: 00h
Access: R/W
Size: 8 bits

This register identifies the bus number assigned to the second bus side of the "virtual" PCI-to-PCI bridge (i.e., to PCI_B/AGP). This number is programmed by the PCI configuration software to allow mapping of configuration cycles to PCI_B/AGP.

Bit	Description
7:0	**Secondary Bus Number (BUSN).** This field is programmed by configuration software with the bus number assigned to PCI_B.

3.5.2.12 SUBUSN1—Subordinate Bus Number Register (Device 1)

Address Offset: 1Ah
Default Value: 00h
Access: R/W
Size: 8 bits

This register identifies the subordinate bus (if any) that resides at the level below PCI_B/AGP. This number is programmed by the PCI configuration software to allow mapping of configuration cycles to PCI_B/AGP.

Bit	Description
7:0	**Subordinate Bus Number (BUSN).** This register is programmed by configuration software with the number of the highest subordinate bus that lies behind the Device 1 bridge. When only a single PCI device resides on the AGP/PCI_B segment, this register will contain the same value as the SBUSN1 register.

3.5.2.13 SMLT1—Secondary Bus Master Latency Timer Register (Device 1)

Address Offset: 1Bh
Default Value: 00h
Access: RO, R/W
Size: 8 bits

This register control the bus tenure of the GMCH on AGP/PCI the same way Device 0 MLT controls the access to the PCI_A bus.

Bit	Description
7:3	**Secondary MLT Counter Value (MLT).** Programmable, default = 0 (SMLT disabled)
2:0	Reserved.

3.5.2.14 IOBASE1—I/O Base Address Register (Device 1)

Address Offset: 1Ch
Default Value: F0h
Access: RO, R/W
Size: 8 bits

This register controls the processor to PCI_B/AGP I/O access routing based on the following formula:

IO_BASE ≤ address ≤ IO_LIMIT

Only the upper 4 bits are programmable. For the purpose of address decode, address bits A[11:0] are treated as 0. Thus, the bottom of the defined I/O address range will be aligned to a 4-KB boundary.

Bit	Description
7:4	**I/O Address Base (IOBASE).** Corresponds to A[15:12] of the I/O addresses passed by bridge 1 to AGP/PCI_B.
3:0	Reserved.

3.5.2.15 IOLIMIT1—I/O Limit Address Register (Device 1)

Address Offset: 1Dh
Default Value: 00h
Access: RO, R/W
Size: 8 bits

This register controls the processor to PCI_B/AGP I/O access routing based on the following formula:

IO_BASE ≤ address ≤ IO_LIMIT

Only the upper four bits are programmable. For the purpose of address decode, address bits A[11:0] are assumed to be FFFh. Thus, the top of the defined I/O address range will be at the top of a 4-KB aligned address block.

Bit	Description
7:4	**I/O Address Limit (IOLIMIT).** This field corresponds to A[15:12] of the I/O address limit of Device 1. Devices between this upper limit and IOBASE1 will be passed to AGP/PCI_B.
3:0	Reserved.

3.5.2.16 SSTS1—Secondary Status Register (Device 1)

Address Offset: 1Eh
Default Value: 02A0h
Access: RO, R/WC
Size: 16 bits

SSTS1 is a 16-bit status register that reports the occurrence of error conditions associated with secondary side (i.e., PCI_B/AGP side) of the "virtual" PCI-to-PCI bridge embedded within the GMCH.

Bit	Description
15	**Detected Parity Error (DPE)—R/WC.** 0 = Software sets DPE1 to 0 by writing a 1 to this bit. 1 = Indicates GMCH's detection of a parity error in the address or data phase of PCI_B/AGP bus transactions.
14	**Received System Error (RSE)—RO.** Hardwired to 0. GMCH does not have an SERR# signal pin on the AGP interface.
13	**Received Master Abort Status (RMAS)—R/WC.** 0 = Software resets this bit to 0 by writing a 1 to it. 1 = GMCH terminated a Host-to-PCI_B/AGP with an unexpected master abort.
12	**Received Target Abort Status (RTAS)—R/WC.** 0 = Software resets RTAS1 to 0 by writing a 1 to it. 1 = GMCH-initiated transaction on PCI_B/AGP is terminated with a target abort.
11	**Signaled Target Abort Status (STAS)—RO.** Hardwired to a 0. GMCH does not generate target abort on PCI_B/AGP.
10:9	**DEVSEL# Timing (DEVT)—RO.** Hardwired to a 00. This field indicates the timing of the DEVSEL# signal when the GMCH responds as a target on PCI_B/AGP. It is hardwired to 01b (medium) to indicate the time when a valid DEVSEL# can be sampled by the initiator of the PCI cycle.
8	**Master Data Parity Error Detected (DPD)—RO.** Hardwired to 0. GMCH does not implement G_PERR# signal on PCI_B.
7	**Fast Back-to-Back (FB2B)—RO.** Hardwired to 1. GMCH, as a target, supports fast back-to-back transactions on PCI_B/AGP.
6	Reserved.
5	**66/60 MHz Capability (CAP66)—RO.** Hardwired to 1. Indicates that the AGP/PCI_B bus is capable of 66 MHz operation.
4:0	Reserved.

3.5.2.17 MBASE1—Memory Base Address Register (Device 1)

Address Offset: 20–21h
Default Value: FFF0h
Access: R/W
Size: 16 bits

This register controls the processor to PCI_B non-prefetchable memory access routing based on the following formula:

MEMORY_BASE ≤ address ≤ MEMORY_LIMIT

The upper 12 bits of the register are read/write and correspond to the upper 12 address bits A[31:20] of the 32-bit address. The bottom four bits of this register are read only and return zeros when read. This register must be initialized by the configuration software. For the purpose of address decode, address bits A[19:0] are assumed to be 0. Thus, the bottom of the defined memory address range will be aligned to a 1-MB boundary.

Bit	Description
15:4	**Memory Address Base (MBASE).** This field corresponds to A[31:20] of the lower limit of the memory range that will be passed by the Device 1 bridge to AGP/PCI_B.
3:0	Reserved.

3.5.2.18 MLIMIT1—Memory Limit Address Register (Device 1)

Address Offset: 22–23h
Default Value: 0000h
Access: RO, R/W
Size: 16 bits

This register controls the CPU to PCI_B non-prefetchable memory access routing based on the following formula:

MEMORY_BASE ≤ address ≤ MEMORY_LIMIT

The upper 12 bits of the register are read/write and correspond to the upper 12 address bits A[31:20] of the 32-bit address. The bottom four bits of this register are read-only and return zeros when read. This register must be initialized by the configuration software. For the purpose of address decode, address bits A[19:0] are assumed to be FFFFFh. Thus, the top of the defined memory address range will be at the top of a 1-MB aligned memory block.

Note: Memory range covered by MBASE and MLIMIT registers are used to map non-prefetchable PCI_B/AGP address ranges (typically, where control/status memory-mapped I/O data structures of the graphics controller will reside) and PMBASE and PMLIMIT are used to map prefetchable address ranges (typically graphics local memory). This segregation allows application of USWC space attribute to be performed in a true plug-and-play manner to the prefetchable address range for improved processor-AGP memory access performance.

Note: Configuration software is responsible for programming all address range registers (prefetchable, non-prefetchable) with the values that provide exclusive address ranges (i.e., prevent overlap with each other and/or with the ranges covered with the main memory). There is no provision in the GMCH hardware to enforce prevention of overlap and operations of the system in the case of overlap are not guaranteed.

Bit	Description
15:4	**Memory Address Limit (MLIMIT).** Corresponds to A[31:20] of the memory address that corresponds to the upper limit of the range of memory accesses that will be passed by the Device 1 bridge to AGP/PCI_B.
3:0	Reserved.

3.5.2.19 PMBASE1—Prefetchable Memory Base Address Register (Device 1)

Address Offset: 24–25h
Default Value: FFF0h
Access: R/W
Size: 16 bits

This register controls the processor to PCI_B prefetchable memory accesses routing based on the following formula:

PREFETCHABLE_MEMORY_BASE ≤ address ≤ PREFETCHABLE_MEMORY_LIMIT

The upper 12 bits of the register are read/write and correspond to the upper 12 address bits A[31:20] of the 32-bit address. The bottom four bits of this register are read only and return zeros when read. This register must be initialized by the configuration software. For the purpose of address decode, address bits A[19:0] are assumed to be 0. Thus, the bottom of the defined memory address range will be aligned to a 1-MB boundary.

Bit	Description
15:4	**Prefetchable Memory Address Base (PMBASE).** This field corresponds to A[31:20] of the lower limit of the address range passed by bridge Device 1 across AGP/PCI_B.
3:0	Reserved.

3.5.2.20 PMLIMIT1—Prefetchable Memory Limit Address Register (Device 1)

Address Offset: 26–27h
Default Value: 0000h
Access: RO, R/W
Size: 16 bits

This register controls the processor to PCI_B prefetchable memory accesses routing based on the following formula:

PREFETCHABLE_MEMORY_BASE ≤ address ≤ PREFETCHABLE_MEMORY_LIMIT

The upper 12 bits of the register are read/write and correspond to the upper 12 address bits A[31:20] of the 32-bit address. The bottom four bits of this register are read-only and return zeroes when read. This register must be initialized by the configuration software. For the purpose of address decode, address bits A[19:0] are assumed to be FFFFFh. Thus, the top of the defined memory address range will be at the top of a 1-MB aligned memory block. Note that prefetchable memory range is supported to allow segregation by the configuration software between the memory ranges that must be defined as UC and the ones that can be designated as a USWC (i.e. prefetchable) from the processor perspective.

Bit	Description
15:4	**Prefetchable Memory Address Limit (PMLIMIT).** This field corresponds to A[31:20] of the upper limit of the address range passed by bridge Device 1 across AGP/PCI_B.
3:0	Reserved.

3.5.2.21 BCTRL1—Bridge Control Register (Device 1)

Address Offset: 3Eh
Default Value: 00h
Access: RO, R/W
Size: 8 bits

This register provides extensions to the PCICMD1 register that are specific to PCI-to-PCI bridges. The BCTRL1 provides additional control for the secondary interface (i.e., PCI_B/AGP) as well as some bits that affect the overall behavior of the "virtual" PCI-to-PCI bridge embedded within the GMCH (e.g., VGA compatible address ranges mapping).

Bit	Description
7	**Fast Back-to-Back Enable (FB2BEN)—RO.** Hardwired to 0. The GMCH does not generate fast back-to-back cycles as a master on AGP.
6	**Secondary Bus Reset (SRESET)—RO.** Hardwired to 0. GMCH does not support generation of reset via this bit on the AGP.
5	**Master Abort Mode (MAMODE)—RO.** Hardwired to 0. This means when acting as a master on AGP/PCI_B the GMCH will drop writes on the floor and return all ones during reads when a Master Abort occurs.
4	Reserved.
3	**VGA Enable (VGAEN)—R/W.** This bit controls the routing of processor-initiated transactions targeting VGA compatible I/O and memory address ranges. 0 = Disable. 1 = Enable.
2	**ISA Enable (ISAEN)—R/W.** This bit modifies the response by the GMCH to an I/O access issued by the processor that targets ISA I/O addresses. This applies only to I/O addresses that are enabled by the IOBASE and IOLIMIT registers. 0 = Disable (default). All addresses defined by the IOBASE and IOLIMIT for processor I/O transactions are mapped to PCI_B/AGP. 1 = Enable. GMCH does Not forward to PCI_B/AGP any I/O transactions addressing the last 768 bytes in each 1 KB block, even if the addresses are within the range defined by the IOBASE and IOLIMIT registers. Instead of going to PCI_B/AGP these cycles will be forwarded to the hub interface where they can be subtractively or positively claimed by the ISA bridge.
1	**SERR Enable (SERREN)—RO.** Hardwired to 0. This bit normally controls forwarding SERR# on the secondary interface to the primary interface. The GMCH does not support the SERR# signal on the AGP/PCI_B bus.
0	**Parity Error Response Enable (PEREN)—R/W.** This bit controls GMCH's response to data phase parity errors on PCI_B/AGP. G_PERR# is not implemented by the GMCH. 0 = Disable. Address and data parity errors on PCI_B/AGP are not reported via the GMCH HI SERR messaging mechanism. Other types of error conditions can still be signaled via SERR messaging independent of this bit's state. 1 = Enable. Address and data parity errors detected on PCI_B are reported via the HI SERR messaging mechanism, if further enabled by SERRE1.

The bit field definitions for VGAEN and MDAP are detailed in Table 3-4.

Table 3-4. VGAEN and MDAP Bit Definitions

VGAEN	MDAP	Description
0	0	All References to MDA and VGA space are routed to hub interface.
0	1	Illegal combination
1	0	All VGA references are routed to this bus. MDA references are routed to the hub interface.
1	1	All VGA references are routed to this bus. MDA references are routed to hub interface.

3.5.2.22 ERRCMD1—Error Command Register (Device 1)

Address Offset: 40h
Default Value: 00h
Access: R/W
Size: 8 bits

Bit	Description
7:1	Reserved.
0	**SERR on Receiving Target Abort (SERTA).** SERR messaging for Device 1 is globally enabled in the PCICMD1 register. 0 = Disable. The GMCH does not assert an SERR message upon receipt of a target abort on PCI_B. 1 = Enable. The GMCH generates an SERR message over the hub interface upon receiving a target abort on PCI_B.

3.5.3 Integrated Graphics Device Registers (Device 2)

The Integrated Graphics Device registers are in Device 2. This section contains the PCI configuration registers listed in order of ascending offset address. Table 3-5 provides the register address map for this device.

Table 3-5. Integrated Graphics Device Register Address Map (Device2)

Address Offset	Symbol	Register Name	Default Value	Access
00–01h	VID2	Vendor Identification	8086h	RO
02–03h	DID2	Device Identification	2562h	RO
04–05h	PCICMD2	PCI Command	0000h	RO, R/W
06–07h	PCISTS2	PCI Status	0090h	RO, R/WC
08h	RID2	Revision Identification	see register description	RO
09–0Bh	CC	Class Code	030000h	RO
0Ch	CLS	Cache Line Size	00h	RO
0Dh	MLT2	Master Latency Timer	00h	RO
0Eh	HDR2	Header Type	00h	RO
0Fh	—	Intel Reserved	—	—
10–13h	GMADR	Graphics Memory Range Address	00000008h	R/W, RO
14–17h	MMADR	Memory Mapped Range Address	00000000h	R/W, RO
18–2Bh	—	Intel Reserved	—	—
2C–2Dh	SVID2	Subsystem Vendor ID	0000h	R/WO
2E–2Fh	SID2	Subsystem ID	0000h	R/ WO
30–33h	ROMADR	Video Bids ROM Base Address	00000000h	R/W, RO
34h	CAPPOINT	Capabilities Pointer	D0h	RO
35–3Bh	—	Intel Reserved	—	—
3Ch	INTRLINE	Interrupt Line	00h	R/W
3Dh	INTRPIN	Interrupt Pin	01h	RO
3Eh	MINGNT	Minimum Grant	00h	RO
3Fh	MAXLAT	Maximum Latency	00h	RO
40–CFh	—	Intel Reserved	—	—
D0–D1h	PMCAPID	Power Management Capabilities ID	0001h	RO
D2–D3h	PMCAP	Power Management Capabilities	0021h	RO
D4–D5h	PMCS	Power Management Control	0000h	R/W, RO
D6–FFh	—	Intel Reserved	—	—

3.5.3.1 VID2—Vendor Identification Register (Device 2)

Address Offset: 00h–01h
Default Value: 8086h
Access Attributes: Read Only
Size: 16 bits

The VID Register contains the vendor identification number. This 16-bit register combined with the Device Identification Register uniquely identify any PCI device. Writes to this register have no effect.

Bit	Description
15:0	**Vendor Identification Number.** This is a 16-bit value assigned to Intel = 8086.

3.5.3.2 DID2—Device Identification Register (Device 2)

Address Offset: 02h–03h
Default Value: 2562h
Access Attributes: RO
Size: 16 bits

This 16-bit register combined with the Vendor Identification register uniquely identifies any PCI device.

Bit	Description
15:0	**Device Identification Number.** This is a 16-bit value assigned to the GMCH IGD = 2562h.

3.5.3.3 PCICMD2—PCI Command Register (Device 2)

Address Offset: 04h–05h
Default: 0000h
Access: RO, R/W
Size: 16 bits

This 16-bit register provides basic control over the IGD's ability to respond to PCI cycles. The PCICMD Register in the IGD disables the IGD PCI compliant master accesses to main memory.

Bit	Description
15:10	Reserved.
9	**Fast Back-to-Back (FB2B)—RO.** Hardwired to 0. Not Implemented.
8	**SERR# Enable (SERRE)—RO.** Hardwired to 0. Not Implemented.
7	**Address/Data Stepping—RO.** Hardwired to 0. Not Implemented.
6	**Parity Error Enable (PERRE)—RO.** Hardwired to 0. Not Implemented. Since the IGD belongs to the category of devices that does not corrupt programs or data in system memory or hard drives, the IGD ignores any parity error that it detects and continues with normal operation.
5	**Video Palette Snooping (VPS)—RO.** This bit is hardwired to 0 to disable snooping.
4	**Memory Write and Invalidate Enable (MWIE)—RO.** Hardwired to 0. The IGD does not support memory write and invalidate commands.
3	**Special Cycle Enable (SCE)—RO.** Hardwired to 0. The IGD ignores Special cycles.
2	**Bus Master Enable (BME)—R/W.** 0 = Disable IGD bus mastering (default). 1 = Enable the IGD to function as a PCI compliant master.
1	**Memory Access Enable (MAE)—R/W.** This bit controls the IGD's response to memory space accesses. 0 = Disable (default). 1 = Enable.
0	**I/O Access Enable (IOAE)—R/W.** This bit controls the IGD's response to I/O space accesses. 0 = Disable (default). 1 = Enable.

3.5.3.4 PCISTS2—PCI Status Register (Device 2)

Address Offset: 06h–07h
Default Value: 0090h
Access: RO, R/WC
Size: 16 bits

PCISTS is a 16-bit status register that reports the occurrence of a PCI compliant master abort and PCI compliant target abort.

Bit	Description
15	**Detected Parity Error (DPE)—RO.** Hardwired to 0. IGD does not detect parity.
14	**Signaled System Error (SSE)—RO.** Hardwired to 0. The IGD never asserts SERR#
13	**Received Master Abort Status (RMAS)—RO.** Hardwired to 0. The IGD never gets a Master Abort.
12	**Received Target Abort Status (RTAS)—RO.** Hardwired to 0. The IGD never gets a Target Abort.
11	**Signaled Target Abort Status (STAS)—RO.** Hardwired to 0. The IGD does not use target abort semantics.
10:9	**DEVSEL# Timing (DEVT)—RO.** Hardwired to 00. Not applicable.
8	**Data Parity Detected (DPD)—R/WC.** Hardwired to 0. Device 2 does not detect Parity Error Responses (the IGD does not do parity detection).
7	**Fast Back-to-Back (FB2B)—RO.** Hardwired to 1. The IGD accepts fast back-to-back when the transactions are not to the same agent.
6	**User Defined Format (UDF)—RO.** Hardwired to 0.
5	**66 MHz PCI Capable (66C)—RO.** Hardwired to 0. Not applicable.
4	**CAP LIST— RO.** Hardwired to 1. This indicates that the register at 34h provides an offset into the function's PCI Configuration Space containing a pointer to the location of the first item in the list.
3:0	Reserved.

3.5.3.5 RID2—Revision Identification Register (Device 2)

Address Offset: 08h
Default Value: See table below
Access: RO
Size: 8 bits

This register contains the revision number of the IGD.

Bit	Description
7:0	**Revision Identification Number.** This is an 8-bit value that indicates the revision identification number for the IGD. **82845G and 82845GL GMCH** 01h = A1 Stepping 03h = B1 Stepping **82845GV GMCH** 01h = A1 Stepping

3.5.3.6 CC—Class Code Register (Device 2)

Address Offset: 09h–0Bh
Default Value: 030000h
Access: RO
Size: 24 bits

This register contains the device programming interface information related to the Sub-Class Code and Base Class Code definition for the IGD. This register also contains the Base Class Code and the function sub-class in relation to the Base Class Code.

Bit	Description
23:16	**Base Class Code (BASEC).** 03=Display controller
15:8	**Sub-Class Code (SCC).** Function 0: 00h=VGA compatible or 80h=Non VGA; based on Device 0 GC bit 1. Function 1: 80h=Non VGA;
7:0	**Programming Interface (PI).** 00h=Hardwired as a Display controller.

3.5.3.7 CLS—Cache Line Size Register (Device 2)

Address Offset: 0Ch
Default Value: 00h
Access: RO
Size: 8 bits

The IGD does not support this register as a PCI slave.

Bit	Description
7:0	**Cache Line Size (CLS).** This field is hardwired to zeros. The IGD, as a PCI compliant master, does not use the Memory Write and Invalidate command and, in general, does not perform operations based on cache line size.

3.5.3.8 MLT2—Master Latency Timer Register (Device 2)

Address Offset: 0Dh
Default Value: 00h
Access: RO
Size: 8 bits

The IGD does not support the programmability of the master latency timer because it does not perform bursts.

Bit	Description
7:0	**Master Latency Timer Count Value.** Hardwired to zeros.

3.5.3.9 HDR2—Header Type Register (Device 2)

Address Offset: 0Eh
Default Value: 00h
Access: RO
Size: 8 bits

This register contains the Header Type of the IGD.

Bit	Description
7:0	**Header Code (H).** This is an 8-bit value that indicates the Header Code for the IGD. 00h = Single function device with a type 0 configuration space format.

3.5.3.10 GMADR —Graphics Memory Range Address Register (Device 2)

Address Offset: 10–13h
Default Value: 00000008h
Access: R/W, RO
Size: 32 bits

This register requests allocation for the IGD graphics memory. The allocation is for either 64 MB or 128 MB and the base address is defined by bits [31:27,26].

Bit	Description
31:27	**Memory Base Address—R/W.** Set by the operating system. These bits correspond to address signals [31:26].
26	**128MB Address Mask—RO, R/W.** The operation of this bit is controlled via Device 0 register GCCR. If the signal is low this bit is Read Only with a value of 0, indicating a memory range of 128 MB. If the signal is high, this bit becomes R/W, indicating a memory range of 64 MB (where system software will program the bit to the appropriate address bit value).
25:4	**Address Mask—RO.** Hardwired to zeros to indicate (at least) a 32-MB address range.
3	**Prefetchable Memory—RO.** Hardwired to 1 to enable prefetching.
2:1	**Memory Type—RO.** Hardwired to 0 to indicate 32-bit address.
0	**Memory/IO Space—RO.** Hardwired to 0 to indicate memory space.

3.5.3.11 MMADR—Memory Mapped Range Address Register (Device 2)

Address Offset: 14– 17h
Default Value: 00000000h
Access: R/W, RO
Size: 32 bits

This register requests allocation for the IGD registers and instruction ports. The allocation is for 512 KB and the base address is defined by bits [31:19].

Bit	Description
31:19	**Memory Base Address— R/W.** Set by the operating system. These bits correspond to address signals [31:19].
18:4	**Address Mask— RO.** Hardwired to zeros to indicate 512-KB address range.
3	**Prefetchable Memory— RO.** Hardwired to 0 to prevent prefetching.
2:1	**Memory Type— RO.** Hardwired to zeros to indicate 32-bit address.
0	**Memory / IO Space— RO.** Hardwired to 0 to indicate memory space.

3.5.3.12 SVID2—Subsystem Vendor Identification Register (Device 2)

Address Offset: 2C– 2Dh
Default Value: 0000h
Access: R/WO
Size: 16 bits

Bit	Description
15:0	**Subsystem Vendor ID.** This value is used to identify the vendor of the subsystem. This register should be programmed by BIOS during boot-up. Once written, this register becomes read only. This register can only be cleared by a Reset.

3.5.3.13 SID2—Subsystem Identification Register (Device 2)

Address Offset: 2E– 2Fh
Default Value: 0000h
Access: R/WO
Size: 16 bits

Bit	Description
15:0	**Subsystem Identification.** This value is used to identify a particular subsystem. This field should be programmed by BIOS during boot-up. Once written, this register becomes read only. This register can only be cleared by a Reset.

3.5.3.14 ROMADR—Video BIOS ROM Base Address Registers (Device 2)

Address Offset: 30–33h
Default Value: 00000000h
Access: R/W, RO
Size: 32 bits

The IGD does not use a separate BIOS ROM; therefore, this register is hardwired to zeros.

Bit	Description
31:18	**ROM Base Address—RO.** Hardwired to zeros.
17:11	**Address Mask—RO.** Hardwired to zeros to indicate 256-KB address range.
10:1	Reserved. Hardwired to zeros.
0	**ROM BIOS Enable—RO.** Hardwired to 0 to indicate that the ROM is not accessible.

3.5.3.15 CAPPOINT—Capabilities Pointer Register (Device 2)

Address Offset: 34h
Default Value: D0h
Access: RO
Size: 8 bits

Bit	Description
7:0	**Capabilities Pointer Value.** This field contains an offset into the function's PCI Configuration Space for the first item in the New Capabilities Linked List, the ACPI registers at address D0h.

3.5.3.16 INTRLINE—Interrupt Line Register (Device 2)

Address Offset: 3Ch
Default Value: 00h
Access: R/W
Size: 8 bits

Bit	Description
7:0	**Interrupt Connection.** This field is used to communicate interrupt line routing information. POST software writes the routing information into this register as it initializes and configures the system. The value in this register indicates which input of the system interrupt controller that the device's interrupt pin is connected to. This register is needed for Plug N Play software. Settings of this register field has no effect on GMCH operation as there is no hardware functionality associated with this register, other than the hardware implementation of the R/W register itself.

3.5.3.17 INTRPIN—Interrupt Pin Register (Device 2)

Address Offset: 3Dh
Default Value: 01h
Access: RO
Size: 8 bits

Bit	Description
7:0	**Interrupt Pin.** As a single function device, the IGD specifies INTA# as its interrupt pin. 01h=INTA#.

3.5.3.18 MINGNT—Minimum Grant Register (Device 2)

Address Offset: 3Eh
Default Value: 00h
Access: RO
Size: 8 bits

Bit	Description
7:0	**Minimum Grant Value.** The IGD does not burst as a PCI compliant master. Bits[7:0]=00h.

3.5.3.19 MAXLAT—Maximum Latency Register (Device 2)

Address Offset: 3Fh
Default Value: 00h
Access: RO
Size: 8 bits

Bit	Description
7:0	**Maximum Latency Value.** Bits[7:0]=00h. The IGD has no specific requirements for how often it needs to access the PCI bus.

3.5.3.20 PMCAPID—Power Management Capabilities ID Register (Device 2)

Address Offset: D0h–D1h
Default Value: 0001h
Access: RO
Size: 16 bits

Bit	Description
15:8	**NEXT_PTR.** This contains a pointer to next item in capabilities list. This is the final capability in the list and must be set to 00h.
7:0	**CAP_ID.** SIG defines this ID is 01h for power management.

3.5.3.21 PMCAP—Power Management Capabilities Register (Device 2)

Address Offset: D2h–D3h
Default Value: 0021h
Access: RO
Size: 16 bits

Bit	Description
15:11	**PME Support.** Hardwired to 0. This field indicates the power states in which the IGD may assert PME#. The IGD does not assert the PME# signal.
10	**D2.** Hardwired to 0. The D2 power management state is not supported.
9	**D1.** Hardwired to 0. The D1 power management state is not supported.
8:6	Reserved. Read as zeros.
5	**Device Specific Initialization (DSI).** Hardwired to 1 to indicate that special initialization of the IGD is required before generic class device driver is to use it.
4	**Auxiliary Power Source.** Hardwired to 0.
3	**PME Clock.** Hardwired to 0. The IGD does not support PME# generation.
2:0	**Version.** Hardwired to 001b to indicate there are 4 bytes of power management registers implemented.

3.5.3.22 PMCS—Power Management Control/Status Register (Device 2)

Address Offset: D4h–D5h
Default Value: 0000h
Access: R/W, RO
Size: 16 bits

Bit	Description
15	**PME_Status—RO.** Hardwired to 0. The IGD does not support PME# generation from D3 (cold).
14:13	**Data Scale (Reserved)—RO.** Hardwired to 0. The IGD does not support data register.
12:9	**Data_Select (Reserved)—RO.** Hardwired to 0. The IGD does not support data register.
8	**PME_En—RO.** Hardwired to 0. PME# assertion from D3 (cold) is disabled.
7:2	Reserved. Always returns 0 when read, write operations have no effect.
1:0	**PowerState—R/W.** This field indicates the current power state of the IGD and can be used to set the IGD into a new power state. If software attempts to write an unsupported state to this field, the write operation must complete normally on the bus, but the data is discarded and no state change occurs. 00 = D0 (Default) 01 = D1 Not Supported– Writes will be blocked and will return the previous value. 10 = D2 Not Supported– Writes will be blocked and will return the previous value. 11 = D3

3.5.4 Device 6 Registers

Device 6 registers are Intel Reserved, except for the following two registers.

3.5.4.1 DWTC—DRAM Write Throttling Control Register (Device 6)

Address Offset	D0–D7h
Default Value	0000000000000000h
Access	R/W, L
Size:	64 bits

Bits	Description
63:41	Intel Reserved.
40:28	**Global Write Hexword Threshold (GWHT).** The thirteen-bit value held in this field is multiplied by 2^{15} to arrive at the number of hexwords that must be written within the Global DRAM Write Sampling Window to cause the throttling mechanism to be invoked.
27:22	**Write Throttle Time (WTT).** This value provides a multiplier between 0 and 63 which specifies how long throttling remains in effect as a number of Global DRAM Write Sampling Windows. For example, if GDWSW is programmed to 1000_0000b and WTT is set to 01_0000b, then throttling will be performed for $8192*10^5$ host clocks (at 100 MHz) seconds once invoked ($128 * 4*10^5$ host clocks * 16).
21:15	**Write Throttle Monitoring Window (WTMW).** The value in this register is padded with 4 0's to specify a window of 0-2047 host clocks with 16 clock Granularity. While the throttling mechanism is invoked, DRAM writes are monitored during this window. If the number of hexwords written during the window reaches the Write Throttle Hexword Maximum, then write requests are blocked for the remainder of the window.
14:3	**Write Throttle Hexword Maximum (WTHM).** The Write Throttle Hexword Maximum defines the maximum number of hexwords between 0-4095 which are permitted to be written to DRAM within one Write Throttle Monitoring Window.
2:1	**Write Throttle Mode ((WTMode).** 00 = Throttling via Counters and Hardware throttle_on signal mechanisms disabled. 01 = Reserved 10 = Counter mechanism controlled through GDWSW and GWHT is enabled. When the threshold set in GDWSW and GWHT is reached, throttling start/stop cycles occur based on the settings in WTT, WTMWand WTHM. 11 = Reserved
0	**START Write Throttle (SWT).** Software writes to this bit to start and stop write throttling. 0 = Write throttling stops and the counters associated with WTMW and WTHM are reset. 1 = Write throttling begins based on the settings in WTMW and WTHM, and remains in effect until this bit is reset to 0.

3.5.4.2 DRTC—DRAM Read Throttling Control Register (Device 6)

Address Offset D8h
Default Value 0000000000000000h
Access R/W, L
Size: 64 bits

Bits	Description
63:41	**Intel Reserved.**
40:28	**Global Read Hexword Threshold (GRHT).** The thirteen-bit value held in this field is multiplied by 2^{15} to arrive at the number of hexwords that must be read within the Global DRAM Read Sampling Window in order to cause the throttling mechanism to be invoked.
27:22	**Read Throttle Time (RTT).** This value provides a multiplier between 0 and 63 which specifies how long Counter based read throttling remains in effect as a number of Global DRAM Read Sampling Windows. For example, if GDRSW is programmed to 1000_0000b and RTT is set to 01_0000b, then read throttling will be performed for $8192*10^5$ host clocks (at 100 MHz) seconds once invoked ($128 * 4*10^5$ host clocks * 16).
21:15	**Read Throttle Monitoring Window (RTMW).** The value in this register is padded with 4 zeros to specify a window of 0–2047 host clocks with 16 clock granularity. While the throttling mechanism is invoked, DRAM reads are monitored during this window. If the number of hexwords read during the window reaches the Read Throttle Hexword Maximum, read requests are blocked for the remainder of the window.
14:3	**Read Throttle Hexword Maximum (RTHM).** The Read Throttle Hexword Maximum defines the maximum number of hexwords between 0–4095 which are permitted to be read from DRAM within one Read Throttle Monitoring Window.
2:1	**Read Throttle Mode (RTMode).** 00 = Throttling via Counters and Hardware throttle_on signal mechanisms Disabled. 01 = Reserved 10 = Counter mechanism controlled through GDRSW and GRHT is enabled. When the threshold set in GDRSW and GRHT is reached, throttling start/stop cycles occur based on the settings in RTT, RTMW, and RTHM. 11 = Reserved
0	**START Read Throttle (SRT).** Software writes to this bit to start and stop read throttling. 0 = Read throttling stops and the counters associated with RTMW and RTHM are reset. 1 = Read throttling begins based on the settings in RTMW and RTHM, and remains in effect until this bit is reset to 0.

This page is intentionally left blank.

Functional Description 4

This chapter describes the GMCH interfaces and functional units including the processor system bus interface, the AGP interface, system memory controller, integrated graphics device, DVO interfaces, display interfaces, power management, and clocking.

4.1 Processor System Bus

The GMCH supports a single mPGA 478 processor with PSB frequencies of 400 MHz (100 MHz HCLK) / 533 MHz (133 MHz HCLK) and it also supports Hyper-Threading Technology. The GMCH uses a scalable PSB VTT between 1.15 V and 1.75 V and on-die termination. The GMCH supports 32-bit host addressing (decoding up to 4 GB of the processor's memory address space). Host-initiated I/O cycles are decoded to the AGP/PCI_B, hub interface or GMCH configuration space. Host-initiated memory cycles are decoded to AGP/PCI_B, the hub interface, or system memory. All memory accesses from the host interface that hit the graphics aperture are translated using an AGP address translation table. AGP/PCI_B device accesses to non-cacheable system memory are not snooped on the host bus. Memory accesses initiated from AGP/PCI_B using PCI semantics and from the hub interface to system memory are snooped on the host bus.

The GMCH supports the Pentium 4 processor subset of the Enhanced Mode Scaleable Bus. The cache line size is 64 bytes. Source synchronous transfer is used for the address and data signals. At 100/133 MHz bus clock the address signals are double pumped to run at 200/266 MHz and a new address can be generated every other bus clock. At 100/133 MHz bus clock the data signals are quad pumped to run at 400/533 MHz and an entire 64-B cache line can be transferred in two bus clocks.

The GMCH integrates AGTL+ termination resistors on die. The GMCH has an IOQ depth of 8. The GMCH supports one outstanding Deferred transaction on the PSB.

4.1.1 PSB Dynamic Bus Inversion

The GMCH supports Dynamic Bus Inversion (DBI) when driving, and when receiving data from the system bus. DBI limits the number of data signals that are driven to a low voltage on each quad pumped data phase. This decreases the power consumption of the GMCH. DINV_[3:0]# indicate if the corresponding 16 bits of data are inverted on the bus for each quad pumped data phase (see Table 4-1).

Table 4-1. DINV Signals vs. Data Bytes

DINV[3:0]#	Data Bits
DINV_0#	HD_[15:0]#
DINV_1#	HD_[31:16]#
DINV_2#	HD_[47:32]#
DINV_3#	HD_[63:48]#

When the processor or the GMCH drives data, each 16-bit segment is analyzed. If more than 8 of the 16 signals would normally be driven low on the bus, the corresponding DINV# signal is asserted and the data is inverted prior to being driven on the bus. When the processor or the GMCH receives data, it monitors DINV[3:0]# to determine if the corresponding data segment should be inverted.

4.1.2 System Bus Interrupt Delivery

Pentium 4 processors support system bus interrupt delivery. They do not support the APIC serial bus interrupt delivery mechanism. Interrupt-related messages are encoded on the system bus as "Interrupt Message Transactions." In an 845G chipset, system bus interrupts can originate from the processor on the system bus, or from a downstream device on hub interface, or AGP. In the later case the GMCH drives the "Interrupt Message Transaction" on the system bus.

In an 845G chipset, the ICH4 contains IOxAPICs, and its interrupts are generated as upstream hub interface memory writes. Furthermore, *PCI Local Bus Specification, Revision 2.2* defines MSIs (Message Signaled Interrupts) that are also in the form of memory writes. A *PCI Local Bus Specification, Revision 2.2* device can generate an interrupt as an MSI cycle on it's PCI bus instead of asserting a hardware signal to the IOxAPIC. The MSI can be directed to the IOxAPIC, which in turn generates an interrupt as an upstream hub interface memory write. Alternatively, the MSI can be directed directly to the system bus. The target of an MSI is dependent on the address of the interrupt memory write. The GMCH forwards inbound hub interface and AGP (PCI semantic only) memory writes to address 0FEEx_xxxxh, to the system bus as "Interrupt Message Transactions."

4.1.3 Upstream Interrupt Messages

The GMCH accepts message based interrupts from AGP (PCI semantics only) or its hub interface, and forwards them to the system bus as Interrupt Message Transactions. The interrupt messages presented to the GMCH are in the form of memory writes to address 0FEEx_xxxxh. At the hub interface or AGP interface, the memory write interrupt message is treated like any other memory write; it is either posted into the inbound data buffer (if space is available) or retried (if data buffer space is not immediately available). Once posted, the memory write from AGP or the hub interface, to address 0FEEx_xxxxh, is decoded as a cycle that needs to be propagated by the GMCH to the system bus as an Interrupt Message Transaction.

4.2 System Memory Controller

The GMCH can be configured to support either SDR SDRAM or DDR SDRAM memory.

4.2.1 DDR SDRAM Interface Overview

The GMCH can support DDR266 and DDR200 in DDR mode with SSTL_2 signaling. The GMCH includes support for:

- Up to 2 GB of 266 MHz or 200 MHz DDR SDRAM
- DDR266 or DDR200 unbuffered 184-pin non-ECC DDR SDRAM DIMMs
- Maximum of two DIMMs, single-sided and/or double-sided
- Byte masking on writes through data masking

The bank address lines and the address lines allow the GMCH to support 64-bit wide DIMMs using 64-Mb, 128-Mb, 256-Mb, and 512-Mb SDRAM technology. The four chip select lines support up to four rows of double-sided SDRAM DIMMs. For write operations of less than a QWord, the GMCH performs a byte-wise write. The GMCH does not support ECC DIMMs, registered DIMMs, or double-sided x16 DIMMs.

4.2.2 SDR SDRAM Interface Overview

In addition to DDR SDRAM, the GMCH can support PC133 with LVTTL signaling. The GMCH integrates a main memory SDRAM controller with a 64-bit wide interface and 8 system memory clock signals, each at 133 MHz for SDR SDRAM. The GMCH supports the following:

- Up to 2 GB of 133 MHz SDR SDRAM.
- PC133 unbuffered 168-pin non-ECC SDR SDRAM DIMMs.
- Maximum of two DIMMs, single-sided and/or double-sided.
- Byte masking on writes through data masking

The bank address lines and the address lines allow the GMCH to support 64-bit wide DIMMs using 64-Mb, 128-Mb, 256-Mb, and 512-Mb SDRAM technology. The eight chip select lines support up to four rows of double-sided SDRAM DIMMs. For write operations of less than a QWord, the GMCH performs a byte-wise write. The GMCH does not support ECC DIMMs, registered DIMMs, mixed-mode (uneven) DS DIMMs, or PC100 DIMMs.

4.2.3 Memory Organization and Configuration

In the following discussion the term “row” refers to a set of memory devices that are simultaneously selected by a chip select signal. The GMCH supports a maximum of 4 rows of memory. For the purposes of this discussion, a “side” of a DIMM is equivalent to a “row” of SDRAM devices.

The memory bank address lines and the address lines allow the GMCH to support 64-bit wide x8 and x16 DIMMs using 64-Mb, 128-Mb, 256-Mb, and 512-Mb SDRAM technology.

For the DDR SDRAM interface, Table 4-2 lists the supported DDR DIMM configurations. Note that the GMCH supports configurations defined in the JEDEC DDR DIMM specification only (A,B,C). Non-JEDEC standard DIMMs (e.g., double-sided x16 DDR SDRAM DIMMs) are not supported. For more information on DIMM configurations, refer to the *JEDEC DDR DIMM specification*.

Table 4-2. Supported DDR DIMM Configurations

Density	64 Mbit		128 Mbit		256 Mbit		512 Mbit	
Device Width	X8	X16	X8	X16	X8	X16	X8	X16
Single / Double	SS/DS	SS/DS	SS/DS	SS/DS	SS/DS	SS/DS	SS/DS	SS/DS
184 pin DDR DIMMs	64 MB / 128 MB	32 MB / NA	128 MB / 256 MB	64 MB / NA	256 MB / 512 MB	128 MB / NA	512 MB / 1024 MB	256 MB/ NA

For the SDR SDRAM interface, Table 4-3 lists the supported SDR DIMM configurations.

Note: Mixed mode or uneven, double-sided SDR SDRAM DIMMs are not supported.

Table 4-3. Supported SDR DIMM Configurations

Density	64 Mbit		128 Mbit		256 Mbit		512 Mbit	
Device Width	X8	X16	X8	X16	X8	X16	X8	X16
Single / Double	SS/DS	SS/DS	SS/DS	SS/DS	SS/DS	SS/DS	SS/DS	SS/DS
168 pin SDR DIMMs	64 MB / 128 MB	32 MB / 64 MB	128 MB / 256 MB	64 MB / 128 MB	256 MB / 512 MB	128 MB / 256 MB	512 MB / 1024 MB	256 MB / 512 MB

4.2.3.1 Configuration Mechanism for DIMMs

Detection of the type of SDRAM installed on the DIMM is supported via Serial Presence Detect (SPD) mechanism as defined in the JEDEC DIMM specification. This uses the SCL, SDA, and SA[2:0] pins on the DIMMs to detect the type and size of the installed DIMMs. No special programmable modes are provided on the GMCH for detecting the size and type of memory installed. Type and size detection must be done via the serial presence detection pins and is required to configure the GMCH.

Memory Detection and Initialization

Before any cycles to the memory interface can be supported, the GMCH SDRAM registers must be initialized. The GMCH must be configured for operation with the installed memory types. Detection of memory type and size is done via the System Management Bus (SMB) interface on the ICH4. This two-wire bus is used to extract the SDRAM type and size information from the Serial Presence Detect port on the SDRAM DIMMs. SDRAM DIMMs contain a 5-pin Serial Presence Detect interface, including SCL (serial clock), SDA (serial data), and SA[2:0]. Devices on the SMBus bus have a 7-bit address. For the SDRAM DIMMs, the upper four bits are fixed at 1010. The lower three bits are strapped on the SA[2:0] pins. SCL and SDA are connected to the System Management Bus on the ICH4. Thus, data is read from the Serial Presence Detect port on the DIMMs via a series of I/O cycles to the ICH4. BIOS needs to determine the size and type of memory used for each of the rows of memory to properly configure the GMCH memory interface.

SMBus Configuration and Access of the Serial Presence Detect Ports

For more details, refer to the *Intel® 82801DB I/O Controller Hub 4 (ICH4) Datasheet*.

Memory Register Programming

This section provides an overview of how the required information for programming the SDRAM registers is obtained from the Serial Presence Detect ports on the DIMMs. The Serial Presence Detect ports are used to determine Refresh Rate, MA and MD Buffer Strength, Row Type (on a row by row basis), SDRAM Timings, Row Sizes, and Row Page Sizes. Table 4-4 lists a subset of the data available through the on board Serial Presence Detect ROM on each DIMM. Table 4-4 is only a subset of the defined SPD bytes on the DIMMs. These bytes collectively provide enough data for programming the GMCH SDRAM registers.

Table 4-4. Data Bytes on DIMM Used for Programming DRAM Registers

Byte	Function
2	Memory Type (SDR SDRAM or DDR SDRAM)
3	Number of Row Addresses, not counting Bank Addresses
4	Number of Column Addresses
5	Number of banks of SDRAM (single- or double-sided DIMM)
11	ECC, non-ECC (GMCH does not support ECC)
12	Refresh rate
17	Number of Banks on each device

4.2.4 Memory Address Translation and Decoding

The GMCH contains address decoders that translate the address received on the host bus or the hub interface. Decoding and translation of these addresses vary with the four SDRAM types. Also, the number of pages, page sizes, and densities supported vary with the type. The GMCH supports 64-Mb, 128-Mb, 256-Mb, and 512-Mb SDRAM devices. The multiplexed row/column address to the SDRAM memory array is provided by the memory bank select and memory address signals. These addresses are derived from the host address bus as defined by Table 4-5 for SDRAM devices.

Table 4-5. Address Translation and Decoding

Tech (Mbit)	Configuration	Row/Page Size (Mbyet)	R/C/B		Addr	BA1	BA0	A12	A11	A10	A9	A8	A7	A6	A5	A4	A3	A2	A1	A0
64	1 Meg x 16 x 4 bks	32	12 x 8 x 2	Row	24	11	12	**x**[26]	15	14	13	24	23	22	21	20	19	18	17	16
64	2 Meg x 8 x 4 bks	64	12 x 9 x 2	Row	25	13	12	**x**[26]	15	14	25	24	23	22	21	20	19	18	17	16
128	2 Meg x 16 x 4 bks	64	12 x 9 x 2	Row	25	13	12	**x**[26]	15	14	25	24	23	22	21	20	19	18	17	16
256	4 Meg x 16 x 4 bks	128	13 x 9 x 2	Row	26	13	12	26	15	14	25	24	23	22	21	20	19	18	17	16
128	4 Meg x 8 x 4 bks	128	12 x 10 x 2	Row	26	14	13	**x**[27]	15	26	25	24	23	22	21	20	19	18	17	16
256	8 Meg x 8 x 4 bks	256	13 x 10 x 2	Row	27	14	13	27	15	26	25	24	23	22	21	20	19	18	17	16

4.2.5 DRAM Performance Description

The overall memory performance is controlled by the DRAM timing register, pipelining depth used in the GMCH, memory speed grade, and the type of SDRAM used in the system. In addition, the exact performance in a system is also dependent on the total memory supported, external buffering, and memory array layout. The most important contribution to overall performance by the system memory controller is to minimize the latency required to initiate and complete requests to memory, and to support the highest possible bandwidth (full streaming, quick turnarounds). One measure of performance is the total flight time to complete a cache line request. A true discussion of performance involves the entire chipset, not just the system memory controller.

4.3 AGP Interface

See the *Accelerated Graphics Port Interface Specification, Revision 2.0* for additional details about the AGP interface.

4.3.1 Overview

The GMCH multiplexes an AGP interface with two DVO ports. The DVO ports can support single channel DVO devices or can combine to support dual-channel devices, supporting higher resolutions and refresh rates. When an external AGP device is used, the multiplexed DVO ports are not available, as the GMCH's IGD will be disabled. For more information on the multiplexed DVO interface, refer to Section 4.5.

The GMCH supports 1.5 V AGP 1X/2X/4X devices. The AGP signal buffers have one mode of operation; 1.5 V drive/receive (not 3.3 V tolerant). The GMCH supports 4X (266 MT/s) clocking transfers for read and write data, and sideband addressing. The GMCH has a 32-deep AGP request queue.

AGP semantic transactions to system SDRAM do not get snooped and are, therefore, not coherent with the processor caches. PCI semantic transactions on AGP to system SDRAM are snooped. AGP semantic accesses to the hub interface/PCI are not supported. PCI semantic accesses from an AGP master to hub interface are also not supported.

4.3.1.1 Lock Behavior

If the processor has established a lock to AGP, the GMCH immediately retries incoming FRAME# cycles. The reads will **not** be processed internally as a delayed transaction.

If the processor has established a lock to another resource other than AGP, the GMCH will accept incoming FRAME# cycles based on the other retry/disconnect rules. Since snoops cannot be generated to the processor while a lock is outstanding, eventually the GMCH's PCI interface backs up.

4.3.1.2 AGP Target Operations

As an initiator, the GMCH does not initiate cycles using AGP enhanced protocols. The GMCH supports AGP target interface to main memory only. The GMCH supports interleaved AGP and PCI transactions. The Table 4-6 summarizes target operation support of GMCH for AGP masters.

Table 4-6. AGP Commands Supported by GMCH When Acting As an AGP Target

AGP Command	GC/BE[3:0]# Encoding	GMCH Host Bridge	
		Cycle Destination	Response As AGP Target
Read	0000	Main Memory	Low Priority Read
	0000	Hub Interface	Complete with random data
Hi-Priority Read	0001	Main Memory	High Priority Read
	0000	Hub Interface	Complete with random data
Reserved	0010	N/A	No Response
Reserved	0011	N/A	No Response
Write	0100	Main Memory	Low Priority Write
	0100	Hub Interface	Cycle goes to SDRAM with BEs inactive
Hi-Priority Write	0101	Main Memory	High Priority Write
	0101	Hub Interface	Cycle goes to SDRAM with BEs inactive - does not go to hub interface
Reserved	0110	N/A	No Response
Reserved	0111	N/A	No Response
Long Read	1000	Main Memory	Low Priority Read
		Hub Interface	Complete locally with random data - does not go to hub interface
Hi-Priority Long Read	1001	Main Memory	High Priority Read
		Hub Interface	Complete with random data
Flush	1010	GMCH	Complete with QW of Random Data
Reserved	1011	N/A	No Response
Fence	1100	GMCH	No Response – Flag inserted in GMCH request queue
Reserved	1101	N/A	No Response
Reserved	1110	N/A	No Response
Reserved	1111	N/A	No Response

NOTE: N/A refers to a function that is not applicable

As a target of an AGP cycle, the GMCH supports all the transactions targeted at main memory and summarized in Table 4-6. The GMCH supports both normal and high priority read and write requests. The GMCH does not support AGP cycles to the hub interface. AGP cycles do not require coherency management and all AGP-initiator accesses to main memory using AGP protocol are treated as non-snoopable cycles. These accesses are directed to the AGP aperture in main memory that is programmed as either uncacheable (UC) memory or write combining (WC) in the processor's MTRRs.

4.3.1.3 AGP Transaction Ordering

The GMCH observes transaction ordering rules as defined by the *Accelerated Graphics Port Interface Specification, Revision 2.0*. The GMCH implements read after write hazard protection for normal priority commands through the use of a "pseudo FENCE." When a normal priority read command is placed in the command queue, it is checked for possible conflicts with any normal priority write commands that have been received but not yet delivered to SDRAM. If a potential conflict is detected, the GMCH inserts a FENCE between the read and all previous normal priority commands in the queue. This ensures that any normal priority write that was received prior to the read will be pushed to SDRAM before the read is serviced. As a result the read will be guaranteed to receive the new data when it is serviced. Note that all reads received prior to the read that potentially conflicts will also be serviced prior to the conflicting read.

High priority reads and writes are not checked for conflicts between themselves or normal priority reads and writes. AGP commands (delivered via PIPE# or SBA, not FRAME#) snoop the global SDRAM write buffer.

4.3.1.4 AGP Electrical Characteristics

The 4X data transfers use 1.5 V signaling levels as described in the *Accelerated Graphics Port Interface Specification, Revision 2.0*. The GMCH supports 1X/2X/PCI data transfers using 1.5 V signaling levels. The following table shows the data rates and signaling levels supported by the GMCH:

Data Rate	Signaling Level	
	1.5 V	3.3 V
PCI-66	Yes	No
1X AGP	Yes	No
2X AGP	Yes	No
4X AGP	Yes	No

4.3.1.5 Support for PCI-66 Devices

The GMCH's AGP interface can be used as a PCI-66 MHz interface with the following restrictions:

- Support for 1.5 V operation only.
- Support for only one device. GMCH does not provide arbitration or electrical support for more than one PCI-66 device.
- The PCI-66 device must meet the *Accelerated Graphics Port Interface Specification, Revision 2.0*.
- The GMCH does not provide full PCI-to-PCI bridge support between AGP/PCI and hub interface. Traffic between AGP and hub interface is limited to hub interface-to-AGP memory writes.
- LOCK# signal is not present. Neither inbound nor outbound locks are supported.
- SERR#/PERR# signals are not present.
- 16 clock Subsequent Data Latency timer (instead of 8).

4.3.1.6 4X AGP Protocol

In addition to the 1X and 2X AGP protocol, the GMCH supports 4X AGP read and write data transfers and 4X sideband address generation. The 4X operation is compliant with the 4X AGP specification as currently described in the *Accelerated Graphics Port Interface Specification, Revision 2.0*.

The GMCH indicates that it supports 4X data transfers through RATE[2] (bit 2) of the AGP Status register. When DATA_RATE[2] (bit 2) of the AGP Command register is set to 1 during system initialization, the GMCH performs AGP read and write data transactions using 4X protocol. This bit is not dynamic. Once this bit is set during initialization, the data transfer rate will not change.

The 4X data transfer protocol provides 1.06 GB/s transfer rates. The control signal protocol for the 4X data transfer protocol is identical to 1X/2X protocol. In 4X mode, 16 bytes of data are transferred during each 66 MHz clock period. The minimum throttle-able block size remains four, 66 MHz clocks which means 64 bytes of data is transferred per block. Three additional signal pins are required to implement the 4X data transfer protocol. These signal pins are complementary data transfer strobes for the AD bus (2) and the SBA bus (1).

4.3.1.7 Fast Writes

The Fast Write (FW) transaction is from the core logic to the AGP master acting as a PCI target. This type of access is required to pass data/control directly to the AGP master instead of placing the data into main memory and then having the AGP master read the data. For 1X transactions, the protocol simply follows the *PCI Local Bus Specification, Revision 2.2*. However, for higher speed transactions (2X or 4X), FW transactions follow a combination for PCI and AGP bus protocols for data movement.

4.3.1.8 AGP 1.5 V Connector

GMCH's AGP buffers only support 1.5 V operation. Therefore, 845G chipsets only support 1.5 V AGP connectors.

4.3.2 PCI Semantic Transactions on AGP

The GMCH accepts and generates PCI semantic transactions on the AGP bus. The GMCH guarantees that PCI semantic accesses to SDRAM are kept coherent with the processor caches by generating snoops to the processor bus.

4.3.2.1 GMCH Initiator and Target PCI Operations

Table 4-7 summarizes PCI target operation support of the GMCH for AGP/PCI_B bus initiators. The cycles can be either destined to main memory or the hub interface bus.

Table 4-7. PCI Commands Supported by GMCH When Acting As a PCI Target

PCI Command	GC/BE[3:0]# Encoding	GMCH	
		Cycle Destination	Response As PCI Target
Interrupt Acknowledge	0000	N/A	No Response
Special Cycle	0001	N/A	No Response
I/O Read	0010	N/A	No Response
I/O Write	0011	N/A	No Response
Reserved	0100	N/A	No Response
Reserved	0101	N/A	No Response
Memory Read	0110	Main Memory	Read
	0110	Hub Interface	No Response
Memory Write	0111	Main Memory	Posts Data
	0111	Hub Interface	No Response
Reserved	1000	N/A	No Response
Reserved	1001	N/A	No Response
Configuration Read	1010	N/A	No Response
Configuration Write	1011	N/A	No Response
Memory Read Multiple	1100	Main Memory	Read
	1100	Hub Interface	No Response
Dual Address Cycle	1101	N/A	No Response
Memory Read Line	1110	Main Memory	Read
	1110	Hub Interface	No Response
Memory Write and Invalidate	1111	Main Memory	Posts Data
	1111	Hub Interface	No Response

NOTE: N/A refers to a function that is not applicable

As a target of an AGP/PCI cycle, the GMCH only supports the following transactions:

Memory Read: The GMCH issues one snoop and the entire cache line of read data is buffered. If a memory read bursts across the cache line, another snoop is issued but the transaction will be disconnected on the cache line boundary. Subsequent memory read transaction hitting the cache line buffer return data from the buffer.

Memory Read Line, and Memory Read Multiple: These commands are treated identically by the GMCH. The GMCH issues two snoops (a snoop followed by a snoop-ahead) on the host bus and releases the processor bus for other traffic. When the first DWord of the first cache line is delivered and GFRAME# is still asserted, the GMCH issues another snoop-ahead on the host bus. This allows the GMCH to continuously supply data during memory read line and memory read multiple bursts. When the transaction terminates, there may be a minimum of 2 cache lines and a maximum of 2 cache lines plus 7 DWords buffered. Subsequent memory reads hitting the buffers will return data from the buffer.

Memory Write and Memory Write and Invalidate: These commands are aliased and processed identically. The GMCH supports data streaming for PCI-to-DRAM writes based on its ability to buffer up to 128 bytes (16 QWords) of data before a snoop cycle must be completed on the host bus. The GMCH is typically able to support longer write bursts, with the maximum length dependent upon concurrent host bus traffic during PCI-DRAM write data streaming.

Fast Back-to-Back Transactions: The GMCH, as a target, supports fast back-to-back cycles from a PCI initiator. As a PCI initiator, the GMCH is responsible for translating host cycles to AGP/PCI_B cycles. The GMCH also transfers hub interface to AGP/PCI_B write cycles. Table 4-8 shows all the cycles that need to be translated.

Table 4-8. PCI Commands Supported by GMCH When Acting As an AGP/PCI_B Initiator (Sheet 1 of 2)

Source Bus Command	Other Encoded Information	GMCH Host Bridge	
		Corresponding PCI_B Command	GC/BE[3:0]# Encoding
Source Bus: Host			
Deferred Reply	Don't Care	None	N/A
Interrupt Acknowledge	Length ≤ 8 Bytes	None	N/A
Special Cycle	Shutdown	None	N/A
	Halt	None	N/A
	Stop Clock Grant	None	N/A
	All Other Combinations	None	N/A
Branch Trace Message	None	None	N/A
I/O Read	Length ≤ 8 Bytes up to 4 BEx Asserted	I/O Read	0010
I/O Write	Length ≤ 8 Bytes up to 4 BEx Asserted	I/O Write	0011
I/O Read to 0CFCh	Length ≤ 8 Bytes up to 4 BEx Asserted	Configuration Read	1010
I/O Write to 0CFCh	Length ≤ 8 Bytes up to 4 BEx Asserted	Configuration Write	1011
	Length < 8 Bytes without All BEs Asserted	Memory Read	0110
Memory Read (Code or Data)	Length = 8 Bytes with All BEs Asserted	Memory Read	1110
Memory Read Invalidate	Length = 16 Bytes	None	N/A
	Length = 32 Bytes Code Only	Memory Read	1110
Memory Write	Length < 8 Bytes without All BEs Asserted	Memory Write	0111
	Length = 16 Bytes	None	N/A
	Length = 32 Bytes	Memory Write	0111
Locked Access	All Combinations	Unlocked Access[1]	As Applicable
Reserved Encodings	All Combinations	None	N/A

Table 4-8. PCI Commands Supported by GMCH When Acting As an AGP/PCI_B Initiator (Sheet 2 of 2)

Source Bus Command	Other Encoded Information	GMCH Host Bridge	
		Corresponding PCI_B Command	GC/BE[3:0]# Encoding
Source Bus: Host			
EA Memory Access	Address ≥ 4 GB	None	N/A
Source Bus: Hub Interface			
Memory Write	-	Memory Write	0111

NOTES:
1. Processor to AGP/PCI_B bus can result in deadlocks. Locked access to AGP/PCI_B bus is strongly discouraged.
2. N/A refers to a function that is not applicable, Not Supported refers to a function that is available but specifically not implemented on the GMCH

As an initiator of AGP/PCI_B cycle, the GMCH only supports the following transactions:

- **Memory Read:** All processor to AGP/PCI_B reads will use the memory read command.
- **Memory Write:** The GMCH initiates AGP/PCI_B cycles on behalf of the processor or hub interface. The GMCH does not issue memory write and invalidate as an initiator. The GMCH does not support write merging or write collapsing. The GMCH combines processor-to-PCI writes (DWord or QWord) to provide bursting on the AGP/PCI_B bus. The GMCH allows non-snoopable write transactions from hub interface to the AGP/PCI_B bus.
- **I/O Read and Write:** I/O read and write from the processor are sent to the AGP/PCI_B bus. I/O base and limit address range for PCI_B bus are programmed in AGP/PCI_B configuration registers. All other accesses that do not correspond to this programmed address range are forwarded to the hub interface.
- **Exclusive Access:** The GMCH does not issue a locked cycle on AGP/PCI_B bus on the behalf of either the processor or the hub interface. The hub interface and processor locked transactions to AGP/PCI_B are initiated as unlocked transactions by the GMCH on the AGP/PCI_B bus.

4.3.2.2 GMCH Retry/Disconnect Conditions

The GMCH generates retry/disconnect according to the *Accelerated Graphics Port Interface Specification, Revision 2.0* rules when being accessed as a target from the AGP interface (using PCI semantics).

Reads

- Read cycle is immediately retried (the GMCH retries the read cycle in three PCI clocks from GFRAME# driven active) due to a pending processor-AGP or hub interface-AGP write transaction. It is further handled using the Delayed Transaction mechanism described in a later section. This can occur as a result of the processor posting memory write cycles to the AGP or the GMCH storing a processor to AGP write cycle in the deferred queue. The SDRAM read cycle is immediately retried and the GMCH initiates the Delayed Transaction activity by issuing a single snoop on the processor bus. The Delayed transaction cannot complete until after the pending processor-AGP or hub interface-AGP transactions have been completed on the AGP.
- Processor-to-AGP write or hub interface-to-AGP write is posted after the processing of AGP/PCI to SDRAM read has started but prior to data being returned. This scenario can occur due to the level of concurrency supported by GMCH. The AGP/PCI cycle will be retried as soon as condition is recognized and it is further handled as a Delayed Transaction.
- Processor-to-AGP read request is internally pending when an AGP-DRAM read is issued or processor-to-AGP read request is issued after an AGP-DRAM read request is generated. The AGP cycle is retried based on 32-clock timeout. The timer is triggered at the point when internally pending processor-to-AGP read request is observed.
- Processor-to-AGP write occurs after AGP-to-SDRAM memory read line or memory read multiple data has been returned. The GMCH stops snooping ahead when the processor-to-AGP write occurs and the GMCH disconnects when the last DWord of data is read (between 2 and 3 cachelines).
- AGP-DRAM burst is disconnected after crossing the 4-KB address boundary.
- AGP-DRAM burst is disconnected if consecutive data phase can not complete within 8 clocks and there is an AGP non-snoopable request or host bridge-to-AGP request pending.
- AGP-DRAM burst is disconnected after crossing a 2-KB address. No snoop is generated into next 2-KB page.

Writes

- If the AGP/PCI Inbound buffer is full, the GMCH retries initial write request in the presence of a pending AGP request issued by the AGP master using enhanced AGP protocol (i.e., non-snoopable) or in the presence of host bridge request for AGP ownership (when there is a pending processor-AGP or hub interface-AGP transaction).
- If the AGP Inbound buffer is full and there is no pending AGP non-snoopable request and no host bridge request, the GMCH inserts wait states. It retries as soon as AGP non-snoopable request is generated or an internal host bridge to AGP request is generated.
- If AGP Inbound buffers become full during the burst, the GMCH disconnects within 8 clocks if there is an AGP non-snoopable request or host bridge-to-AGP request present.

An AGP-DRAM burst is disconnected after crossing the 2-KB address boundary.

4.4 Integrated Graphics Device (IGD)

The GMCH provides a highly integrated graphics accelerator while allowing a flexible integrated system graphics solution (see Figure 4-1).

Figure 4-1. Intel® GMCH Graphics Block Diagram

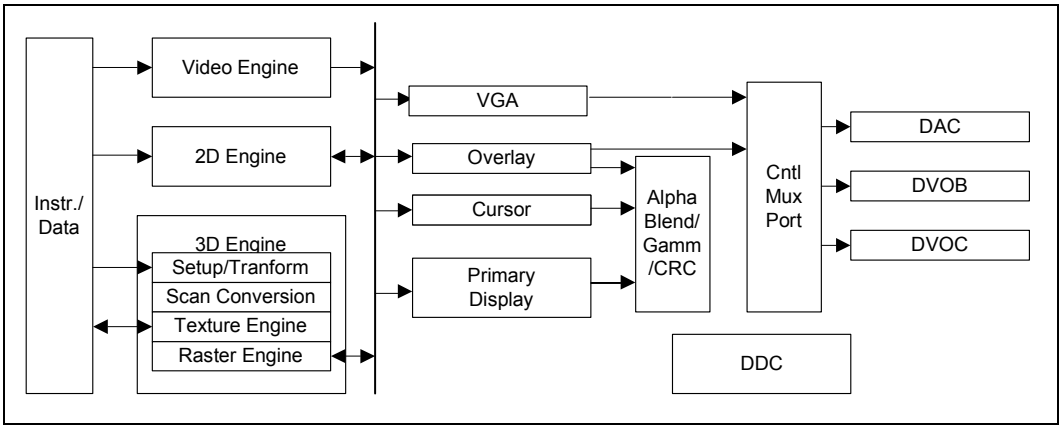

High-bandwidth access to data is provided through the system memory port. The GMCH can access graphics data located in system memory at 1.0 GB/s (using SDR, PC133 memory), 1.6 GB/s (using DDR200 memory), and 2.1 GB/s (using DDR266). The GMCH uses Intel's Direct Memory Execution model to fetch textures from system memory. The GMCH includes a cache controller to avoid frequent memory fetches of recently used texture data.

The GMCH is able to drive an integrated DAC, and/or two DVO ports (multiplexed with AGP) capable of driving an ADD card. The DAC is capable of driving a standard progressive scan analog monitor with resolutions up to 2048x1536 at 60 Hz. The DVO ports are capable of driving a variety of TV-Out, TMDS, and LVDS transmitters.

The GMCH's IGD contains several functional units (see Figure 4-1). The major components in the IGD are the graphics engines, planes, pipe, and ports. The GMCH has a 3D/2D Instruction Processing unit to control the 3D and 2D engines. Data is input to the IGD's 2D and 3D engines from the system memory controller. The output of the engines are surfaces sent to memory, which are then retrieved and processed by GMCH's planes.

The GMCH contains a variety of planes (e.g., primary display, overlay, cursor, and VGA). The IGD does not support VGA memory accesses during graphics accelerator operations (e.g., 2D and 3D engine activity). The Intel graphics driver controls VGA and high-resolution graphics interaction. VGA and high resolution interaction will remain exclusive.

A plane consists of a rectangular shaped image that has characteristics such as source, size, position, method, and format. These planes get attached to source surfaces that are rectangular memory surfaces with a similar set of characteristics. They are also associated with a destination pipe.

A pipe consists of a set of combined planes and a timing generator. The GMCH has a single display pipe, which means that the GMCH can support a single display stream. A port is the destination for the result of the pipe. The GMCH contains three display ports, 1 analog (DAC), and two digital (DVO ports B and C). The ports will be explained in more detail in a subsequent section.

The entire IGD is fed with data from the memory controller. The performance of the IGD is directly related to the amount of bandwidth available. If the engines are not receiving data fast enough from the memory controller (e.g., PC133), the rest of the IGD will also be affected.

The rest of this section focuses on explaining the IGD components and dependencies.

4.4.1 3D Engine

The 3D engine of the GMCH has been designed with a deep pipelined architecture, where performance is maximized by allowing each stage of the pipeline to simultaneously operate on different primitives or portions of the same primitive. The GMCH supports Perspective-correct Texture Mapping, Multitextures, Bump-Mapping, Cubic Environment Maps, Bilinear, Trilinear and Anisotropic MIP mapped filtering, Gouraud shading, Alpha-blending, Vertex and Per Pixel Fog and Z/W Buffering.

The 3D pipeline subsystem performs the 3D rendering acceleration. The main blocks of the pipeline are the Setup Engine, Scan Converter, Texture Pipeline, and Raster Pipeline. A typical programming sequence would be to send instructions to set the state of the pipeline followed by rendering instructions containing 3D primitive vertex data.

4.4.1.1 Setup Engine

The setup stage of the pipeline takes the input data associated with each vertex of a 3D primitive and computes the various parameters required for scan conversion. In formatting this data, the GMCH maintains sub-pixel accuracy.

3D Primitives and Data Formats Support

The 3D primitives rendered by GMCH are points, lines, discrete triangles, line strips, triangle strips, triangle fans, polygons, indexed vertices as well as state variables. In addition to this, the GMCH supports DirectX's Flexible Vertex Format (FVF) that enables the application to specify a variable length of parameter list obviating the need for sending unused information to the hardware. Strips, Fans, and Indexed Vertices, as well as FVF, improves delivered vertex rate to the setup engine significantly.

Pixel Accurate "Fast" Scissoring and Clipping Operation

The GMCH supports 2D clipping to a scissor rectangle within the drawing window. Objects are clipped to the scissor rectangle, avoiding processing pixels that fall outside the rectangle. The GMCH's clipping and scissoring in hardware reduce the need for software to clip objects; this improves performance. During the setup stage, the GMCH clips objects to the scissor window.

A scissor rectangle accelerates the clipping process by allowing the driver to clip to a bigger region than the hardware renders to. The scissor rectangle needs to be pixel accurate, and independent of line and point width. The GMCH will support a single scissor box rectangle, which can be enabled or disabled.

Zone Rendering

Zone Rendering Technology is a unique mechanism that addresses memory bandwidth limitations by reducing the required memory bandwidth for graphics. The 3D graphics engine divides the frame buffer into rectangular zones and then sorts the triangles into memory by zone. The 3D graphics engine then completely processes the zone, writing the pixel data to memory and then proceeds to the next zone. By processing only a single zone of the frame buffer at a time, the use of on-chip memory (cache) is highly optimized and each pixel in each scene is drawn only one time. As a result, the system memory bandwidth required to render each scene is greatly reduced.

Depth-Bias

The GMCH supports source Depth biasing. The Depth bias value is specified in the vertex command packet on a per primitive basis. The value ranges from -1 to 1. The Depth bias value is added to the z or w value of the vertices. This is used for coplanar polygon priority. By using Depth bias, it is possible to offset the destination z value (compare value) before comparing with the new z value.

Backface Culling

The GMCH discards polygons from further processing, if they are facing away from or towards the user's viewpoint. This operation, referred to as "Back Face Culling," is accomplished based on the "clockwise" or "counter-clockwise" orientation of the vertices on a primitive. This can be enabled or disabled by the driver.

4.4.1.2 Scan Converter

The Scan Converter takes the vertex and edge information is used to identify all pixels that are affected by features being rendered. It works on a per-polygon basis.

Pixel Rasterization Rules

The GMCH supports both OpenGL and D3D pixel rasterization rules to determine whether a pixel is filled by the triangle or line. For both D3D and OpenGL modes, a top-left filling convention for filling geometry is used. Pixel rasterization rule on rectangle primitive is also supported using the top-left fill convention.

4.4.1.3 2D Functionality

The alpha stretch BLT function can stretch source data in the X and Y directions to a destination larger or smaller than the source. Stretch BLT functionality expands a region of memory into a larger or smaller region using replication and interpolation. The stretch BLT function also provides format conversion and data alignment.

4.4.1.4 Texture Engine

The GMCH allows an image, pattern, or video to be placed on the surface of a 3D polygon. The texture processor performs texture color or chromakey matching, texture filtering (anisotropic, trilinear and bilinear interpolation), and YUV-to-RGB conversions.

Perspective Correct Texture Support

A textured polygon is generated by mapping a 2D texture pattern onto each pixel of the polygon. A texture map is like wallpaper pasted onto the polygon. Since polygons are rendered in perspective, it is important that texture be mapped in perspective as well.

Texture Formats and Storage

The GMCH supports up to 32 bits of color for non-palettized textures.

Texture Decompression

DX Texture Compression reduces the bandwidth required to deliver textures. As the textures' average sizes get larger with higher color depth and multiple textures become the norm, it becomes increasingly important to provide a mechanism to compress textures. Texture decompression formats supported include DXTn and FXT1.

Texture Chromakey

Chromakey describes a method of removing a specific color or range of colors from a texture map before it is applied to an object. For "nearest" texture filter modes, removing a color simply makes those portions of the object transparent (the previous contents of the back buffer show through). For "linear" texture filtering modes, the texture filter is modified if only the non-nearest neighbor texels match the key (range).

Anti-Aliasing

Aliasing is one of the artifacts that degrade image quality. In its simplest manifestation, aliasing causes the jagged staircase effects on sloped lines and polygon edges. Another artifact is the moiré patterns, which occur as a result of the fact that there is a very small number of pixels available on screen to contain the data of a high resolution texture map. More subtle effects are observed in animation, where very small primitives blink in and out of view.

Texture Map Filtering

Many texture mapping modes are supported. Perspective correct mapping is always performed. As the map is fitted across the polygon, the map can be tiled, mirrored in either the U or V directions, or mapped up to the end of the texture and no longer placed on the object (this is known as clamp mode). The way a texture is combined with other object attributes is also definable.

The GMCH supports up to 12 Levels-of-Detail (LODs) ranging in size from 2048x2048 to 1x1 texels. (A texel is defined as a texture map element). Textures need not be square. Included in the texture processor is a texture cache that provides efficient MIP-mapping.

GMCH supports 7 types of texture filtering:

- Nearest (aka Point Filtering): Texel with coordinates nearest to the desired pixel is used. (This is used if only one LOD is present).
- Linear (aka Bilinear Filtering): A weighted average of a 2x2 area of texels surrounding the desired pixel are used. (This is used if only one LOD is present).
- Nearest MIP Nearest (aka Point Filtering): This is used if many LODs are present. The nearest LOD is chosen and the texel with coordinates nearest to the desired pixel are used.
- Linear MIP Nearest (Bilinear MIP Mapping): This is used if many LODs are present. The nearest LOD is chosen and a weighted average of a 2x2 area of texels surrounding the desired pixel are used (four texels). This is also referred to as Bilinear MIP Mapping.
- Nearest MIP Linear (Point MIP Mapping): This is used if many LODs are present. Two appropriate LODs are selected and within each LOD the texel with coordinates nearest to the desired pixel are selected. The Final texture value is generated by linear interpolation between the two texels selected from each of the MIP Maps.
- Linear MIP Linear (Trilinear MIP Mapping): This is used if many LODs are present. Two appropriate LODs are selected and a weighted average of a 2x2 area of texels surrounding the desired pixel in each MIP Map is generated (four texels per MIP Map). The Final texture value is generated by linear interpolation between the two texels generated for each of the MIP Maps. Trilinear MIP Mapping is used to minimize the visibility of LOD transitions across the polygon.
- Anisotropic MIP Nearest (Anisotropic Filtering): This is used if many LODs are present. The nearest LOD-1 level will be determined for each of four sub-samples for the desired pixel. These four sub-samples are then bilinear filtered and averaged together.

Both D3D and OGL (Rev.1.1) allow support for all these filtering modes.

Multiple Texture Composition

The GMCH also performs multiple texture composition. This allows the combination of two or greater MIP Maps to produce a new one with new LODs and texture attributes in a single or iterated pass.

Flexible vertex format support allows multitexturing because it makes it possible to pass multiple texture information in the vertex structure.

Cubic Environment Mapping

Environment maps allow applications to render scenes with complex lighting and reflections while significantly decreasing processor load. There are several methods to generate environment maps (e.g., spherical, circular, and cubic). The GMCH supports cubic reflection mapping over spherical and circular since it is the best choice to provide real-time environment mapping for complex lighting and reflections.

Cubic Mapping requires a texture map for each of the six cube faces. These can be generated by pointing a camera with a 90-degree field-of-view in the appropriate direction. Per-vertex vectors (normal, reflection, or refraction) are interpolated across the polygon and the intersection of these vectors with the cube texture faces is calculated. Texel values are then read from the intersection point on the appropriate face and filtered accordingly.

4.4.1.5 Raster Engine

The Raster Engine is where the color data (e.g., fogging, specular RGB, texture map blending, etc.) is processed. The final color of the pixel is calculated and the RGBA value combined with the corresponding components resulting from the Texture Engine. These textured pixels are modified by the specular and fog parameters. These specular highlighted, fogged, textured pixels are color blended with the existing values in the frame buffer. In parallel, stencil, alpha and depth buffer tests are conducted that will determine whether the Frame and Depth Buffers will be updated with the new pixel values.

Texture Map Blending

Multiple Textures can be blended together in an iterative process and applied to a primitive. The GMCH allows up to four texture coordinates and texture maps to be specified onto the same polygon. Also, the GMCH supports using a texture coordinate set to access multiple texture maps. State variables in multiple texture are bound to texture coordinates, texture map, or texture blending.

Combining Intrinsic and Specular Color Components

The GMCH allows an independently specified and interpolated “specular RGB” attribute to be added to the post-texture blended pixel color. This feature provides a full RGB specular highlight to be applied to a textured surface, permitting a high-quality reflective colored lighting effect not available in devices that apply texture after the lighting components have been combined. If specular-add state variable is disabled, only the resultant colors from the map blending are used. If this state variable is enabled, RGB values from the output of the map blending are added to values for R_S, G_S, B_S on a component by component basis.

Color Shading Modes

The Raster Engine supports the flat and Gouraud shading modes. These shading modes are programmed by the appropriate state variables issued through the command stream.

Flat shading is performed by smoothly interpolating the vertex intrinsic color components (Red, Green, Blue), Specular (RGB), Fog, and Alpha to the pixel, where each vertex color has the same value. The setup engine substitutes one of the vertex’s attribute values for the other two vertices attribute values thereby creating the correct flat shading terms. This condition is set up by the appropriate state variables issued prior to rendering the primitive.

Gouraud shading is performed by smoothly interpolating the vertex intrinsic color components (Red, Green, Blue), Specular (RGB), Fog, and Alpha to the pixel, where each vertex color has a different value.

All the attributes can be selected independently to one of the shading mode by setting the appropriate value state variables.

Color Dithering

Color Dithering helps to hide color quantization errors. Color Dithering takes advantage of the human eye’s propensity to “average” the colors in a small area. Input color, alpha, and fog components are converted from 8-bit components to 5- or 6- bit component by dithering. Dithering is performed on blended texture pixels. In 32-bit mode, dithering is not performed on the components.

Vertex and Per Pixel Fogging

Fogging is used to create atmospheric effects (e.g., low visibility conditions) in flight simulator-type games. It adds another level of realism to computer-generated scenes. Fog can be used for depth cueing or hiding distant objects. With fog, distant objects can be rendered with fewer details (less polygons), thereby improving the rendering speed or frame rate. Fog is simulated by attenuating the color of an object with the fog color as a function of distance; the greater the distance, the higher the density (lower visibility for distant objects). There are two ways to implement the fogging technique: per-vertex (linear) fogging and per-pixel (non-linear) fogging. The per-vertex method interpolates the fog value at the vertices of a polygon to determine the fog factor at each pixel within the polygon. This method provides realistic fogging as long as the polygons are small. With large polygons (e.g., a ground plane depicting an airport runway), the per-vertex technique results in unnatural fogging.

The GMCH supports both types of fog operations, vertex and per pixel or table fog. If fog is disabled, the incoming color intensities are passed unchanged to the destination blend unit.

Alpha Blending (Frame Buffer)

Alpha Blending adds the material property of transparency or opacity to an object. Alpha blending combines a source pixel color (RsGsBs) and alpha(As) component with a destination pixel color (RdGdBd) and alpha(Ad) component. Thus, for example, a glass surface on top (source) of a red surface (destination) would allow much of the red base color to show through.

Blending allows the source and destination color values to be multiplied by programmable factors and then combined via a programmable blend function. The combined and independent selection of factors and blend functions for color and alpha is supported.

DXn and OGL Logic Ops

Both APIs provide a mode to use bitwise ops in place of alpha blending. This is used for rubber-banding (i.e., draw a rubber band outline over the scene using an XOR operation). Drawing it again restores the original image without having to do a potentially expensive redraw.

Color Buffer Formats: 8, 16, or 32 bits per pixel (Destination Alpha)

The Raster Engine supports 8-bit, 16-bit, and 32-bit Color Buffer formats. The bit format of Color and Z are allowed to mix. The GMCH supports both double and triple buffering, where one buffer is the primary buffer used for display and one or two are the back buffer(s) used for rendering.

The frame buffer of the GMCH contains at least two hardware buffers—the Front Buffer (display buffer) and the Back Buffer (rendering buffer). While the back buffer may actually coincide with (or be part of) the visible display surface, a separate (screen or window-sized) back buffer is used to permit double-buffered drawing. That is, the image being drawn is not visible until the scene is complete and the back buffer made visible (via an instruction) or copied to the front buffer (via a 2D BLT operation). Rendering to one and displaying from the other removes the possibility of image tearing. This also speeds up the display process over a single buffer. Additionally, triple back buffering is also supported. The instruction set of the GMCH provides a variety of controls for the buffers (e.g., initializing, flip, clear, etc.).

Depth Buffer

The Raster Engine can read and write from this buffer and use the data in per fragment operations that determine whether resultant color and depth value of the pixel for the fragment are to be updated or not.

Typical applications for entertainment or visual simulations with exterior scenes require far/near ratios of 1000 to 10000. At 1000, 98% of the range is spent on the first 2% of the depth. This can cause hidden surface artifacts in distant objects, especially when using 16-bit depth buffers. A 24-bit Z-buffer provides 16 million Z-values as opposed to only 64K with a 16-bit Z-buffer. With lower Z-resolution, two distant overlapping objects may be assigned the same Z-value. As a result, the rendering hardware may have a problem resolving the order of the objects, and the object in the back may appear through the object in the front.

By contrast, when W (or eye-relative z) is used, the buffer bits can be more evenly allocated between the near and far clip planes in world space. The key benefit is that the ratio of far and near is no longer an issue, allowing applications to support a maximum range of miles, yet still get reasonably accurate depth buffering within inches of the eye point.

The GMCH supports a flexible format for the floating-point W buffer, wherein the number of exponent bits is programmable. This allows the driver to determine variable precision as a function of the dynamic range of the W (screen-space Z) parameter.

The selection of depth buffer size is relatively independent of the color buffer. A 16-bit or 24-bit Z/W buffer can be selected with a 16-bit color buffer. Z buffer is not supported in 8-bit mode.

Stencil Buffer

The Raster Engine provides 8-bit stencil buffer storage in 32-bit mode and the ability to perform stencil testing. Stencil testing controls 3D drawing on a per pixel basis, conditionally eliminating a pixel on the outcome of a comparison between a stencil reference value and the value in the stencil buffer at the location of the source pixel being processed. They are typically used in multipass algorithms to achieve special effects (e.g., decals, outlining, shadows, and constructive solid geometry rendering).

Projective Textures

The GMCH supports projective textures. These textures require three floating-point texture coordinates to be included in the FVF format. Projective textures enable special effects (e.g., projecting spot light textures obliquely onto walls, etc.).

4.4.1.6 2D Engine

The GMCH provides 2D hardware acceleration for block transfers of data (BLTs). The BLT engine provides the ability to copy a source block of data to a destination and perform operations on the data using a pattern, and/or another destination. The Stretch BLT engine is used to move source data to a destination that need not be the same size, with source transparency. Performing these common tasks in hardware reduces processor load and, thus, improves performance.

4.4.1.7 GMCH VGA Registers

The 2D registers are a combination of registers defined by IBM when the Video Graphics Array (VGA) was first introduced and others that Intel has added to support graphics modes that have color depths, resolutions, and hardware acceleration features that go beyond the original VGA standard.

4.4.1.8 Logical 128-Bit Fixed BLT and 256-Bit Fill Engine

Using this BLT engine accelerates the Graphical User Interface (GUI) of Microsoft Windows*. The 128-bit GMCH BLT Engine provides hardware acceleration of block transfers of pixel data for many common Windows operations. The term BLT refers to a block transfer of pixel data between memory locations. The BLT engine can be used for the following:

- Move rectangular blocks of data between memory locations.
- Data Alignment.
- Perform logical operations (raster ops).

The GMCH BLT engine has the ability to expand monochrome data into a color depth of 8, 16, or 32 bits. BLTs can be either opaque or transparent. Opaque transfers, move the data specified to the destination. Transparent transfers, compare destination color to source color and write according to the mode of transparency selected.

Data is horizontally and vertically aligned at the destination. If the destination for the BLT overlaps with the source memory location, the GMCH can specify which area in memory to begin the BLT transfer. Hardware is included for all 256 raster operations (Source, Pattern, and Destination) defined by Microsoft, including transparent BLT.

The GMCH has instructions to invoke BLT and STRBLT operations, permitting software to set up instruction buffers and use batch processing. The GMCH can perform hardware clipping during BLTs.

4.4.2 Video Engine

4.4.2.1 Hardware Motion Compensation

The Motion Compensation (MC) process consists of reconstructing a new picture by predicting (either forward, backward, or bidirectionally) the resulting pixel colors from one or more reference pictures. The GMCH receives the video stream and implements Motion Compensation and subsequent steps in hardware. Performing Motion Compensation in hardware reduces the processor demand of software-based MPEG-2 decoding, and thus improves system performance.

The Motion Compensation functionality is overloaded onto the texture cache and texture filter. The texture cache is used to typically access the data in the reconstruction of the frames and the filter is used in the actual motion compensation process. To support this overloaded functionality the texture cache additionally supports the following input formats:

- YUV420 planar

Sub-Picture Support

Sub-picture is used for two purposes; one is Subtitles for movie captions, etc. which are superimposed on a main picture, and another is for Menus to provide some visual operation environments for the user of the player.

A DVD allows movie subtitles to be recorded as Sub-pictures. On a DVD disc, it is called “Subtitle” because it has been prepared for storing captions. Since the disc can have a maximum of 32 tracks for Subtitles, they can be used for various applications; for example, as Subtitles in different languages or other information to be displayed.

There are two kinds of Menus, the System Menus and other In-Title Menus. First, the System Menus are displayed and operated at startup of or during the playback of the disc or from the stop state. Second, In-Title menus can be programmed as a combination of Sub-picture and Highlight commands to be displayed during playback of the disc.

The GMCH supports sub-picture for DVD and DBS by mixing the two video streams via alpha blending. Unlike color keying, alpha blending provides a softer effect and each pixel that is displayed is a composite between the two video stream pixels. The GMCH can utilize four methods when dealing with sub-pictures. The flexibility enables the GMCH to work with all sub-picture formats.

4.4.2.2 Planes

A plane consists of a rectangular shaped image that has characteristics such as source, size, position, method, and format. These planes get attached to source surfaces, which are rectangular memory surfaces with a similar set of characteristics. They are also associated with a particular destination pipe.

4.4.2.3 Cursor Plane

The cursor plane is one of the simplest display planes. With a few exceptions, it has a fixed size of 64x64 and a fixed Z-order (top). In legacy modes, the cursor can cause the display data below it to be inverted.

4.4.2.4 Overlay Plane

The overlay engine provides a method of merging either video capture data (from an external Video Capture device) or data delivered by the processor, with the graphics data on the screen. The source data can be mirrored horizontally or vertically or both.

Source/Destination Color Keying/Chromakeying

Overlay source/destination chromakeying enables blending of the overlay with the underlying graphics background. Destination color/chromakeying can be used to handle occluded portions of the overlay window on a pixel by pixel basis that is actually an underlay. Destination color keying supports a specific color (8- or 15-bit) mode as well as 32-bit alpha blending.

Source color/chroma keying is used to handle transparency based on the overlay window on a pixel by pixel basis. This is used when “blue screening” an image to overlay the image on a new background later.

Gamma Correction

To compensate for overlay color intensity loss due to the non-linear response between display devices, the overlay engine supports independent gamma correction. This allows the overlay data to be converted to linear data or corrected for the display device when not blending.

YUV-to-RGB Conversion

The format conversion can be bypassed in the case of RGB source data. The format conversion assumes that the YUV data is input in the 4:4:4 format and uses the full range scale.

Maximum Resolution and Frequency

The maximum frequency supported by the overlay logic is 170 MHz. The maximum resolution is dependent on a number of variables.

Deinterlacing Support

For display on a progressive computer monitor, interlaced data that has been formatted for display on interlaced monitors (TV), needs to be de-interlaced. The simple approaches to de-interlacing create unwanted display artifacts. More advanced de-interlacing techniques have a large cost associated with them. The compromise is to provide low cost but effective solutions and enable both hardware and software based external solutions. Software-based solutions are enabled through a high bandwidth transfer to system memory and back.

Dynamic Bob and Weave

Interlaced data that originates from a video camera creates two fields that are temporally offset by 1/60 of a second. There are several schemes to deinterlace the video stream: line replication, vertical filtering, field merging, and vertical temporal filtering. Field merging takes lines from the previous field and inserts them into the current field to construct the frame – this is known as Weaving. This is the best solution for images with little motion; however; showing a frame that consists of the two fields will have serration or feathering of moving edges when there is motion in the scene. Vertical filtering or "Bob" interpolates adjacent lines rather replicating the nearest neighbor. This is the best solution for images with motion; however, it will have reduced spatial resolution in areas that have no motion and introduces "jaggies." In absence of any other deinterlacing, these form the baseline and are supported by the GMCH.

Scaling Filter and Control

The scaling filter has 2-vertical taps and 5-horizontal taps. Arbitrary scaling (per pixel granularity) for any video source format is supported.

The overlay logic can scale an input image up to 1600x1200 with no major degradation in the filter used as long as the maximum frequency limitation is met. Display resolution and refresh rate combinations where the dot clock is greater than the maximum frequency require the overlay to use pixel replication.

4.4.3 Pipes

The display consists of a single pipe. The pipe can operate in a single-wide or double-wide mode at 2X graphics core clock; however, it is effectively limited by its display port (350 MHz max). The primary display plane and the cursor plane provides a "double wide" mode to feed the pipe.

4.4.3.1 Clock Generator Units (DPLL)

The clock generator units provide a stable frequency for driving display devices. It operates by converting an input reference frequency into an output frequency. The timing generators take their input from the internal DPLL device that is programmable to generate pixel clocks in the range of 25 MHz –350 MHz. Accuracy for VESA timing modes is required to be within ± 0.5%.

The DPLL can take a reference frequency from the external reference input (DREFCLK) or the TV clock input (DVOBC_CLKINT).

4.4.4 Ports

For more information on ports, refer to Section 4.5.

4.5 Display Interfaces

The GMCH has three display ports, one analog and two digital. Each port can transmit data according to one or more protocols. The digital ports are connected to an external device that converts one protocol to another. Examples of this are TV encoders, external DACs, LVDS transmitters, and TMDS transmitters. Each display port has control signals that may be used to control, configure, and/or determine the capabilities of an external device.

The GMCH has one dedicated display port, the analog port. DVO ports B and C are multiplexed with the AGP interface. When a system utilizes an AGP connector, DVO ports B and C can be utilized via an ADD (AGP Digital Display) card. Ports B and C can also operate in dual channel mode, where the data bus is connected to both display ports, allowing a single device to take data at twice the pixel rate.

The GMCH's analog port uses an integrated 350 MHz RAMDAC that can directly drive a standard progressive scan analog monitor up to a resolution of 2048x1536 pixels with 32-bit color at 60 Hz.

The GMCH's DVO ports are each capable of driving a 165 MHz pixel clock. Each port is capable of driving a digital display up to 1600x1200 at 60 Hz. When in dual-channel mode, the GMCH can drive a flat panel up to 2048x1536 at 60 Hz or dCRT/HDTV up to 1920x1080 at 85 Hz.

The GMCH is compliant with *Digital Visual Interface (DVI) Specification, Revision 1.0*. When combined with a DVI compliant external device and connector, the GMCH has a high-speed interface to a digital display (e.g., flat panel or digital CRT).

Table 4-9. Display Port Characteristics

Interface Protocol		Analog	Digital Port B	Digital Port C
		RGB DAC	Intel® DVO 2.0	DVO 2.0
SIGNALS	HSYNC	Yes Enable/Polarity		
	VSYNC	Yes Enable/Polarity		
	BLANK	No	Yes(1)	Yes(1)
	STALL	No	Yes	Yes
	Field	No	Yes	Yes
	Display_Enable	No		Yes(1)
Image Aspect Ratio		Programmable and typically 1.33:1 or 1.78:1		
Pixel Aspect Ratio		Square(1)		
Voltage		RGB 0.7 V p-p	1.5 V	1.5 V
Clock		NA	Differential	
Max Rate		350 Mpixel	165/330 Mpixel	
Format		Analog RGB	RGB 8:8:8 YUV 4:4:4	
Control Bus		DDC1/DDC2B	DDC2B	
External Device		No	TMDS/LVDS Transmitter /TV Encoder	
Connector		VGA/DVI-I	DVI/CVBS/S-Video/Component/SCART	
Special Functions		Monitor Sense	Dual Channel Mode	

NOTE:
1. Single signal software selectable between display enable and Blank#.

4.5.1 Analog Display Port Characteristics

The analog display port provides a RGB signal output along with a HSYNC and VSYNC signal. There is an associated DDC signal pair that is implemented using GPIO pins dedicated to the analog port. The intended target device is for a CRT-based monitor with a VGA connector. Display devices such as LCD panels with analog inputs may work satisfactory but no functionality has been added to the signals to enhance that capability.

Table 4-10. Analog Port Characteristics

Signal	Port Characteristic	Support
RGB	Voltage Range	0.7 V p-p only
	Monitor Sense	Analog Compare
	Analog Copy Protection	No
	Sync on Green	No
HSYNC VSYNC	Voltage	LVTTL
	Enable/Disable	Port control
	Polarity adjust	VGA or port control
	Composite Sync Support	No
	Special Flat Panel Sync	No
	Stereo Sync	No
DDC	Voltage	3.3 V – may need to be externally buffered to 5 V
	Control	Through GPIO interface

Integrated RAMDAC

The display function contains a RAM-based Digital-to-Analog Converter (RAMDAC) that transforms the digital data from the graphics and video subsystems to analog data for the CRT monitor. The GMCH's integrated 350 MHz RAMDAC supports resolutions up to 1920x1080 at 85 Hz and 2048x1536 at 60 Hz. Three 8-bit DACs provide the R, G, and B signals to the monitor.

Sync Signals

The HSYNC and VSYNC signals are digital and conform to TTL signal levels at the connector. Since the GMCH has 3.3 V buffers for these signals, external level shifting may be required. These signals can be polarity adjusted and individually disabled in one of the two possible states. The sync signals should power up disabled in the high state. No composite sync or special flat panel sync support is included.

VESA/VGA Mode

VESA/VGA mode provides compatibility for pre-existing software that sets the display mode using the VGA CRTC registers. Timings are generated based on the VGA register values and the timing generator registers are not used.

DDC (Display Data Channel)

DDC is a standard defined by VESA. Its purpose is to allow communication between the host system and display. Both configuration and control information can be exchanged allowing plug-and-play systems to be realized. Support for DDC 1 and 2 is implemented. The GMCH uses the DDCA_Clk and Data to communicate with the analog monitor.

4.5.2 Digital Display Interface

The GMCH has several options for driving digital displays. The GMCH contains two DVO ports that are multiplexed on the AGP interface. When an external AGP graphics accelerator is not present, the GMCH can use the multiplexed DVO ports to provide extra digital display options. These additional digital display capabilities may be provided through an ADD card, which is designed to plug in to a 1.5 V AGP connector.

4.5.2.1 Digital Display Channels – DVOB and DVOC

The shared DVO ports each support a pixel clock up to 165 MHz and can support a variety of transmission devices. When using a 24-bit external transmitter, it will be possible to pair the two DVO ports in dual-channel mode to support a single digital display with higher resolutions and refresh rates. In this mode, the GMCH is capable of driving pixel clock up to 330 MHz.

The GMCH multiplexes an ADD_DETECT signal with the GPAR signal on the AGP bus. This signal acts as a strap and indicates whether the interface is in AGP or DVO mode. The GMCH has an internal pull-up on this signal that pulls it high. If an ADD card is present, the signal is pulled low on the ADD card and the GMCH operates in DVO mode. Motherboards that do not use an AGP connector should have a pull-down resistor on ADD_DETECT if digital display devices are connected to the AGP/DVO interface.

ADD Card

When an 845G chipset utilizes an AGP connector, the multiplexed DVO ports can be used via an ADD card. The ADD card fits in a 1.5 V AGP connector.

TMDS Capabilities

The GMCH is compliant with *Digital Visual Interface (DVI) Specification, Revision 1.0*. When combined with a DVI compliant external device and connector, the GMCH has a high-speed interface to a digital display (e.g., flat panel or digital CRT). When combining the two multiplexed DVO ports, the GMCH can drive a flat panel up to 2048x1536 at 60 Hz or a dCRT/HDTV up to 1920x1080 at 85 Hz. Flat Panel is a fixed resolution display. While the GMCH has no native panel fitting capabilities, it supports panel fitting in the transmitter, receiver, or an external device. The GMCH, however, provides unscaled mode where the display is centered on the panel.

LVDS Capabilities

The GMCH can use the multiplexed DVO ports to drive an LVDS transmitter. A Flat Panel is a fixed resolution display. While the GMCH has no native panel fitting capabilities, it supports panel fitting in the transmitter, receiver, or an external device. The GMCH provides unscaled mode where the display is centered on the panel. The GMCH supports scaling in the LVDS transmitter through the DVOB (or DVOC)_STL pin, multiplexed with DVOB (or DVOC)_FLD.

TV-Out Capabilities

While traditional TVs are not digital displays, the GMCH uses a digital display channel to communicate with a TV-Out transmitter. For that reason, the GMCH considers a TV-Output to be a digital display. The GMCH supports NTSC/PAL/SECAM standard definition formats. The GMCH generates the proper timing for the external encoder. The external encoder is responsible for generation of the proper format signal. Since the multiplexed DVO interface is 1.5 V, care should be taken to ensure that the TV encoder is operational at that signaling voltage.

A NTSC/PAL/SECAM display on the TV-Out port can be configured to be the boot device. It is necessary to ensure that appropriate BIOS support is provided.

The TV-Out interface on the GMCH is addressable as a master device. This allows an external TV encoder device to drive a pixel clock signal on DVOBC_CLKINT# that the GMCH uses as a reference frequency. The frequency of this clock is dependent on the output resolution required. Data is driven to the encoder across 12 data lines, along with a clock pair and sync signals. The encoder can expect a continuous flow of data from the GMCH because data will not be throttled.

Flicker Filter and Overscan Compensation

The overscan compensation scaling and the flicker filter is done in the external TV encoder chip. Care must be taken to allow for support of TV sets with high performance de-interlacers and progressive scan displays connected to by way of a non-interlaced signal. Timing is generated with pixel granularity to allow more overscan ratios to be supported.

Direct YUV from Overlay

When source material is in the YUV format and is destined for a device that can take YUV format data in, it is desired to send the data without converting it to RGB. This avoids the truncation errors associated with multiple color conversion steps. The common situation is that the overlay source data is in the YUV format and bypasses the conversion to RBG as it is sent to the TV port directly.

Sync Lock Support

Sync lock to the TV is done using the external encoder’s PLL combined with the display phase detector mechanism. The availability of this feature is determined by which external encoder is in use.

Analog Content Protection

Analog content protection is provided through the external encoder using Macrovision 7.01. DVD software must verify the presence of a Macrovision TV encoder before playback continues. Simple attempts to disable the Macrovision operation must be detected.

Connectors

Target TV connector support includes the CVBS, S-Video, Component, and SCART connectors. The external TV encoder in use determines the method of support.

DDC (Display Data Channel)

The multiplexed digital display interface uses the MDVI_CLK and MDVI_DATA signals to interrogate the panel. The GMCH supports the DDC2B protocol to initiate the transfer of EDID data. The multiplexed digital display interface uses the M_I2C bus to interrogate the external transmitter.

Optional High Speed (Dual-Channel) Interface

The multiplexed digital display ports can operate in a single 24-bit mode. The 24-bit mode uses the 12-bit DVOC data pins combined with the DVOB data pins to make a 24-bit bus. This doubles the transfer rate capabilities of the port. In the single port case, horizontal periods have a granularity of a single pixel clock; in the double case, horizontal periods have a granularity of two pixel clocks. In both cases, data is transferred on both edges of the differential clock. The GMCH can output the data in a high-low fashion, with the lower 12 bits of the pixel on one DVO port and the upper 12 bits of data on the other DVO port. In this manner, the GMCH transfers an entire pixel per clock edge (2 pixels per clock). In addition to this, the GMCH also can transfer dual-channel data in odd-even format. In this mode, the GMCH transfers all odd pixels on DVOC and all even pixels on DVOB. In this format, each DVO port sees both the high and low half of the pixel, but only sees half of the pixels transferred. As in high-low mode, two full pixels are transferred per clock period. The high-low ordering within each pixel can be modified through DVO control registers.

Intel® DVO Modes

In single channel mode, the order of pixel transmission (high-low vs. low-high) can be adjusted via the data ordering bit of that DVO port's control register. As mentioned above, when in dual - channel mode, the GMCH can transmit data in a high-low or odd-even format. In high-low mode, software can choose which half goes to which port. A 0 = DVOB Lo/DVOC Hi, and a 1 = DVOB Hi/ DVOC Lo. In odd/even mode, the odd pixels will always go out to DVOC and even pixels will always go out to DVOB. Which DVO port is even and which is odd **cannot** be switched, but the data order bit can be used to change the active data order within the even and odd pixels. The GMCH considers the first pixel to be pixel zero and sends it out to DVOB.

4.5.2.2 Synchronous Display

Microsoft Windows* 98 and Windows* 2000 have enabled support for multi-monitor display. Synchronous mode will display the same information on multiple displays.

Since the GMCH has several display ports available for its single pipe, it can support synchronous display on two displays, unless one of the displays is a TV. No synchronous display is available when a TV is in use. The GMCH does not support two synchronous digital displays. The GMCH cannot drive multiple displays concurrently (different data or timings). In addition, the GMCH cannot operate in parallel with an external AGP device. The GMCH can, however, work in conjunction with a PCI graphics adapter.

4.6 Power and Thermal Management

4.6.1 Power Management Support Overview

- ACPI Supported
- System States: S0, S1(desktop), S3, S4, S5, C0, C1, C2 (desktop)
- Graphics States: D0, D3
- Monitor States: D0, D1, D2, D3

4.6.2 Processor Power State Control

- C0 (Full On): This is the only state that runs software. All clocks are running, STPCLK# is deasserted and the processor core is active. The processor can service snoops and maintain cache coherency in this state.
- C1 (Auto-Halt): The first level of power reduction occurs when the processor executes an Auto-Halt instruction. This stops the execution of the instruction stream. The processor can service snoops and maintain cache coherency in this state.
- C2 (Stop Grant): The next level of power reduction occurs when the processor is placed into the Stop Grant state by the assertion of STPCLK#. The GMCH supports only the Stop Grant state in C2.

4.6.3 Sleep State Control

- S0 (Awake): In this state all power planes are active.
- S1 (Stop Grant): S1 state is the same as C2 state (Stop Grant).
- S3 (Suspend-To-RAM): The next level of power reduction occurs when the clock synthesizer and main power planes (ICH4, GMCH, and the processor) are shut down but the DRAM memory plane and the ICH4 resume well remain active. This is the Suspend-To-RAM (STR) state. All clocks from the synthesizer are shut down during the S3 state.
- S4 (Suspend-To-Disk) and S5 (Soft Off): The next level of power reduction occurs when the memory power is shut down in addition to the clock synthesizer, ICH4, GMCH, and the processor power planes. The ICH4 resume well is still powered.
- G3 (Mechanical Off): In this state only the RTC well is powered. The system can only reactivate when the power switch is returned to the “on” position.

4.6.4 Graphics Adapter State Control

- D0 (Active): In this state, power planes are normal and active. This is the normal on state for the GMCH graphics functions. The GMCH graphics functions enter this state out of power-on-reset.
- D3 (Inactive): The D3 power state is the lowest power mode. Displays are off, and the registers and memory need not be maintained. HSYNC and VSYNC are not pulsed in this state.

4.6.5 Monitor State Control

- D0 (On): In this state, both HSYNC and VSYNC are pulsed.
- D1 (Standby): The D1 monitor state is the standby mode. VSYNC is pulsed.
- D2 (Suspend): The D2 monitor state is the suspend mode. HSYNC is pulsed.
- D3 (Off): The D3 power state is the off mode. HSYNC and VSYNC are not pulsed in this state.

4.7 Clocking

Figure 4-2 shows a block diagram of an 845G chipset-based system. The GMCH has the following clocks:

- 100/133 MHz, Spread spectrum, Low voltage (0.7 V) Differential HCLKP/HCLKN for PSB
- 66.667 MHz, Spread spectrum, 3.3 V GCLKIN for hub interface and AGP
- 48 MHz, Non-Spread spectrum, 3.3 V DREFCLK for the Display frequency syntheses
- Up to 85 MHz, 1.5 V DVOBC_CLKINT for TV-Out mode

The GMCH has inputs for a low voltage, differential pair of clocks called HCLKP and HCLKN. These pins receive a host clock from the external clock synthesizer. This clock is used by the host interface and system memory logic. The graphics engine also uses this clock.

The graphics core and display interfaces are asynchronous to the rest of the GMCH. The Graphics core runs at 200 MHz. The display PLL uses the Non-Spread Spectrum 48 MHz input to generate a frequency range of 12 MHz–350 MHz.

Figure 4-2. Intel® 845G Chipset-Based System Clocking Diagram

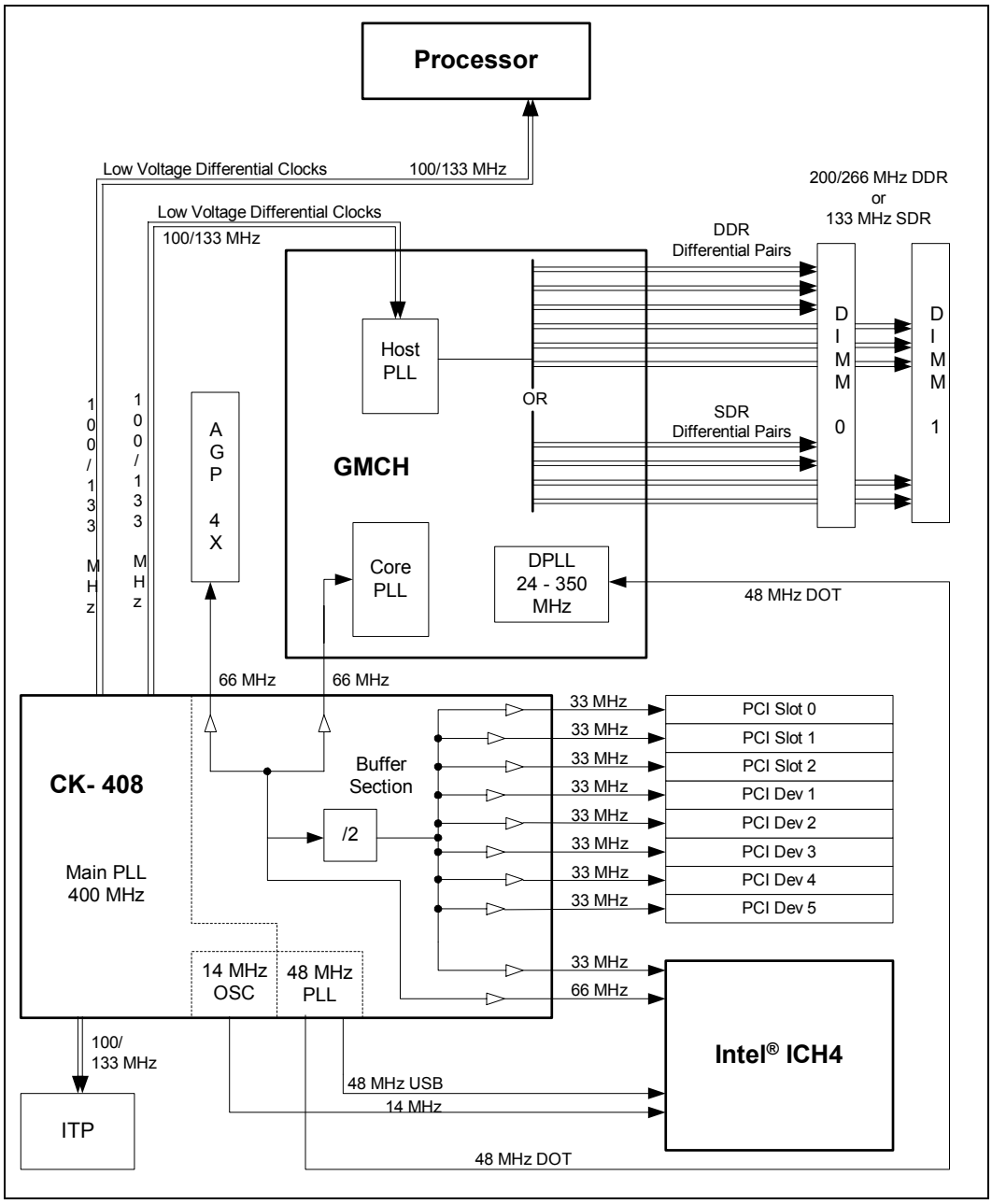

System Address 5

An mPGA478 processor system based on the GMCH supports 4 GB of addressable memory space and 64 KB+3 of addressable I/O space. There is a programmable memory address space under the 1-MB region that is divided into regions which can be individually controlled with programmable attributes (e.g., disable, read/write, write only, or read only). Attribute programming is described in Chapter 3. This section focuses on how the memory space is partitioned and what the separate memory regions are used for. I/O address space has simpler mapping and is explained at the end of this section.

The mPGA478 processor family supports addressing of memory ranges larger than 4 GB. The GMCH claims any processor access over 4 GB and terminates the transaction without forwarding it to the hub interface or AGP. Simply dropping the data terminates writes. For reads, the GMCH returns all zeros on the host bus. Note that the 845G chipset does not support the PCI Dual Address Cycle Mechanism; therefore, the GMCH does not allow addressing of greater than 4 GB on either the hub interface or AGP interface.

In the following sections, it is assumed that all of the compatibility memory ranges reside on the hub interface/PCI. The exception to this rule is VGA ranges, which may be mapped to AGP or to the IGD. In the absence of more specific references, cycle descriptions referencing PCI should be interpreted as the hub interface/PCI, while cycle descriptions referencing AGP are related to the AGP bus. The 845G chipset memory address map includes a number of programmable ranges.

Warning: **All** of these ranges **must** be unique and **non-overlapping**. There are **no** hardware interlocks to prevent problems in the case of overlapping ranges. Accesses to overlapped ranges may produce indeterminate results.

5.1 System Memory Address Ranges

The GMCH provides a maximum SDRAM address decode space of 2 GB. The GMCH does not remap APIC memory space. The GMCH does not limit SDRAM space in hardware.

Note: It is the BIOS or system designers' responsibility to limit memory population so that adequate PCI, AGP, High BIOS, and APIC memory space can be allocated.

Figure 5-1 shows the system memory address map in a simplified form. Figure 5-2 provides additional details on mapping specific memory regions as defined and supported by the GMCH.

Figure 5-1. Memory System Address Map

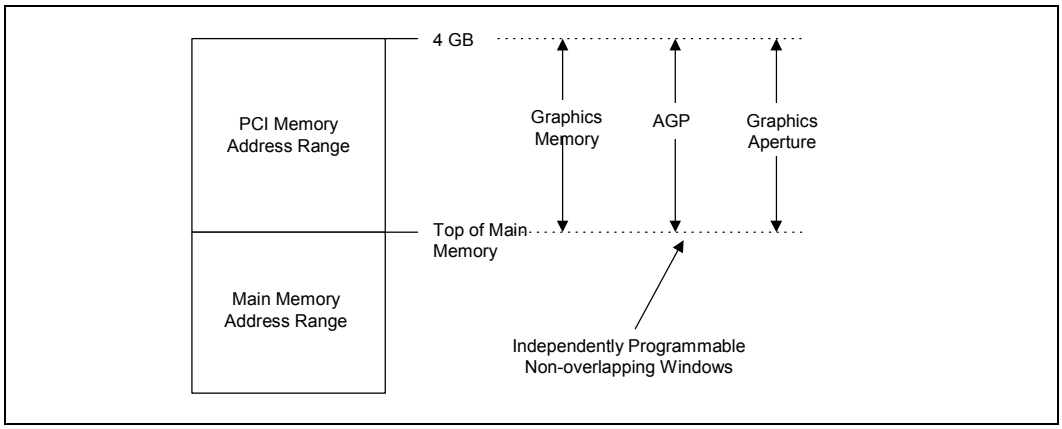

Figure 5-2. Detailed Memory System Address Map

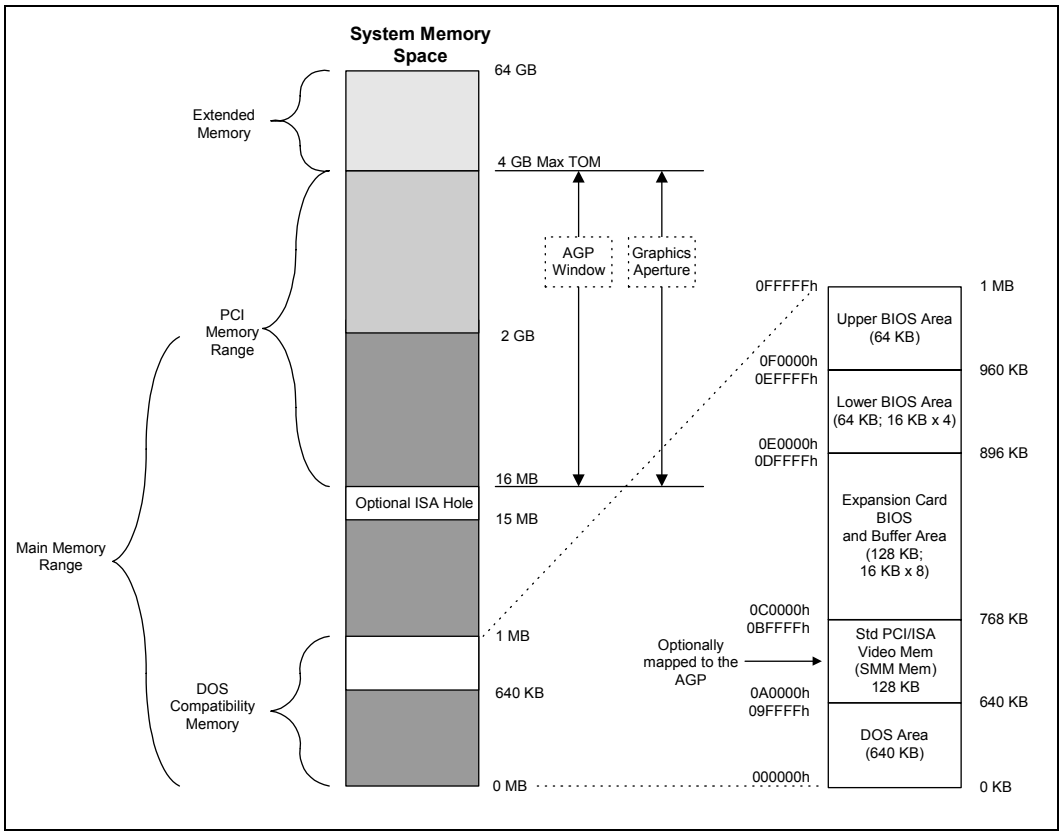

5.1.1 Compatibility Area

This area is divided into the following address regions:

- 0 – 640 KB DOS Area
- 640 – 768 KB Video Buffer Area
- 768 – 896 KB in 16-KB sections (total of 8 sections) - Expansion Area
- 896 – 960 KB in 16-KB sections (total of 4 sections) - Extended System BIOS Area
- 960 KB – 1 MB Memory (BIOS Area) - System BIOS Area

There are fifteen memory segments in the compatibility area. Thirteen of the memory ranges can be enabled or disabled independently for both read and write cycles.

Table 5-1. Memory Segments and Their Attributes

Memory Segments	Attributes	Comments
000000h–09FFFFh	fixed - always mapped to main SDRAM	0 to 640K – DOS Region
0A0000h–0BFFFFh	mapped to Hub Interface, AGP, or IGD - configurable as SMM space	Video Buffer (physical SDRAM configurable as SMM space)
0C0000h–0C3FFFh	WE, RE	Add-on BIOS
0C4000h–0C7FFFh	WE, RE	Add-on BIOS
0C8000h–0CBFFFh	WE, RE	Add-on BIOS
0CC000h–0CFFFFh	WE, RE	Add-on BIOS
0D0000h–0D3FFFh	WE, RE	Add-on BIOS
0D4000h–0D7FFFh	WE, RE	Add-on BIOS
0D8000h–0DBFFFh	WE, RE	Add-on BIOS
0DC000h–0DFFFFh	WE, RE	Add-on BIOS
0E0000h–0E3FFFh	WE, RE	BIOS Extension
0E4000h–0E7FFFh	WE, RE	BIOS Extension
0E8000h–0EBFFFh	WE, RE	BIOS Extension
0EC000h–0EFFFFh	WE, RE	BIOS Extension
0F0000h–0FFFFFh	WE, RE	BIOS Area

DOS Area (00000h–9FFFFh)

The DOS area is 640 KB in size and is always mapped to the main memory controlled by the GMCH.

Legacy VGA Ranges (A0000h–BFFFFh)

The legacy 128-KB VGA memory range A0000h–BFFFFh (Frame Buffer) can be mapped to IGD (Device 2), to AGP/PCI_B (Device 1), and/or to the Hub Interface depending on the programming of the VGA steering bits. Priority for VGA mapping is constant in that the GMCH always decodes internally mapped devices first. Internal to the GMCH, decode precedence is given to IGD. The GMCH always positively decodes internally mapped devices (IGD and AGP/PCI_B). Subsequent decoding of regions mapped to AGP/PCI_B or the hub interface depends on the Legacy VGA configurations bits (VGA Enable and MDAP). This region is also the default for SMM space.

Compatible SMRAM Address Range (A0000h–BFFFFh)

When compatible SMM space is enabled, SMM-mode processor accesses to this range are routed to physical system SDRAM at this address. Non-SMM-mode processor accesses to this range are considered to be to the Video Buffer Area as described above. AGP and hub interface originated cycles to enabled SMM space are not allowed and are considered to be to the Video Buffer Area.

Monochrome Adapter (MDA) Range (B0000h–B7FFFh)

Legacy support requires the ability to have a second graphics controller (monochrome) in the system. Accesses in the standard VGA range are forwarded to IGD, AGP/PCI_B, and the hub interface (depending on configuration bits). Since the monochrome adapter may be mapped to any one of these devices, the GMCH must decode cycles in the MDA range and forward them either to IGD, AGP/PCI_B, or the hub interface. This capability is controlled by a VGA steering bits and the legacy configuration bit (MDAP bit). In addition to the memory range B0000h to B7FFFh, the GMCH decodes I/O cycles at 3B4h, 3B5h, 3B8h, 3B9h, 3BAh and 3BFh and forwards them to the either the IGD, AGP/PCI_B, and/or the hub interface.

Expansion Area (C0000h–DFFFFh)

This 128-KB ISA Expansion region is divided into eight, 16-KB segments. Each segment can be assigned one of four read/write states: read-only, write-only, read/write, or disabled. Typically, these blocks are mapped through GMCH and are subtractively decoded to ISA space. Memory that is disabled is not remapped.

Extended System BIOS Area (E0000h–EFFFFh)

This 64-KB area is divided into four, 16-KB segments. Each segment can be assigned independent read and write attributes so it can be mapped either to main SDRAM or to the hub interface. Typically, this area is used for RAM or ROM. Memory segments that are disabled are not remapped elsewhere.

System BIOS Area (F0000h–FFFFFh)

This area is a single, 64-KB segment. This segment can be assigned read and write attributes. It is by default (after reset) read/write disabled and cycles are forwarded to the hub interface. By manipulating the read/write attributes, the GMCH can “shadow” BIOS into the main SDRAM. When disabled, this segment is not remapped.

5.1.2 Extended Memory Area

This memory area covers 100000h (1 MB) to FFFFFFFFh (4 GB–1 Byte) address range and it is divided into the following regions:

- Main System SDRAM Memory from 1 MB to the Top of Memory; maximum of 2 GB SDRAM.
- AGP or PCI Memory space from the Top of Memory to 4 GB with two specific ranges:
- APIC Configuration Space from FEC0_0000h (4 GB–20 MB) to FECF_FFFFh and FEE0_0000h to FEEF_FFFFh
- High BIOS area from 4 GB to 4 GB – 2 MB

Main System SDRAM Address Range (0010_0000h to Top of Main Memory)

The address range from 1 MB to the top of main memory is mapped to main SDRAM address range controlled by the GMCH. The Top of Memory (TOM) is limited to 2 GB SDRAM. All accesses to addresses within this range will be forwarded by the GMCH to the SDRAM unless a hole in this range is created using the fixed hole as controlled by the FDHC register. Accesses within this hole are forwarded to the hub interface.

The GMCH provides a maximum SDRAM address decode space of 4 GB. The GMCH does not remap APIC memory space. The GMCH does not limit SDRAM address space in hardware.

5.1.2.1 15 MB–16 MB Window

A hole can be created at 15 MB–16 MB as controlled by the fixed hole enable (FDHC register) in Device 0 space. Accesses within this hole are forwarded to the hub interface. The range of physical SDRAM memory disabled by opening the hole is not remapped to the Top of the Memory – that physical SDRAM space is not accessible. This 15 MB–16 MB hole is an optionally enabled ISA hole. Video accelerators originally used this hole. It is also used by validation and customer SV teams for some of their test cards. That is why it is being supported. There is no inherent BIOS request for the 15 MB–16 MB hole.

5.1.2.2 Pre-Allocated Memory

Voids of physical addresses that are not accessible as general system memory and reside within system memory address range (< TOM) are created for SMM-mode and legacy VGA graphics compatibility. For VGA graphics compatibility, pre-allocated memory is only required in non-local memory configurations.

Note: It is the responsibility of BIOS to properly initialize these regions.

Table 5-2 details the location and attributes of the regions. Enabling/disabling these ranges are described in the GMCH Control Register Device 0 (GC).

Table 5-2. Pre-allocated Memory

Memory Segments	Attributes	Comments
00000000h–03E7FFFFh	R/W	Available System Memory 62.5 MB
03E80000h–03F7FFFFh	R/W	Pre-allocated Graphics VGA memory. 1 MB (or 512 K or 8 MB) when IGD is enabled.
03F80000h–03FFFFFFh	SMM Mode Only - processor reads	TSEG Address Range
03F80000h–03FFFFFFh	SMM Mode Only - processor reads	TSEG Pre-allocated Memory

Extended SMRAM Address Range (HSEG and TSEG)

The HSEG and TSEG SMM transaction address spaces reside in this extended memory area.

HSEG

SMM-mode processor accesses to enabled HSEG are remapped to 000A0000h–000BFFFFh. Non-SMM-mode processor accesses to enabled HSEG are considered invalid are terminated immediately on the PSB. The exceptions to this rule are Non-SMM-mode Write Back cycles that are remapped to SMM space to maintain cache coherency. AGP and hub interface-originated cycles to enabled SMM space are not allowed. Physical SDRAM behind the HSEG transaction address is not remapped and is not accessible.

TSEG

TSEG can be up to 1 MB in size and is at the top of physical memory. SMM-mode processor accesses to enabled TSEG access the physical SDRAM at the same address. Non-SMM-mode processor accesses to enabled TSEG are considered invalid and are terminated immediately on the PSB. The exceptions to this rule are Non-SMM-mode Write Back cycles that are directed to the physical SMM space to maintain cache coherency. AGP and hub interface-originated cycles to enabled SMM space are not allowed.

The size of the SMRAM space is determined by the USMM value in the SMRAM register. When the extended SMRAM space is enabled, non-SMM processor accesses and all other accesses in this range are forwarded to the hub interface. When SMM is enabled, the amount of memory available to the system is equal to the amount of physical SDRAM minus the value in the TSEG register.

PCI Memory Address Range (Top of Main Memory to 4 GB)

The address range from the top of main SDRAM to 4 GB (top of physical memory space supported by the GMCH) is normally mapped via the hub interface to PCI.

As an internal graphics configuration, there are two exceptions to this rule:

- Addresses decoded to graphics configuration registers.
- Addresses decoded to the Memory Mapped Range of the Internal Graphics Device.

Both exception cases are forwarded to the Internal Graphics Device.

As an AGP configuration, there are two exceptions to this rule:

- Addresses decoded to the AGP Memory Window defined by the MBASE, MLIMIT, PMBASE, and PMLIMIT registers are mapped to AGP.
- Addresses decoded to the Graphics Aperture range defined by the APBASE and APSIZE registers are mapped to the main SDRAM.

Warning: There are two sub-ranges within the PCI memory address range defined as APIC configuration space and High BIOS address range. As an Internal Graphics Device, the memory-mapped range of the Internal Graphics Device **must not** overlap with these two ranges. Similarly, as an AGP device, the AGP memory window and graphics aperture window **must not** overlap with these two ranges. These ranges are described in detail in the following paragraphs.

APIC Configuration Space (FEC0_0000h–FECF_FFFFh, FEE0_0000h–FEEF_FFFFh)

This range is reserved for APIC configuration space which includes the default I/O APIC configuration space. The default local APIC configuration space is FEE0_0000h to FEEF_0FFFh.

Processor accesses to the local APIC configuration space do not result in external bus activity since the local APIC configuration space is internal to the processor. However, an MTRR must be programmed to make the local APIC range uncacheable (UC). The local APIC base address in each processor should be relocated to the FEC0_0000h (4GB-20MB) to FECF_FFFFh range so that one MTRR can be programmed to 64 KB for the Local and I/O APICs. The I/O APIC(s) usually reside in the ICH4 portion of the chipset or as a stand-alone component(s).

I/O APIC units will be located beginning at the default address FEC0_0000h. The first I/O APIC will be located at FEC0_0000h. Each I/O APIC unit is located at FEC0_x000h where *x* is I/O APIC unit number 0 through F(hex). This address range will be normally mapped to Hub Interface.

Note: There is no provision to support an I/O APIC device on AGP.

The address range between the APIC configuration space and the High BIOS (FED0_0000h to FFDF_FFFFh) is always mapped to the hub interface.

High BIOS Area (FFE0_0000h–FFFF_FFFFh)

The top 2 MB of the extended memory region is reserved for system BIOS (High BIOS), extended BIOS for PCI devices, and the A20 alias of the system BIOS. The processor begins execution from the High BIOS after reset. This region is mapped to the hub interface so that the upper subset of this region aliases to 16 MB–256 KB range. The actual address space required for the BIOS is less than 2 MB but the minimum processor MTRR range for this region is 2 MB so that the full 2 MB must be considered.

5.1.3 AGP Memory Address Ranges

The GMCH can be programmed to direct memory accesses to the AGP bus interface when addresses are within either of two ranges specified via registers in the GMCH's Device 1 configuration space. The first range is controlled via the Memory Base Register (MBASE) and Memory Limit Register (MLIMIT) registers. The second range is controlled via the Prefetchable Memory Base (PMBASE) and Prefetchable Memory Limit (PMLIMIT) registers.

Conceptually, address decoding for each range follows the same basic concept. The top 12 bits of the respective Memory Base and Memory Limit registers correspond to address bits A[31:20] of a memory address. For the purpose of address decoding, the GMCH assumes that address bits A[19:0] of the memory base are zero and that address bits A[19:0] of the memory limit address are FFFFFh. This forces each memory address range to be aligned to 1-MB boundary and to have a size granularity of 1 MB.

The GMCH positively decodes memory accesses to AGP memory address space as defined by the following equations:

- Memory_Base_Address ≤ Address ≤ Memory_Limit_Address
- Prefetchable_Memory_Base_Address ≤ Address ≤ Prefetchable_Memory_Limit_Address

The window size is programmed by the plug-and-play configuration software. The window size depends on the size of memory claimed by the AGP device. Normally these ranges will reside above the Top-of-Main-DRAM and below High BIOS and APIC address ranges. They normally reside above the top of memory (TOM) so they do not steal any physical SDRAM memory space.

It is essential to support a separate Prefetchable range to apply the USWC attribute (from the processor point of view) to that range. The USWC attribute is used by the processor for write combining.

Note that the GMCH Device 1 memory range registers described above are used to allocate memory address space for any devices sitting on AGP that require such a window. These devices would include the AGP device, PCI-66 MHz/1.5 V agents, and multifunctional AGP devices where one or more functions are implemented as PCI devices.

The PCICMD1 register can override the routing of memory accesses to AGP. In other words, the Memory Access Enable bit must be set in the Device 1 PCICMD1 register to enable the memory base/limit and prefetchable base/limit windows.

Electrical Characteristics 6

This chapter contains the thermal characteristics, power characteristics and DC characteristics for the GMCH component.

Note: SDR signals are multiplexed with DDR signals. The specific signal's timing and voltage level is dependent on the 845G GMCH memory mode selected. This document differentiates the two by following each signal with either SDR or DDR, as appropriate.

6.1 Absolute Maximum Ratings

Table 6-1 lists the GMCH's maximum environmental stress ratings. Functional operation at the absolute maximum and minimum is neither implied nor guaranteed. Functional operating parameters are listed in the DC characteristics tables.

Warning: Stressing the device beyond the "Absolute Maximum Ratings" may cause permanent damage. These are stress ratings only. Operating beyond the "operating conditions" is not recommended and extended exposure beyond "operating conditions" may affect reliability.

Table 6-1. Absolute Maximum Ratings

Symbol	Parameter	Min	Max	Unit
T_{die}	Die Temperature under Bias	0	97	°C
$T_{storage}$	Storage Temperature	-55	150	°C
VCC1_5	1.5 V Supply Voltage with respect to VSS	-0.3	1.75	V
VTT	AGTL+ buffer DC input voltage with respect to VSS	-0.3	1.75	V
VCCSM(DDR)	2.5 V DDR Supply Voltage with respect to VSS	-0.5	3	V
VCCSM(SDR)	3.3 V Supply Voltage with respect to VSS	-0.3	3.6	V

6.2 Thermal Characteristics

The GMCH is designed for operation at die temperatures between 0 °C and 97 °C. The thermal resistance of the package is given in Table 6-2. See the *Intel® 845G/845G*L /845GV *Chipset: Intel® 82845G/82845GL Graphics and Memory Controller Hub (GMCH) Thermal and Mechanical Design Guidelines* for more information.

Table 6-2. Intel® 82845G GMCH Package Thermal Resistance

Parameter	Airflow Velocity in Meters/Second	
	No Air Flow	1 m/s
Ψ_{jt} (°C/Watt)**	(see note)	(see note)
Θ_{ja} (°C/Watt)**	(see note)	(see note)

NOTE: Refer to the *Intel® 845G/845GL/845GV Chipset: Intel® 82845G/82845GL/82845GV Graphics and Memory Controller Hub (GMCH) Thermal and Mechanical Design Guidelines* for more information.

6.3 Power Characteristics

Table 6-3. Power Characteristics

Symbol	Parameter	Max	Unit	Notes
$P_{GMCH(DDR)}$	Thermal Design Power		W	1
$P_{GMCH(SDR)}$	Thermal Design Power		W	1
$I_{VCC(DDR)}$	1.5 V Core Supply Current	2.46	A	2
$I_{VCC(SDR)}$	1.5 V Core Supply Current	2.0	A	2
I_{VCCAGP}	1.5 V AGP Supply Current (AGP mode)	0.37	A	2
I_{VCCAGP}	1.5 V AGP Supply Current (DVO mode)	0.18	A	2
I_{VCCHI}	1.5 V Hub Interface Supply Current	90	mA	2
I_{VTTFSB}	GMCH VTT supply Current	2.4	A	
$I_{VCCSM(DDR)}$	DDR System Memory Interface (2.5 V) Supply Current	2.2	A	
$I_{SUS_2.5}$	2.5 V Standby Supply Current	95	mA	
$I_{VCCSM(SDR)}$	SDR System Memory Interface (3.3 V) Supply Current	1.6	A	
$I_{SUS_3.3}$	3.3 V Standby Supply Current	5	mA	

NOTES:
1. See *Intel® 845G/845GL/845GV Chipset: Intel® 82845G/82845GL/82845GV Graphics and Memory Controller Hub (GMCH) Thermal and Mechanical Design Guidelines* for more information.
2. These current levels may happen simultaneously and can be summed into one supply.

6.4 Signal Groups

The signal description includes the type of buffer used for the particular signal (see Table 6-4):

AGTL+	Open Drain AGTL+ interface signal. Refer to the AGTL+ I/O Specification for complete details. The GMCH integrates most AGTL+ termination resistors.
AGP	AGP interface signals. These signals are compatible with *AGP 2.0 1.5 V Signaling Environment DC and AC Specifications*. The buffers are not 3.3 V tolerant. (DVO signals use the same buffers as AGP)
HI CMOS	Hub Interface 1.5 V CMOS buffers.
DDR CMOS	DDR System memory 2.5 V CMOS buffers.
SDR CMOS	SDR System memory 3.3 V CMOS buffers.

Table 6-4. Signal Groups (Sheet 1 of 2)

Signal Group	Signal Type	Signals
AGP Interface Signal Groups		
(a)	AGP I/O	GADSTB_[1:0], GADSTB_[1:0]#, GFRAME#, GIRDY#, GTRDY#, GSTOP#, GDEVSEL#, GAD_[31:0], GC/BE_[3:0]#, GPAR
(b)	AGP Input	GPIPE#, GSBA_[7:0], GRBF#, GWBF#, GSBSTB, GSBSTB#, GREQ#
(c)	AGP Output	GST_[2:0], GGNT#
(d)	AGP Miscellaneous	AGP_VREF, AGP_RCOMP

Table 6-4. Signal Groups (Sheet 2 of 2)

Signal Group	Signal Type	Signals
Hub Interface Signal Groups		
(e)	Hub Interface CMOS I/O	HI_[10:0], HISTBS, HISTBF
(f)	Hub Interface Miscellaneous	HI_SWING, HI_VREF, HI_RCOMP
Host Interface Signal Groups		
(g)	AGTL+ I/O	ADS#, BNR#, DBSY#, DINV_[3:0]#, DRDY#, HA_[31:3]#, HADSTB_[1:0]#, HD_[63:0]#,HDSTBP_[3:0]#, HDSTBN_[3:0]#, HIT#, HITM#, HREQ_[4:0]#
(h)	AGTL+ Input	HLOCK#
(i)	AGTL+ Output	BPRI#, BREQ0#, CPURST#, DEFER#, HTRDY#, RS_[2:0]#
(j)	Host Clock Input	HCLKP, HCLKN
(k)	Host Miscellaneous	HDVREF_[2:0], HA_VREF, HCC_VREF, HX_RCOMP, HY_RCOMP, HX_SWING, HY_SWING
DDR Interface Signal Groups		
(l)	DDR SSTL_2 I/O	SDQ_[63:0], SDQS_[7:0]
(m)	DDR SSTL_2 Output	SDM_[7:0], SCMDCLK_[5:0], SCMDCLK_[5:0]#, SMAA_[12:0], SMAB_[5,4,2,1], SBA_[1:0], SRAS#, SCAS#, SWE#, SCS_[3:0]#, SCKE_[3:0], SRCVEN_OUT#
(n)	DDR SSTL_2 Input	SRCVEN_IN#
(o)	DDR Miscellaneous	SMXRCOMP, SMYRCOMP, SM_VREF
SDR Interface Signal Groups		
(p)	SDRAM LVTTL I/O	SDQ_[63:0]
(q)	SDRAM LVTTL Output	SDM_[7:0], SMAA_[12:0], SBA_[1:0], SRAS#, SCAS#, SWE#, SCS[7:0]#, SCK_[7:0], SCKE_[3:0], SRDCLK_OUT
(r)	SDRAM LVTTL Input	SRDCLK_IN
(s)	SDRAM Miscella-neous	SMXRCOMP, SMYRCOMP, SM_VREF
DAC Signal Groups		
(t)	Display LVTTL Output	VSYNC, HSYNC
(u)	Display Analog Outputs	RED, GREEN, BLUE, RED#, GREEN#, BLUE#
(v)	Display Miscellaneous	REFSET
Intel® DVO Signal Groups		
(w)	DVOx Input	DVOBC_CLKINT, DVOx_FLD/STL, DVOBC_INTR#
(x)	DVOx Output	DVOx_CLK, DVOx_CLK#, DVOx_D[11:0], DVOx_HSYNC, DVOx_VSYNC, DVOx_BLANK#
Reset and Miscellaneous Signal Groups		
(y)	CMOS I/O	GCLKIN, RSTIN#, PWROK, DREFCLK, DDCA_CLK, DDCA_DATA

6.5 DC Parameters

Table 6-5. DC Operating Characteristics

Signal Name	Parameter	Min	Nom	Max	Unit
I/O Buffer Supply Voltage					
VCC	Core Voltage	1.425	1.5	1.575	V
VCCAGP	AGP I/O Voltage	1.425	1.5	1.575	V
VCCHI	Hub Interface I/O Voltage	1.425	1.5	1.575	V
VCCA_DAC	DAC Supply Voltage	1.425	1.5	1.575	V
VTT	Host AGTL+ Termination Voltage	1.15	N/A	1.75	V
VCCSM(DDR)	DDR I/O Supply Voltage	2.375	2.5	2.625	V
VCCSM(SDR)	SDR I/O Supply Voltage	3.135	3.3	3.465	V
Reference Voltages					
AGP_VREF	AGP Reference Voltage	1/2 VCCAGP – 2%	1/2 x VCCAGP	1/2 VCCAGP + 2%	V
HI_VREF	Hub Interface Reference Voltage	0.343	0.35	0.357	V
HI_SWING	Hub Interface Compensation Reference Voltage	0.686	0.7	0.714	V
HA_VREF/ HD_VREF	Host Address and Data Reference Voltage	2/3 x VTT – 2%	2/3 x VTT	2/3 x VTT + 2%	V
HX_SWING/ HY_SWING	Host Compensation Reference Voltage	1/3 x VTT – 2%	1/3 x VTT	1/3 x VTT + 2%	V
HCC_VREF	Host Common Clock Reference Voltage	2/3 x VTT – 2%	2/3 x VTT	2/3 x VTT + 2%	V
SM_VREF (DDR)	DDR Reference Voltage	0.5 VCCSM (DDR) – 2%	1/2 x VCCSM (DDR)	0.5 VCCSM (DDR) + 2%	V
SM_VREF (SDR)	SDR Reference Voltage	0.5 VCCSM (SDR) – 2%	1/2 x VCCSM (SDR)	0.5 VCCSM (SDR) + 2%	V

NOTES:
1. HA_VREF/HD_VREF and HCC_VREF are generically referred to as GTLREF throughout the rest of this document.
2. HI_VREF and HI_SWING are set according to the nominal VCC.
3. The DC specifications are intended solely for DC measurements and do not comprehend any AC noise components.

Table 6-6. DC Characteristics (Sheet 1 of 2)

Symbol	Signal Group	Parameter	Min	Nom	Max	Unit	Notes
1.5 V AGP and Intel® DVO Interface: Functional Operating Range (VCC=1.5 V ± 5%)							
V_{IL_AGP}	(a,b,w)	AGP/DVO Input Low Voltage	–0.5		0.4VDDQ	V	
V_{IH_AGP}	(a,b,w)	AGP/DVO Input High Voltage	0.6VDDQ		VDDQ+0.5	V	
V_{OL_AGP}	(a,c,x)	AGP/DVO Output Low Voltage			0.15VDDQ	V	Iol = 1 mA
V_{OH_AGP}	(a,c,x)	AGP/DVO Output High Voltage	0.85VDDQ			V	Ioh = -0.2 mA
I_{LEAK_AGP}	(a,b,w)	AGP/DVO Input Leakage Current			±10	µA	0<Vin<VCC1_5
C_{IN_AGP}	(a,b,w)	AGP/DVO Input Capacitance			4	pF	F_C=1 MHz
1.5 V Hub Interface: Functional Operating Range (VCC=1.5 V ± 5%)							
V_{IL_HI}	(e)	Hub Interface Input Low Voltage	-0.3		HI_VREF–0.1	V	
V_{IH_HI}	(e)	Hub Interface Input High Voltage	HI_VREF+0.1		1.2	V	
V_{OL_HI}	(e)	Hub Interface Output Low Voltage			0.066	V	I_{OL}= 1 mA
V_{OH_HI}	(e)	Hub Interface Output High Voltage	0.6		1.2	V	I_{OUT}=0.7/RCOMP
I_{LEAK_HI}	(e)	Hub Interface Input Leakage Current			25	µA	
C_{IN_HI}	(e)	Hub Interface Input Capacitance			5	pF	F_C=1 MHz
VTT DC Characteristics: Functional Operating Range (VTT= 1.15 V – 1.75 V)							
V_{IL_AGTL+}	(g,h)	Host AGTL+ Input Low Voltage			(2/3*VTT) – 0.1*GTLREF	V	
V_{IH_AGTL+}	(g,h)	Host AGTL+ Input High Voltage	(2/3*VTT) + 0.1*GTLREF			V	
V_{OL_AGTL+}	(g,l)	Host AGTL+ Output Low Voltage	1/3*VTT–0.1	1/3*VTT	1/3*VTT+0.1	V	
V_{OH_AGTL+}	(g,l)	Host AGTL+ Output High Voltage	VTT–0.1	VTT		V	
I_{OL_AGTL+}	(g,l)	Host AGTL+ Output Low Current			VTT_{max} / $0.75Rtt_{min}$	mA	Rtt_{min}=45 Ω
I_{LEAK_AGTL+}	(g,h)	Host AGTL+ Input Leakage Current			± 10	µA	V_{OL}<Vpad<VTT
C_{PAD_AGTL+}	(g,h)	Host AGTL+ Input Capacitance	1		3.5	pF	F_C=1 MHz
2.5 V DDR System Memory: Functional Operating Range (VCC=2.5 V±5%)							
$V_{IL_DDR(DC)}$	(l,n)	DDR Input Low Voltage	-0.1*VCC		SMVREF (DDR) – 0.15	V	
$V_{IH_DDR(DC)}$	(l,n)	DDR Input High Voltage	SMVREF (DDR) + 0.15		1.1*VCC	V	
$V_{IL_DDR(AC)}$	(l,n)	DDR Input Low Voltage	–0.1*VCC		SMVREF (DDR)–0.31	V	
$V_{IH_DDR(AC)}$	(l,n)	DDR Input High Voltage	SMVREF (DDR) + 0.31		1.1*VCC	V	
V_{OL_DDR}	(l,m)	DDR Output Low Voltage			0.6	V	IOL = 13 mA
V_{OH_DDR}	(l,m)	DDR Output High Voltage	1.9			V	IOH = 13 mA
I_{Leak_DDR}	(l,n)	Input Leakage Current			±10	uA	
C_{IN_DDR}	(l,n)	DDR Input/Output Pin Capacitance			5.5	pF	F_C=1 MHz

Table 6-6. DC Characteristics (Sheet 2 of 2)

Symbol	Signal Group	Parameter	Min	Nom	Max	Unit	Notes
3.3V SDR System Memory: Functional Operating Range (VCC=3.3V±5%)							
V_{IL_SDR}	(p,r)	Input Low Voltage			SMVREF (SDR)–0.350	V	
V_{IH_SDR}	(p,r)	Input High Voltage	SMVREF (SDR)+0.350			V	
V_{OL_SDR}	(p,q)	Output Low Voltage			0.4	V	
V_{OH_SDR}	(p,q)	Output High Voltage	2.4			V	
I_{OL_SDR}	(p,q)	Output Low Current			4	mA	@V_{OL_SDR} max
I_{OH_SDR}	(p,q)	Output High Current	-4			mA	@V_{OH_SDR} max
I_{LEAK_SDR}	(p,r)	Input Leakage Current			±10	µA	0<Vin< VCCSM(SDR)
C_{IN_SDR}	(p,r)	Input Capacitance			5.5	pF	F_C=1 MHz
3.3V Synchronization signals: Functional Operating Range (VCC=3.3V±5%)							
V_{IH}	(t)	Output High Voltage	2.4		3.465	V	
V_{IL}	(t)	Output Low Voltage	0.0		0.5	V	
I_{OH}	(t)	Output High Current	-8			MA	
I_{OL}	(t)	Output Low Current	8			mA	
Clocks and Miscellaneous Signals							
V_{IL}	(y)	3.3 V CMOS Input Low Voltage			0.8	V	
V_{IH}	(y)	3.3 V CMOS Input High Voltage	2.0			V	
V_{OL}	(y)	3.3 V CMOS Output Low Voltage			0.4	V	
V_{OH}	(y)	3.3 V CMOS Output High Voltage	2.4			V	
I_{OL}	(y)	3.3 V CMOS Output Low Current			4	mA	@V_{OL} max
I_{OH}	(y)	3.3 V CMOS Output High Current	-4			mA	@V_{OH} min
I_{LEAK}	(y)	3.3 V CMOS Input Leakage Current			±10	µA	0<Vin<VCC3
C_{IN}	(y)	3.3 V CMOS Input Capacitance			5.5	pF	F_C=1 MHz
$V_{Cross(Abs)}$	(j)	Absolute Crossing Voltage	0.250		0.550	V	1,2,4,5
$V_{Cross(Rel)}$	(j)	Relative Crossing Voltage	Note 5		Note 5	V	1,2,3,4,5

NOTES:
1. Crossing voltage is defined as the instantaneous voltage value when the rising edge of HCLKP equals the falling edge of HCLKN.
2. $V_{IH(Ave)}$ is the statistical average of the V_{IH} measured by the oscilloscope.
3. $V_{IH(Ave)}$ can be measured directly using “Vtop” on Agilent* scopes and “High” on Tektronix* scopes.
4. The crossing point must meet the absolute and relative crossing point specifications simultaneously.
5. $V_{Cross(Rel)}$ Maximum = 0.250+0.5($V_{IH(Ave)}$–0.71); $V_{Cross(Rel)}$ Minimum = 0.550+0.5($V_{IH(Ave)}$–0.71). See Figure 6-1.

Figure 6-1. System Bus HCLKP/N VCROSS Range

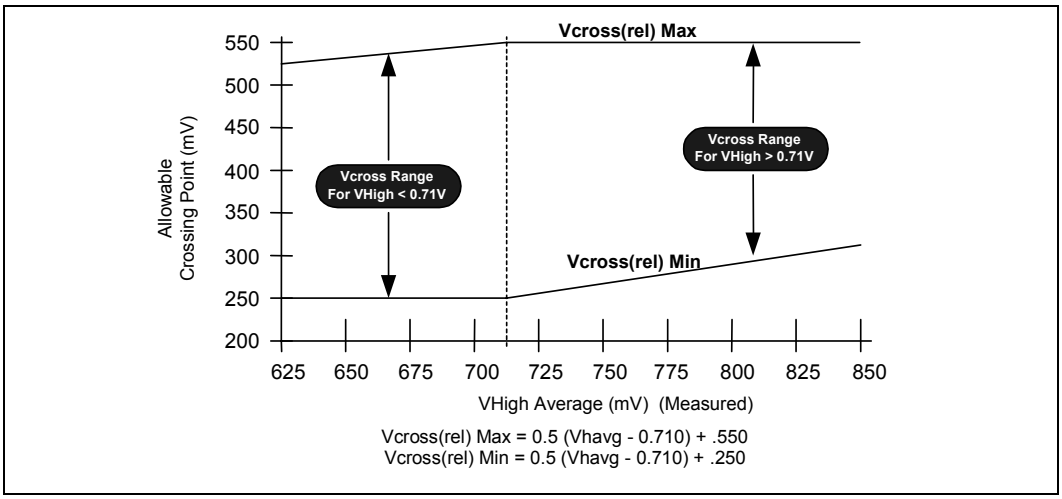

6.6 DAC Characteristics

The GMCH DAC (digital-to-analog converter) consists of three identical 8-bit DACs to provide red, green, and blue color components. Each DAC can output a current from 0 to 255 units of current, where one unit of current (LSB) is defined based on the VESA video signal standard.

6.6.1 DAC DC Characteristics

Table 6-7. DAC DC Characteristics: Functional Operating Range (VCCDAC = 1.5 V ±5%)

Parameter	Min	Typical	Max	Units	Notes
DAC Resolution	8			Bits	Note 1
Max Luminance (full-scale)	0.665	0.700	0.770	V	Notes 1, 2, 4, white video level voltage
Min Luminance		0.000		V	Notes 1, 3, 4, black video level voltage
LSB Current		73.2		µA	Notes 4, 5
Integral Linearity (INL)	–1.0		+1.0	LSB	Notes 1, 6
Differential Linearity (DNL)	–1.0		+1.0	LSB	Notes 1, 6
Video channel-channel voltage amplitude mismatch			6	%	Notes 7
Monotonicity	Guaranteed				

NOTES:
1. Measured at each R,G,B termination according to the VESA Test Procedure – Evaluation of Analog Display Graphics Subsystems Proposal (Version 1, Draft 4, December 1, 2000)
2. Max steady-state amplitude
3. Min steady-state amplitude
4. Defined for a double 75 Ω termination
5. Set by external reference resistor value
6. INL and DNL measured & calculated according to VESA Video Signal Standards
7. Max full-scale voltage difference among R,G,B outputs (percentage of steady-state full-scale voltage)

6.6.2 DAC Reference and Output Specifications

Table 6-8. DAC Reference and Output Specifications

Parameter	Min	Typical	Max	Units	Notes
Reference resistor		137		Ω	1% tolerance, 1/16 W
RED, GREEN, BLUE termination resistor		75		Ω	Note 1, 1% tolerance, 1/16 W
RED#,GREEN#,BLUE# termination resistor		37.5		Ω	Note 2, 1% tolerance, 1/16 W (applies to differential routing)
Video Filter Ferrite Bead		75		Ω	Note 3, @ 100 MHz, (each RED, GREEN, BLUE output)
Video Filter Capacitors		3.3		pF	Note 3, two capacitors per RED, GREEN, BLUE output

NOTES:
1. VESA Video Signal Standard
2. Complement DAC channel output termination resistors are only required for differential video routing to the VGA connector.
3. Video filter capacitors and ferrite bead arranged in a PI configuration (one PI filter for RED, GREEN, BLUE outputs)

6.6.3 DAC AC Characteristics

Table 6-9. DAC AC Characteristics

Parameter	Min	Typical	Max	Units	Notes
Pixel Clock Frequency			350	MHz	
RED, GREEN, BLUE Video Rise Time	0.57		1.43	ns	Notes 1, 2, (10–90% of black-to-white transition, at 350 MHz pixel clock)
RED, GREEN, BLUE Video Fall Time	0.57		1.43	ns	Notes 1, 3, (90–10% of white-to-black transition, at 350 MHz pixel clock)
Settling Time			0.86	ns	Notes 1, 4, at 350 MHz pixel clock
Video channel-to-channel output skew			0.714	ns	Notes 1, 5, at 350 MHz pixel clock
Overshoot/ Undershoot	-0.084		+0.084	V	Notes 1, 6, Full-scale voltage step of 0.7 V
Noise Injection Ratio			0.5	%	Notes 1, 7

NOTES:
1. Measured at each RED, GREEN, BLUE termination according to the VESA Test Procedure – Evaluation of Analog Display Graphics Subsystems Proposal (Version 1, Draft 4, December 1, 2000)
2. R,G,B Max Video Rise/Fall Time: 50% of minimum pixel clock period
3. R,G,B Min Video Rise/Fall Time: 20% of minimum pixel clock period
4. Max settling time: 30% of minimum pixel clock period
5. Video channel-channel output skew: 25% of minimum pixel clock period
6. Overshoot/undershoot: ± 12% of black-white video level (full-scale) step function
7. Noise injection ratio: 0.5% of maximum luminance voltage (dc to max. pixel frequency)

Ballout and Package Information 7

This chapter provides the ballout listing and the package dimensions for the 82845G GMCH.

7.1 Intel® 82845G GMCH Ballout

Figure 7-1 and Figure 7-2 show the 82845G GMCH footprint with the ball names listed for each ball. Table 7-1 lists the ballout organized by ball number. Table 7-2 lists the ballout organized alphabetically by signal name.

The following notes apply to the ballout:

Note: For the multiplexed DDR and SDR interface signals, only the DDR signal names are listed in this chapter. Refer to Section 2.2.2 for the SDR-to-DDR signal mapping.

Note: For the multiplexed AGP and DVO signals, only the AGP signal names are listed in this chapter. Refer to Section 2.5.1 for the DVO-to-AGP signal mapping.

Note: NC = No Connect.

Note: RSVD = These pins should not be connected and should be allowed to float.

Figure 7-1. Intel® 82845G GMCH Ballout Footprint (Top View – Left Side)

	37	36	35	34	33	32	31	30	29	28	27	26	25	24	23	22	21	20	19
AU	NC	NC	VSS		VCCSM		VSS		VCCSM		VSS		VCCSM		VSS		VCCQSM		
AT	NC	VSS	SDQ_55	SDQS_6	SDQ_53	SDQ_49	SDQ_47	SDQ_46	SDQS_5	SDQ_41	SDQ_44	SDQ_35	SDQ_38	SDM4	SDQ_37	SDQ_36	VCCQSM	VCCQSM	SDQ_27
AR	VSS	SDQ_50	VSS	SDM_6	VSS	SDQ_48	VSS	SDQ_42	VSS	SDQ_45	VSS	SDQ_39	VSS	SDQS_4	VSS	SDQ_32	VSS	SDQ_31	VSS
AP		SDQ_60	SDQ_51	SDQ_54	SCMD CLK_5	SDQ_52	SCS_1#	SDQ_43	SWE#	SDM_5	SBA_1	SDQ_40	SMAB_1	SDQ_34	SMAA_2	SDQ_33	SCMD CLK_3	VCCSM	SMAA_6
AN	VSS	SDQ_56	VSS	SCMD CLK_5#	VSS		SCS_3#		SCAS#		SBA_0		SMAA_1		SMAB_2		SCMD CLK_3#		SMAB_4
AM		SDQ_57	SDQ_61	SCMD CLK_2		VSS		VCCSM		VSS		VCCSM		VSS		VCCSM		VSS	
AL	VCCSM	SDQS_7	VSS	SDM_7	SCMD CLK_2#		VSS		SCS_0#		VSS		SMAA_0		SRCVEN _IN#		SCMD CLK_0		SMAA_4
AK		SDQ_58	SDQ_62	SDQ_63		VCCSM		SCS_2#		SRAS#		SMAA_10		SRCVEN _OUT#		SCMD CLK_0#		SMAA_3	
AJ	VSS	SDQ_59	NC	SMY RCOMP	VSS		RSTIN#		VSS		VCCSM		VSS		VCCSM		VSS		VCCSM
AH		VSS	HA_29#	NC		VSS		VSS		VSS		VCCSM		VSS		VCCSM		VSS	
AG	VSS	HA_27#	VSS	HA_26#	HA_30#		HA_31#		VSS										
AF		HA_23#	HA_17#	HA_25#		VSS		HADSTB_ 1#		VSS									
AE	VSS	HA_22#	VSS	HA_20#	HA_24#		HA_28#		VSS										
AD		HA_18#	HA_19#	HA_21#		VSS		HA_VREF		VTTFSB									
AC	VTT_ DECAP	HA_15#	VSS	HA_11#	HA_8#		HA_16#		VSS										
AB		HA_14#	HADSTB_ 0#	HA_12#		VSS		HA_5#		VSS									
AA	VSS	HA_10#	VSS	HREQ_3 #	HA_4#		HREQ_ 1#		VSS								VCC	VSS	VCC
Y		HA_7#	HA_9#	HA_13#		VSS		HY_ SWING		VTTFSB							VSS	VSS	VCC
W		VSS	HREQ_4#	VSS	HREQ_ 2#		HA_3#		VSS								VCC	VCC	VCC
V		HREQ_0#	HY RCOMP	HA_6#		VSS		HTRDY#		VSS							VSS	VSS	VCC
U	VSS	DRDY#	VSS	RS_1#	BREQ0#		DBSY#		VSS								VCC	VSS	VCC
T		ADS#	HLOCK#	BNR#		VSS		HD_0#		VTTFSB									
R	VTT_ DECAP	RS_0#	VSS	HD_2#	HD_1#		HD_4#		VSS										
P		HIT#	HD_7#	RS_2#		VSS		HCC_ VREF		VSS									
N	VSS	DEFER#	VSS	HD_3#	DINV_0#		HDSTB_ N0#		VSS										
M		HITM#	HD_12#	BPRI#		VSS		HD_11#		VTTFSB									
L	VTT_ DECAP	HD_6#	VSS	HD_13#	HD_5#		HDSTB_ P0#		VSS										
K		HD_10#	HD_14#	HD_9#		VSS		HCLKP		VSS		VTTFSB		VSS		VTTFSB		VTTFSB	
J	VSS	HD_8#	VSS	HDSTB_ P1#	HD_18#		HCLKN		VSS		VSS		VSS		VSS		VSS		VTTFSB
H		HD_15#	HD_26#	HD_23#		VSS		HDVREF_ 0		HX_SWI NG		HD_53#		HDVREF _1		VSS		VTTFSB	
G	VTT_ DECAP	HD_17#	VSS	HD_16#	HDSTB_ N1#		HD_30#		HD_40#		HD_52#		HD_60#		HD_63#		VSS		VTTFSB
F		HD_20#	HD_24#	HD_21#		VSS		VSS		VSS		VSS		VSS		VSS		VTTFSB	
E	VSS	HD_22#	VSS	HD_28#	HD_27#		HD_35#		HDSTB_ P2#		HD_46#		HDSTB_ P3#		HD_58#		VSS		VTTFSB
D		HD_25#	HD_19#	VSS	HD_32#	HD_36#	HD_39#	HD_33#	HD_34#	HD_50#	HDVREF _2	HD_49#	HDSTB_ N3#	HD_62#	VSS	CPURST#	VSS	VTTFSB	VTTFSB
C	VSS	HD_31#	DINV_1#	HD_37#	VSS	HD_41#	VSS	HDSTB_ N2#	VSS	HD_47#	VSS	DINV_3#	VSS	HD_55#	VSS	HD_59#	VSS	VTTFSB	VTTFSB
B	NC	VSS	HD_29#	HD_38#	DINV_2#	HD_43#	HD_42#	HD_44#	HD_45#	HX_ RCOMP	HD_48#	HD_51#	HD_54#	HD_57#	HD_56#	HD_61#	VSS	VTTFSB	VTTFSB
A	RSVD	NC	VSS		VSS		VTT_ DECAP		VSS		VSS		VSS		VSS		VSS		
	37	36	35	34	33	32	31	30	29	28	27	26	25	24	23	22	21	20	19

Figure 7-2. Intel® 82845G GMCH Ballout Footprint (Top View – Right Side)

18	17	16	15	14	13	12	11	10	9	8	7	6	5	4	3	2	1	
	VCCSM		VSS		VCCSM		VSS		VCCSM		VSS		VCCSM		VSS	NC	NC	AU
SDQ_26	SDQS_3	SDQ_29	SDQ_24	SDQ_19	SDQ_18	SDQS_2	SDQ_17	SDQ_20	SDQ_10	SDQ_14	SDQS_1	SDQ_12	SDQ_8	SDQ_7	SDQ_2	VSS	NC	AT
SDM_3	VSS	SDQ_28	VSS	SDQ_22	VSS	SDQ_21	VSS	SDQ_11	VSS	SDM_1	VSS	SDQ_9	VSS	SDQ_6	VSS	SDQS_0	VSS	AR
SDQ_30	SMAA_7	SDQ_25	VCCSM	SDQ_23	SCKE_0	SDM_2	SCMD CLK_1#	SDQ_16	SCMD CLK_4	SDQ_15	VCCSM	SDQ_13	SDQ_3	SDM_0	SDQ_5	SDQ_1		AP
	SMAA_8		SMAA_12		SCKE_1		SCMD CLK_1		SCMD CLK_4#		VSS		VSS	SDQ_0	VSS	SDQ_4	VSS	AN
VCCSM		VSS		VCCSM		VSS		VSS		VSS		VSS		VSS	VSS	SM_VREF		AM
	SMAA_5		SMAA_11		SCKE_3		VCCSM		VCCSM		VCCSM		VCCSM	VCCSM	VCCSM	VCCSM	VCCSM	AL
SMAB_5		SMAA_9		SCKE_2		VSS		VCCSM		VCCSM		VCCSM		VCCSM	VCCSM	VCCSM		AK
	VSS		VCCSM		VSS		VCCSM		VCCSM		VCCSM		VCCSM	VCCSM	VCCSM	VCCSM	VCCSM	AJ
VCCSM		VSS		VCCSM		VCCSM		VCCSM		VCCSM		VCCSM		VCCSM	VCCSM	VCCSM		AH
									VCCSM		VCCSM		VSS	VSS	VSS	VCCA_SM	VCCA_SM	AG
								SMXRCOMP		VSS		VSS		HI_5	HI_8	HI_10		AF
									VSS		GCLKIN		HI_7	HI_6	VCCHI	HI_9	VSS	AE
								VCCA_HI		HI_4		VCCHI		HI_STBS	HI_VREF	HI_SWING		AD
									VCCHI		HI_2		HI_3	HI_STBF	VSS	HI_RCOMP	VCCHI	AC
								VCCAGP		HI_1		VSS		VSS	RSVD	TESTIN#		AB
VSS	VCC								VSS		HI_0		RSVD	RSVD	RSVD	RSVD	VSS	AA
VSS	VSS							VSS		RSVD		VSS		RSVD	PSB_SEL	MEM_SEL		Y
VCC	VCC								VCCAGP		RSVD		GAD_3	GAD_2	VSS	AGP_VREF		W
VSS	VSS							VCCAGP		GADSTB_0		VCCAGP		GAD_0	GAD_7	GAD_1		V
VSS	VCC								VSS		GADSTB_0#		GAD_4	GAD_5	VSS	GAD_6	VSS	U
								VSS		GAD_14		VSS		GAD_10	GAD_9	GAD_8		T
									VCCAGP		GAD_13		GAD_12	GC/BE_0#	VSS	GAD_11	VCCAGP	R
								VCCAGP		GAD_16		VCCAGP		GPAR	GAD_15	GSTOP#		P
									VSS		GIRDY#		GTRDY#	GC/BE_1#	VSS	GDEVSEL#	VSS	N
								VSS		GADSTB_1		VSS		GFRAME#	GAD_20	GC/BE_2#		M
									VCCAGP		GADSTB_1#		GAD_21	GAD_22	VSS	AGP_RCOMP	VCCAGP	L
VTTFSB		VCC		VCC		VCC		VCC		GAD_30		VCCAGP		GAD_17	GAD_25	GAD_18		K
	VSS		VCC		VCC		VCC		VSS		GAD_28		GAD_27	GAD_26	VSS	GAD_19	VSS	J
VTTFSB		BLUE#		VCC		VCC		VCC		GPIPE#		VSS		GAD_23	GAD_29	GC/BE_3#		H
	VSS		BLUE		VCC		VCC		VSS		GRBF#		GWBF#	GAD_31	VSS	GAD_24	VCCAGP	G
VTTFSB		GREEN#		VSS		VCC		VCC		VSS		VSS		GSBSTB	GSBA_6	GSBA_7		F
	VSS		GREEN		VSS		VCC		VCC		PWROK		GSBSTB#	GSBA_4	VSS	GSBA_5	VSS	E
VTTFSB	VSS	RED#	VSS	DREFCLK	VSS	VCC	VCC	VCC	VCC	VSS	DDCA_CLK	VCCAGP	GREQ#	VCCAGP	GSBA_2	GSBA_3		D
VTTFSB	VSS	VSS	RED	VSSA_DAC	VSS	VCC	VCC	VCC	VCC	VSS	DDCA_DATA	VSYNC	VSS	GST_0	GSBA_0	GSBA_1	VCCAGP	C
VTTFSB	VSS	REFSET	VSSA_DAC	VCCA_DAC	VSS	VCC	VCC	VCC	VCC	VSS	HSYNC	VCCGPIO	GGNT#	GST_1	GST_2	VSS	NC	B
	VCCA_FSB		VCCA_DAC		VCCA_DPLL		VCC		VCC		VCCAGP		VSS		VCCAGP	NC		A
18	17	16	15	14	13	12	11	10	9	8	7	6	5	4	3	2	1	

Table 7-1. Intel® 82845G GMCH Ballout by Ball Number

Ball #	Signal Name
A2	NC
A3	VCCAGP
A5	VSS
A7	VCCAGP
A9	VCC
A11	VCC
A13	VCCA_DPLL
A15	VCCA_DAC
A17	VCCA_FSB
A21	VSS
A23	VSS
A25	VSS
A27	VSS
A29	VSS
A31	VTT_DECAP
A33	VSS
A35	VSS
A36	NC
A37	RSVD
B1	NC
B2	VSS
B3	GST_2
B4	GST_1
B5	GGNT#
B6	VCCGPIO
B7	HSYNC
B8	VSS
B9	VCC
B10	VCC
B11	VCC
B12	VCC
B13	VSS
B14	VCCA_DAC
B15	VSSA_DAC
B16	REFSET
B17	VSS
B18	VTTFSB
B19	VTTFSB
B20	VTTFSB
B21	VSS
B22	HD_61#
B23	HD_56#
B24	HD_57#

Table 7-1. Intel® 82845G GMCH Ballout by Ball Number

Ball #	Signal Name
B25	HD_54#
B26	HD_51#
B27	HD_48#
B28	HX_RCOMP
B29	HD_45#
B30	HD_44#
B31	HD_42#
B32	HD_43#
B33	DINV_2#
B34	HD_38#
B35	HD_29#
B36	VSS
B37	NC
C1	VCCAGP
C2	GSBA_1
C3	GSBA_0
C4	GST_0
C5	VSS
C6	VSYNC
C7	DDCA_DATA
C8	VSS
C9	VCC
C10	VCC
C11	VCC
C12	VCC
C13	VSS
C14	VSSA_DAC
C15	RED
C16	VSS
C17	VSS
C18	VTTFSB
C19	VTTFSB
C20	VTTFSB
C21	VSS
C22	HD_59#
C23	VSS
C24	HD_55#
C25	VSS
C26	DINV_3#
C27	VSS
C28	HD_47#
C29	VSS
C30	HDSTB_N2#

Table 7-1. Intel® 82845G GMCH Ballout by Ball Number

Ball #	Signal Name
C31	VSS
C32	HD_41#
C33	VSS
C34	HD_37#
C35	DINV_1#
C36	HD_31#
C37	VSS
D2	GSBA_3
D3	GSBA_2
D4	VCCAGP
D5	GREQ#
D6	VCCAGP
D7	DDCA_CLK
D8	VSS
D9	VCC
D10	VCC
D11	VCC
D12	VCC
D13	VSS
D14	DREFCLK
D15	VSS
D16	RED#
D17	VSS
D18	VTTFSB
D19	VTTFSB
D20	VTTFSB
D21	VSS
D22	CPURST#
D23	VSS
D24	HD_62#
D25	HDSTB_N3#
D26	HD_49#
D27	HDVREF_2
D28	HD_50#
D29	HD_34#
D30	HD_33#
D31	HD_39#
D32	HD_36#
D33	HD_32#
D34	VSS
D35	HD_19#
D36	HD_25#
E1	VSS

Table 7-1. Intel® 82845G GMCH Ballout by Ball Number

Ball #	Signal Name
E2	GSBA_5
E3	VSS
E4	GSBA_4
E5	GSBSTB#
E7	PWROK
E9	VCC
E11	VCC
E13	VSS
E15	GREEN
E17	VSS
E19	VTTFSB
E21	VSS
E23	HD_58#
E25	HDSTB_P3#
E27	HD_46#
E29	HDSTB_P2#
E31	HD_35#
E33	HD_27#
E34	HD_28#
E35	VSS
E36	HD_22#
E37	VSS
F2	GSBA_7
F3	GSBA_6
F4	GSBSTB
F6	VSS
F8	VSS
F10	VCC
F12	VCC
F14	VSS
F16	GREEN#
F18	VTTFSB
F20	VTTFSB
F22	VSS
F24	VSS
F26	VSS
F28	VSS
F30	VSS
F32	VSS
F34	HD_21#
F35	HD_24#
F36	HD_20#
G1	VCCAGP

Table 7-1. Intel® 82845G GMCH Ballout by Ball Number

Ball #	Signal Name
G2	GAD_24
G3	VSS
G4	GAD_31
G5	GWBF#
G7	GRBF#
G9	VSS
G11	VCC
G13	VCC
G15	BLUE
G17	VSS
G19	VTTFSB
G21	VSS
G23	HD_63#
G25	HD_60#
G27	HD_52#
G29	HD_40#
G31	HD_30#
G33	HDSTB_N1#
G34	HD_16#
G35	VSS
G36	HD_17#
G37	VTT_DECAP
H2	GC/BE_3#
H3	GAD_29
H4	GAD_23
H6	VSS
H8	GPIPE#
H10	VCC
H12	VCC
H14	VCC
H16	BLUE#
H18	VTTFSB
H20	VTTFSB
H22	VSS
H24	HDVREF_1
H26	HD_53#
H28	HX_SWING
H30	HDVREF_0
H32	VSS
H34	HD_23#
H35	HD_26#
H36	HD_15#
J1	VSS

Table 7-1. Intel® 82845G GMCH Ballout by Ball Number

Ball #	Signal Name
J2	GAD_19
J3	VSS
J4	GAD_26
J5	GAD_27
J7	GAD_28
J9	VSS
J11	VCC
J13	VCC
J15	VCC
J17	VSS
J19	VTTFSB
J21	VSS
J23	VSS
J25	VSS
J27	VSS
J29	VSS
J31	HCLKN
J33	HD_18#
J34	HDSTB_P1#
J35	VSS
J36	HD_8#
J37	VSS
K2	GAD_18
K3	GAD_25
K4	GAD_17
K6	VCCAGP
K8	GAD_30
K10	VCC
K12	VCC
K14	VCC
K16	VCC
K18	VTTFSB
K20	VTTFSB
K22	VTTFSB
K24	VSS
K26	VTTFSB
K28	VSS
K30	HCLKP
K32	VSS
K34	HD_9#
K35	HD_14#
K36	HD_10#
L1	VCCAGP

Table 7-1. Intel® 82845G GMCH Ballout by Ball Number

Ball #	Signal Name
L2	AGP_RCOMP
L3	VSS
L4	GAD_22
L5	GAD_21
L7	GADSTB_1#
L9	VCCAGP
L29	VSS
L31	HDSTB_P0#
L33	HD_5#
L34	HD_13#
L35	VSS
L36	HD_6#
L37	VTT_DECAP
M2	GC/BE_2#
M3	GAD_20
M4	GFRAME#
M6	VSS
M8	GADSTB_1
M10	VSS
M28	VTTFSB
M30	HD_11#
M32	VSS
M34	BPRI#
M35	HD_12#
M36	HITM#
N1	VSS
N2	GDEVSEL#
N3	VSS
N4	GC/BE_1#
N5	GTRDY#
N7	GIRDY#
N9	VSS
N29	VSS
N31	HDSTB_N0#
N33	DINV_0#
N34	HD_3#
N35	VSS
N36	DEFER#
N37	VSS
P2	GSTOP#
P3	GAD_15
P4	GPAR
P6	VCCAGP

Table 7-1. Intel® 82845G GMCH Ballout by Ball Number

Ball #	Signal Name
P8	GAD_16
P10	VCCAGP
P28	VSS
P30	HCC_VREF
P32	VSS
P34	RS_2#
P35	HD_7#
P36	HIT#
R1	VCCAGP
R2	GAD_11
R3	VSS
R4	GC/BE_0#
R5	GAD_12
R7	GAD_13
R9	VCCAGP
R29	VSS
R31	HD_4#
R33	HD_1#
R34	HD_2#
R35	VSS
R36	RS_0#
R37	VTT_DECAP
T2	GAD_8
T3	GAD_9
T4	GAD_10
T6	VSS
T8	GAD_14
T10	VSS
T28	VTTFSB
T30	HD_0#
T32	VSS
T34	BNR#
T35	HLOCK#
T36	ADS#
U1	VSS
U2	GAD_6
U3	VSS
U4	GAD_5
U5	GAD_4
U7	GADSTB_0#
U9	VSS
U17	VCC
U18	VSS

Table 7-1. Intel® 82845G GMCH Ballout by Ball Number

Ball #	Signal Name
U19	VCC
U20	VSS
U21	VCC
U29	VSS
U31	DBSY#
U33	BREQ0#
U34	RS_1#
U35	VSS
U36	DRDY#
U37	VSS
V2	GAD_1
V3	GAD_7
V4	GAD_0
V6	VCCAGP
V8	GADSTB_0
V10	VCCAGP
V17	VSS
V18	VSS
V19	VCC
V20	VSS
V21	VSS
V28	VSS
V30	HTRDY#
V32	VSS
V34	HA_6#
V35	HY_RCOMP
V36	HREQ_0#
W2	AGP_VREF
W3	VSS
W4	GAD_2
W5	GAD_3
W7	RSVD
W9	VCCAGP
W17	VCC
W18	VCC
W19	VCC
W20	VCC
W21	VCC
W29	VSS
W31	HA_3#
W33	HREQ_2#
W34	VSS
W35	HREQ_4#

Table 7-1. Intel® 82845G GMCH Ballout by Ball Number

Ball #	Signal Name
W36	VSS
Y2	MEM_SEL
Y3	PSB_SEL
Y4	RSVD
Y6	VSS
Y8	RSVD
Y10	VSS
Y17	VSS
Y18	VSS
Y19	VCC
Y20	VSS
Y21	VSS
Y28	VTTFSB
Y30	HY_SWING
Y32	VSS
Y34	HA_13#
Y35	HA_9#
Y36	HA_7#
AA1	VSS
AA2	RSVD
AA3	RSVD
AA4	RSVD
AA5	RSVD
AA7	HI_0
AA9	VSS
AA17	VCC
AA18	VSS
AA19	VCC
AA20	VSS
AA21	VCC
AA29	VSS
AA31	HREQ_1#
AA33	HA_4#
AA34	HREQ_3#
AA35	VSS
AA36	HA_10#
AA37	VSS
AB2	TESTIN#
AB3	RSVD
AB4	VSS
AB6	VSS
AB8	HI_1
AB10	VCCAGP

Table 7-1. Intel® 82845G GMCH Ballout by Ball Number

Ball #	Signal Name
AB28	VSS
AB30	HA_5#
AB32	VSS
AB34	HA_12#
AB35	HADSTB_0#
AB36	HA_14#
AC1	VCCHI
AC2	HI_RCOMP
AC3	VSS
AC4	HI_STBF
AC5	HI_3
AC7	HI_2
AC9	VCCHI
AC29	VSS
AC31	HA_16#
AC33	HA_8#
AC34	HA_11#
AC35	VSS
AC36	HA_15#
AC37	VTT_DECAP
AD2	HI_SWING
AD3	HI_VREF
AD4	HI_STBS
AD6	VCCHI
AD8	HI_4
AD10	VCCA_HI
AD28	VTTFSB
AD30	HA_VREF
AD32	VSS
AD34	HA_21#
AD35	HA_19#
AD36	HA_18#
AE1	VSS
AE2	HI_9
AE3	VCCHI
AE4	HI_6
AE5	HI_7
AE7	GCLKIN
AE9	VSS
AE29	VSS
AE31	HA_28#
AE33	HA_24#
AE34	HA_20#

Table 7-1. Intel® 82845G GMCH Ballout by Ball Number

Ball #	Signal Name
AE35	VSS
AE36	HA_22#
AE37	VSS
AF2	HI_10
AF3	HI_8
AF4	HI_5
AF6	VSS
AF8	VSS
AF10	SMXRCOMP
AF28	VSS
AF30	HADSTB_1#
AF32	VSS
AF34	HA_25#
AF35	HA_17#
AF36	HA_23#
AG1	VCCA_SM
AG2	VCCA_SM
AG3	VSS
AG4	VSS
AG5	VSS
AG7	VCCSM
AG9	VCCSM
AG29	VSS
AG31	HA_31#
AG33	HA_30#
AG34	HA_26#
AG35	VSS
AG36	HA_27#
AG37	VSS
AH2	VCCSM
AH3	VCCSM
AH4	VCCSM
AH6	VCCSM
AH8	VCCSM
AH10	VCCSM
AH12	VCCSM
AH14	VCCSM
AH16	VSS
AH18	VCCSM
AH20	VSS
AH22	VCCSM
AH24	VSS
AH26	VCCSM

Table 7-1. Intel® 82845G GMCH Ballout by Ball Number

Ball #	Signal Name
AH28	VSS
AH30	VSS
AH32	VSS
AH34	NC
AH35	HA_29#
AH36	VSS
AJ1	VCCSM
AJ2	VCCSM
AJ3	VCCSM
AJ4	VCCSM
AJ5	VCCSM
AJ7	VCCSM
AJ9	VCCSM
AJ11	VCCSM
AJ13	VSS
AJ15	VCCSM
AJ17	VSS
AJ19	VCCSM
AJ21	VSS
AJ23	VCCSM
AJ25	VSS
AJ27	VCCSM
AJ29	VSS
AJ31	RSTIN#
AJ33	VSS
AJ34	SMYRCOMP
AJ35	NC
AJ36	SDQ_59
AJ37	VSS
AK2	VCCSM
AK3	VCCSM
AK4	VCCSM
AK6	VCCSM
AK8	VCCSM
AK10	VCCSM
AK12	VSS
AK14	SCKE_2
AK16	SMAA_9
AK18	SMAB_5
AK20	SMAA_3
AK22	SCMDCLK_0#
AK24	SRCVEN_OUT#
AK26	SMAA_10

Table 7-1. Intel® 82845G GMCH Ballout by Ball Number

Ball #	Signal Name
AK28	SRAS#
AK30	SCS_2#
AK32	VCCSM
AK34	SDQ_63
AK35	SDQ_62
AK36	SDQ_58
AL1	VCCSM
AL2	VCCSM
AL3	VCCSM
AL4	VCCSM
AL5	VCCSM
AL7	VCCSM
AL9	VCCSM
AL11	VCCSM
AL13	SCKE_3
AL15	SMAA_11
AL17	SMAA_5
AL19	SMAA_4
AL21	SCMDCLK_0
AL23	SRCVEN_IN#
AL25	SMAA_0
AL27	VSS
AL29	SCS_0#
AL31	VSS
AL33	SCMDCLK_2#
AL34	SDM_7
AL35	VSS
AL36	SDQS_7
AL37	VCCSM
AM2	SM_VREF
AM3	VSS
AM4	VSS
AM6	VSS
AM8	VSS
AM10	VSS
AM12	VSS
AM14	VCCSM
AM16	VSS
AM18	VCCSM
AM20	VSS
AM22	VCCSM
AM24	VSS
AM26	VCCSM

Table 7-1. Intel® 82845G GMCH Ballout by Ball Number

Ball #	Signal Name
AM28	VSS
AM30	VCCSM
AM32	VSS
AM34	SCMDCLK_2
AM35	SDQ_61
AM36	SDQ_57
AN1	VSS
AN2	SDQ_4
AN3	VSS
AN4	SDQ_0
AN5	VSS
AN7	VSS
AN9	SCMDCLK_4#
AN11	SCMDCLK_1
AN13	SCKE_1
AN15	SMAA_12
AN17	SMAA_8
AN19	SMAB_4
AN21	SCMDCLK_3#
AN23	SMAB_2
AN25	SMAA_1
AN27	SBA_0
AN29	SCAS#
AN31	SCS_3#
AN33	VSS
AN34	SCMDCLK_5#
AN35	VSS
AN36	SDQ_56
AN37	VSS
AP2	SDQ_1
AP3	SDQ_5
AP4	SDM_0
AP5	SDQ_3
AP6	SDQ_13
AP7	VCCSM
AP8	SDQ_15
AP9	SCMDCLK_4
AP10	SDQ_16
AP11	SCMDCLK_1#
AP12	SDM_2
AP13	SCKE_0
AP14	SDQ_23
AP15	VCCSM

Table 7-1. Intel® 82845G GMCH Ballout by Ball Number

Ball #	Signal Name
AP16	SDQ_25
AP17	SMAA_7
AP18	SDQ_30
AP19	SMAA_6
AP20	VCCSM
AP21	SCMDCLK_3
AP22	SDQ_33
AP23	SMAA_2
AP24	SDQ_34
AP25	SMAB_1
AP26	SDQ_40
AP27	SBA_1
AP28	SDM_5
AP29	SWE#
AP30	SDQ_43
AP31	SCS_1#
AP32	SDQ_52
AP33	SCMDCLK_5
AP34	SDQ_54
AP35	SDQ_51
AP36	SDQ_60
AR1	VSS
AR2	SDQS_0
AR3	VSS
AR4	SDQ_6
AR5	VSS
AR6	SDQ_9
AR7	VSS
AR8	SDM_1
AR9	VSS
AR10	SDQ_11
AR11	VSS
AR12	SDQ_21
AR13	VSS
AR14	SDQ_22
AR15	VSS
AR16	SDQ_28
AR17	VSS
AR18	SDM_3
AR19	VSS
AR20	SDQ_31
AR21	VSS
AR22	SDQ_32

Table 7-1. Intel® 82845G GMCH Ballout by Ball Number

Ball #	Signal Name
AR23	VSS
AR24	SDQS_4
AR25	VSS
AR26	SDQ_39
AR27	VSS
AR28	SDQ_45
AR29	VSS
AR30	SDQ_42
AR31	VSS
AR32	SDQ_48
AR33	VSS
AR34	SDM_6
AR35	VSS
AR36	SDQ_50
AR37	VSS
AT1	NC
AT2	VSS
AT3	SDQ_2
AT4	SDQ_7
AT5	SDQ_8
AT6	SDQ_12
AT7	SDQS_1
AT8	SDQ_14
AT9	SDQ_10
AT10	SDQ_20
AT11	SDQ_17
AT12	SDQS_2
AT13	SDQ_18
AT14	SDQ_19
AT15	SDQ_24
AT16	SDQ_29
AT17	SDQS_3
AT18	SDQ_26
AT19	SDQ_27
AT20	VCCQSM
AT21	VCCQSM
AT22	SDQ_36
AT23	SDQ_37
AT24	SDM_4
AT25	SDQ_38
AT26	SDQ_35
AT27	SDQ_44
AT28	SDQ_41

Table 7-1. Intel® 82845G GMCH Ballout by Ball Number

Ball #	Signal Name
AT29	SDQS_5
AT30	SDQ_46
AT31	SDQ_47
AT32	SDQ_49
AT33	SDQ_53
AT34	SDQS_6
AT35	SDQ_55
AT36	VSS
AT37	NC
AU1	NC
AU2	NC
AU3	VSS
AU5	VCCSM
AU7	VSS
AU9	VCCSM
AU11	VSS
AU13	VCCSM
AU15	VSS
AU17	VCCSM
AU21	VCCQSM
AU23	VSS
AU25	VCCSM
AU27	VSS
AU29	VCCSM
AU31	VSS
AU33	VCCSM
AU35	VSS
AU36	NC
AU37	NC

Table 7-2. Intel® 82845G GMCH Ballout by Signal Name

Signal Name	Ball #
ADS#	T36
AGP_RCOMP	L2
AGP_VREF	W2
BLUE	G15
BLUE#	H16
BNR#	T34
BPRI#	M34
BREQ0#	U33
CPURST#	D22
DBSY#	U31
DDCA_CLK	D7
DDCA_DATA	C7
DEFER#	N36
DINV_0#	N33
DINV_1#	C35
DINV_2#	B33
DINV_3#	C26
DRDY#	U36
DREFCLK	D14
GAD_0	V4
GAD_1	V2
GAD_2	W4
GAD_3	W5
GAD_4	U5
GAD_5	U4
GAD_6	U2
GAD_7	V3
GAD_8	T2
GAD_9	T3
GAD_10	T4
GAD_11	R2
GAD_12	R5
GAD_13	R7
GAD_14	T8
GAD_15	P3
GAD_16	P8
GAD_17	K4
GAD_18	K2
GAD_19	J2
GAD_20	M3
GAD_21	L5
GAD_22	L4
GAD_23	H4

Table 7-2. Intel® 82845G GMCH Ballout by Signal Name

Signal Name	Ball #
GAD_24	G2
GAD_25	K3
GAD_26	J4
GAD_27	J5
GAD_28	J7
GAD_29	H3
GAD_30	K8
GAD_31	G4
GADSTB_0	V8
GADSTB_0#	U7
GADSTB_1	M8
GADSTB_1#	L7
GC/BE_0#	R4
GC/BE_1#	N4
GC/BE_2#	M2
GC/BE_3#	H2
GCLKIN	AE7
GDEVSEL#	N2
GFRAME#	M4
GGNT#	B5
GIRDY#	N7
GPAR	P4
GPIPE#	H8
GRBF#	G7
GREEN	E15
GREEN#	F16
GREQ#	D5
GSBA_0	C3
GSBA_1	C2
GSBA_2	D3
GSBA_3	D2
GSBA_4	E4
GSBA_5	E2
GSBA_6	F3
GSBA_7	F2
GSBSTB	F4
GSBSTB#	E5
GST_0	C4
GST_1	B4
GST_2	B3
GSTOP#	P2
GTRDY#	N5
GWBF#	G5

Table 7-2. Intel® 82845G GMCH Ballout by Signal Name

Signal Name	Ball #
HA_3#	W31
HA_4#	AA33
HA_5#	AB30
HA_6#	V34
HA_7#	Y36
HA_8#	AC33
HA_9#	Y35
HA_10#	AA36
HA_11#	AC34
HA_12#	AB34
HA_13#	Y34
HA_14#	AB36
HA_15#	AC36
HA_16#	AC31
HA_17#	AF35
HA_18#	AD36
HA_19#	AD35
HA_20#	AE34
HA_21#	AD34
HA_22#	AE36
HA_23#	AF36
HA_24#	AE33
HA_25#	AF34
HA_26#	AG34
HA_27#	AG36
HA_28#	AE31
HA_29#	AH35
HA_30#	AG33
HA_31#	AG31
HA_VREF	AD30
HADSTB_0#	AB35
HADSTB_1#	AF30
HCC_VREF	P30
HCLKN	J31
HCLKP	K30
HD_0#	T30
HD_1#	R33
HD_2#	R34
HD_3#	N34
HD_4#	R31
HD_5#	L33
HD_6#	L36
HD_7#	P35

Table 7-2. Intel® 82845G GMCH Ballout by Signal Name

Signal Name	Ball #
HD_8#	J36
HD_9#	K34
HD_10#	K36
HD_11#	M30
HD_12#	M35
HD_13#	L34
HD_14#	K35
HD_15#	H36
HD_16#	G34
HD_17#	G36
HD_18#	J33
HD_19#	D35
HD_20#	F36
HD_21#	F34
HD_22#	E36
HD_23#	H34
HD_24#	F35
HD_25#	D36
HD_26#	H35
HD_27#	E33
HD_28#	E34
HD_29#	B35
HD_30#	G31
HD_31#	C36
HD_32#	D33
HD_33#	D30
HD_34#	D29
HD_35#	E31
HD_36#	D32
HD_37#	C34
HD_38#	B34
HD_39#	D31
HD_40#	G29
HD_41#	C32
HD_42#	B31
HD_43#	B32
HD_44#	B30
HD_45#	B29
HD_46#	E27
HD_47#	C28
HD_48#	B27
HD_49#	D26
HD_50#	D28

Table 7-2. Intel® 82845G GMCH Ballout by Signal Name

Signal Name	Ball #
HD_51#	B26
HD_52#	G27
HD_53#	H26
HD_54#	B25
HD_55#	C24
HD_56#	B23
HD_57#	B24
HD_58#	E23
HD_59#	C22
HD_60#	G25
HD_61#	B22
HD_62#	D24
HD_63#	G23
HDSTB_N0#	N31
HDSTB_N1#	G33
HDSTB_N2#	C30
HDSTB_N3#	D25
HDSTB_P0#	L31
HDSTB_P1#	J34
HDSTB_P2#	E29
HDSTB_P3#	E25
HDVREF_0	H30
HDVREF_1	H24
HDVREF_2	D27
HI_0	AA7
HI_1	AB8
HI_2	AC7
HI_3	AC5
HI_4	AD8
HI_5	AF4
HI_6	AE4
HI_7	AE5
HI_8	AF3
HI_9	AE2
HI_10	AF2
HI_RCOMP	AC2
HI_STBF	AC4
HI_STBS	AD4
HI_SWING	AD2
HI_VREF	AD3
HIT#	P36
HITM#	M36
HLOCK#	T35

Table 7-2. Intel® 82845G GMCH Ballout by Signal Name

Signal Name	Ball #
HREQ_0#	V36
HREQ_1#	AA31
HREQ_2#	W33
HREQ_3#	AA34
HREQ_4#	W35
HSYNC	B7
HTRDY#	V30
HX_RCOMP	B28
HX_SWING	H28
HY_RCOMP	V35
HY_SWING	Y30
MEM_SEL	Y2
NC	A2
NC	A36
NC	B1
NC	B37
NC	AH34
NC	AJ35
NC	AT1
NC	AT37
NC	AU1
NC	AU2
NC	AU36
NC	AU37
PSB_SEL	Y3
PWROK	E7
RED	C15
RED#	D16
REFSET	B16
RS_0#	R36
RS_1#	U34
RS_2#	P34
RSTIN#	AJ31
RSVD	A37
RSVD	W7
RSVD	Y4
RSVD	Y8
RSVD	AA2
RSVD	AA3
RSVD	AA4
RSVD	AA5
RSVD	AB3
SBA_0	AN27

Table 7-2. Intel® 82845G GMCH Ballout by Signal Name

Signal Name	Ball #
SBA_1	AP27
SCAS#	AN29
SCKE_0	AP13
SCKE_1	AN13
SCKE_2	AK14
SCKE_3	AL13
SCMDCLK_0	AL21
SCMDCLK_0#	AK22
SCMDCLK_1	AN11
SCMDCLK_1#	AP11
SCMDCLK_2	AM34
SCMDCLK_2#	AL33
SCMDCLK_3	AP21
SCMDCLK_3#	AN21
SCMDCLK_4	AP9
SCMDCLK_4#	AN9
SCMDCLK_5	AP33
SCMDCLK_5#	AN34
SCS_0#	AL29
SCS_1#	AP31
SCS_2#	AK30
SCS_3#	AN31
SDM_0	AP4
SDM_1	AR8
SDM_2	AP12
SDM_3	AR18
SDM_4	AT24
SDM_5	AP28
SDM_6	AR34
SDM_7	AL34
SDQ_0	AN4
SDQ_1	AP2
SDQ_2	AT3
SDQ_3	AP5
SDQ_4	AN2
SDQ_5	AP3
SDQ_6	AR4
SDQ_7	AT4
SDQ_8	AT5
SDQ_9	AR6
SDQ_10	AT9
SDQ_11	AR10
SDQ_12	AT6

Table 7-2. Intel® 82845G GMCH Ballout by Signal Name

Signal Name	Ball #
SDQ_13	AP6
SDQ_14	AT8
SDQ_15	AP8
SDQ_16	AP10
SDQ_17	AT11
SDQ_18	AT13
SDQ_19	AT14
SDQ_20	AT10
SDQ_21	AR12
SDQ_22	AR14
SDQ_23	AP14
SDQ_24	AT15
SDQ_25	AP16
SDQ_26	AT18
SDQ_27	AT19
SDQ_28	AR16
SDQ_29	AT16
SDQ_30	AP18
SDQ_31	AR20
SDQ_32	AR22
SDQ_33	AP22
SDQ_34	AP24
SDQ_35	AT26
SDQ_36	AT22
SDQ_37	AT23
SDQ_38	AT25
SDQ_39	AR26
SDQ_40	AP26
SDQ_41	AT28
SDQ_42	AR30
SDQ_43	AP30
SDQ_44	AT27
SDQ_45	AR28
SDQ_46	AT30
SDQ_47	AT31
SDQ_48	AR32
SDQ_49	AT32
SDQ_50	AR36
SDQ_51	AP35
SDQ_52	AP32
SDQ_53	AT33
SDQ_54	AP34
SDQ_55	AT35

Table 7-2. Intel® 82845G GMCH Ballout by Signal Name

Signal Name	Ball #
SDQ_56	AN36
SDQ_57	AM36
SDQ_58	AK36
SDQ_59	AJ36
SDQ_60	AP36
SDQ_61	AM35
SDQ_62	AK35
SDQ_63	AK34
SDQS_0	AR2
SDQS_1	AT7
SDQS_2	AT12
SDQS_3	AT17
SDQS_4	AR24
SDQS_5	AT29
SDQS_6	AT34
SDQS_7	AL36
SM_VREF	AM2
SMAA_0	AL25
SMAA_1	AN25
SMAA_2	AP23
SMAA_3	AK20
SMAA_4	AL19
SMAA_5	AL17
SMAA_6	AP19
SMAA_7	AP17
SMAA_8	AN17
SMAA_9	AK16
SMAA_10	AK26
SMAA_11	AL15
SMAA_12	AN15
SMAB_1	AP25
SMAB_2	AN23
SMAB_4	AN19
SMAB_5	AK18
SMXRCOMP	AF10
SMYRCOMP	AJ34
SRAS#	AK28
SRCVEN_IN#	AL23
SRCVEN_OUT#	AK24
SWE#	AP29
TESTIN#	AB2
VCC	A9
VCC	A11

Table 7-2. Intel® 82845G GMCH Ballout by Signal Name

Signal Name	Ball #
VCC	B9
VCC	B10
VCC	B11
VCC	B12
VCC	C9
VCC	C10
VCC	C11
VCC	C12
VCC	D9
VCC	D10
VCC	D11
VCC	D12
VCC	E9
VCC	E11
VCC	F10
VCC	F12
VCC	G11
VCC	G13
VCC	H10
VCC	H12
VCC	H14
VCC	J11
VCC	J13
VCC	J15
VCC	K10
VCC	K12
VCC	K14
VCC	K16
VCC	U17
VCC	U19
VCC	U21
VCC	V19
VCC	W17
VCC	W18
VCC	W19
VCC	W20
VCC	W21
VCC	Y19
VCC	AA17
VCC	AA19
VCC	AA21
VCCA_DAC	A15
VCCA_DAC	B14

Table 7-2. Intel® 82845G GMCH Ballout by Signal Name

Signal Name	Ball #
VCCA_DPLL	A13
VCCA_FSB	A17
VCCA_HI	AD10
VCCA_SM	AG1
VCCA_SM	AG2
VCCAGP	A3
VCCAGP	A7
VCCAGP	C1
VCCAGP	D4
VCCAGP	D6
VCCAGP	G1
VCCAGP	K6
VCCAGP	L1
VCCAGP	L9
VCCAGP	P6
VCCAGP	P10
VCCAGP	R1
VCCAGP	R9
VCCAGP	V6
VCCAGP	V10
VCCAGP	W9
VCCAGP	AB10
VCCGPIO	B6
VCCHI	AC1
VCCHI	AC9
VCCHI	AD6
VCCHI	AE3
VCCQSM	AT20
VCCQSM	AT21
VCCQSM	AU21
VCCSM	AG7
VCCSM	AG9
VCCSM	AH2
VCCSM	AH3
VCCSM	AH4
VCCSM	AH6
VCCSM	AH8
VCCSM	AH10
VCCSM	AH12
VCCSM	AH14
VCCSM	AH18
VCCSM	AH22
VCCSM	AH26

Table 7-2. Intel® 82845G GMCH Ballout by Signal Name

Signal Name	Ball #
VCCSM	AJ1
VCCSM	AJ2
VCCSM	AJ3
VCCSM	AJ4
VCCSM	AJ5
VCCSM	AJ7
VCCSM	AJ9
VCCSM	AJ11
VCCSM	AJ15
VCCSM	AJ19
VCCSM	AJ23
VCCSM	AJ27
VCCSM	AK2
VCCSM	AK3
VCCSM	AK4
VCCSM	AK6
VCCSM	AK8
VCCSM	AK10
VCCSM	AK32
VCCSM	AL1
VCCSM	AL2
VCCSM	AL3
VCCSM	AL4
VCCSM	AL5
VCCSM	AL7
VCCSM	AL9
VCCSM	AL11
VCCSM	AL37
VCCSM	AM14
VCCSM	AM18
VCCSM	AM22
VCCSM	AM26
VCCSM	AM30
VCCSM	AP7
VCCSM	AP15
VCCSM	AP20
VCCSM	AU5
VCCSM	AU9
VCCSM	AU13
VCCSM	AU17
VCCSM	AU25
VCCSM	AU29
VCCSM	AU33

Table 7-2. Intel® 82845G GMCH Ballout by Signal Name

Signal Name	Ball #
VSS	A5
VSS	A21
VSS	A23
VSS	A25
VSS	A27
VSS	A29
VSS	A33
VSS	A35
VSS	B2
VSS	B8
VSS	B13
VSS	B17
VSS	B21
VSS	B36
VSS	C5
VSS	C8
VSS	C13
VSS	C16
VSS	C17
VSS	C21
VSS	C23
VSS	C25
VSS	C27
VSS	C29
VSS	C31
VSS	C33
VSS	C37
VSS	D8
VSS	D13
VSS	D15
VSS	D17
VSS	D21
VSS	D23
VSS	D34
VSS	E1
VSS	E3
VSS	E13
VSS	E17
VSS	E21
VSS	E35
VSS	E37
VSS	F6
VSS	F8

Table 7-2. Intel® 82845G GMCH Ballout by Signal Name

Signal Name	Ball #
VSS	F14
VSS	F22
VSS	F24
VSS	F26
VSS	F28
VSS	F30
VSS	F32
VSS	G3
VSS	G9
VSS	G17
VSS	G21
VSS	G35
VSS	H6
VSS	H22
VSS	H32
VSS	J1
VSS	J3
VSS	J9
VSS	J17
VSS	J21
VSS	J23
VSS	J25
VSS	J27
VSS	J29
VSS	J35
VSS	J37
VSS	K24
VSS	K28
VSS	K32
VSS	L3
VSS	L29
VSS	L35
VSS	M6
VSS	M10
VSS	M32
VSS	N1
VSS	N3
VSS	N9
VSS	N29
VSS	N35
VSS	N37
VSS	P28
VSS	P32

Table 7-2. Intel® 82845G GMCH Ballout by Signal Name

Signal Name	Ball #
VSS	R3
VSS	R29
VSS	R35
VSS	T6
VSS	T10
VSS	T32
VSS	U1
VSS	U3
VSS	U9
VSS	U18
VSS	U20
VSS	U29
VSS	U35
VSS	U37
VSS	V17
VSS	V18
VSS	V20
VSS	V21
VSS	V28
VSS	V32
VSS	W3
VSS	W29
VSS	W34
VSS	W36
VSS	Y6
VSS	Y10
VSS	Y17
VSS	Y18
VSS	Y20
VSS	Y21
VSS	Y32
VSS	AA1
VSS	AA9
VSS	AA18
VSS	AA20
VSS	AA29
VSS	AA35
VSS	AA37
VSS	AB4
VSS	AB6
VSS	AB28
VSS	AB32
VSS	AC3

Table 7-2. Intel® 82845G GMCH Ballout by Signal Name

Signal Name	Ball #
VSS	AC29
VSS	AC35
VSS	AD32
VSS	AE1
VSS	AE9
VSS	AE29
VSS	AE35
VSS	AE37
VSS	AF6
VSS	AF8
VSS	AF28
VSS	AF32
VSS	AG3
VSS	AG4
VSS	AG5
VSS	AG29
VSS	AG35
VSS	AG37
VSS	AH16
VSS	AH20
VSS	AH24
VSS	AH28
VSS	AH30
VSS	AH32
VSS	AH36
VSS	AJ13
VSS	AJ17
VSS	AJ21
VSS	AJ25
VSS	AJ29
VSS	AJ33
VSS	AJ37
VSS	AK12
VSS	AL27
VSS	AL31
VSS	AL35
VSS	AM3
VSS	AM4
VSS	AM6
VSS	AM8
VSS	AM10
VSS	AM12
VSS	AM16

Table 7-2. Intel® 82845G GMCH Ballout by Signal Name

Signal Name	Ball #
VSS	AM20
VSS	AM24
VSS	AM28
VSS	AM32
VSS	AN1
VSS	AN3
VSS	AN5
VSS	AN7
VSS	AN33
VSS	AN35
VSS	AN37
VSS	AR1
VSS	AR3
VSS	AR5
VSS	AR7
VSS	AR9
VSS	AR11
VSS	AR13
VSS	AR15
VSS	AR17
VSS	AR19
VSS	AR21
VSS	AR23
VSS	AR25
VSS	AR27
VSS	AR29
VSS	AR31
VSS	AR33
VSS	AR35
VSS	AR37
VSS	AT2
VSS	AT36
VSS	AU3
VSS	AU7
VSS	AU11
VSS	AU15
VSS	AU23
VSS	AU27
VSS	AU31
VSS	AU35
VSSA_DAC	B15
VSSA_DAC	C14
VSYNC	C6

Table 7-2. Intel® 82845G GMCH Ballout by Signal Name

Signal Name	Ball #
VTT_DECAP	A31
VTT_DECAP	G37
VTT_DECAP	L37
VTT_DECAP	R37
VTT_DECAP	AC37
VTTFSB	B18
VTTFSB	B19
VTTFSB	B20
VTTFSB	C18
VTTFSB	C19
VTTFSB	C20
VTTFSB	D18
VTTFSB	D19
VTTFSB	D20
VTTFSB	E19
VTTFSB	F18
VTTFSB	F20
VTTFSB	G19
VTTFSB	H18
VTTFSB	H20
VTTFSB	J19
VTTFSB	K18
VTTFSB	K20
VTTFSB	K22
VTTFSB	K26
VTTFSB	M28
VTTFSB	T28
VTTFSB	Y28
VTTFSB	AD28

7.2 Package Information

The GMCH is in a 37.5 mm x 37.5 mm FC-BGA package with 1 mm ball pitch. Figure 7-3 and Figure 7-4 show the package dimensions.

Figure 7-3. Intel® 82845G GMCH Package Dimensions (Top and Side Views)

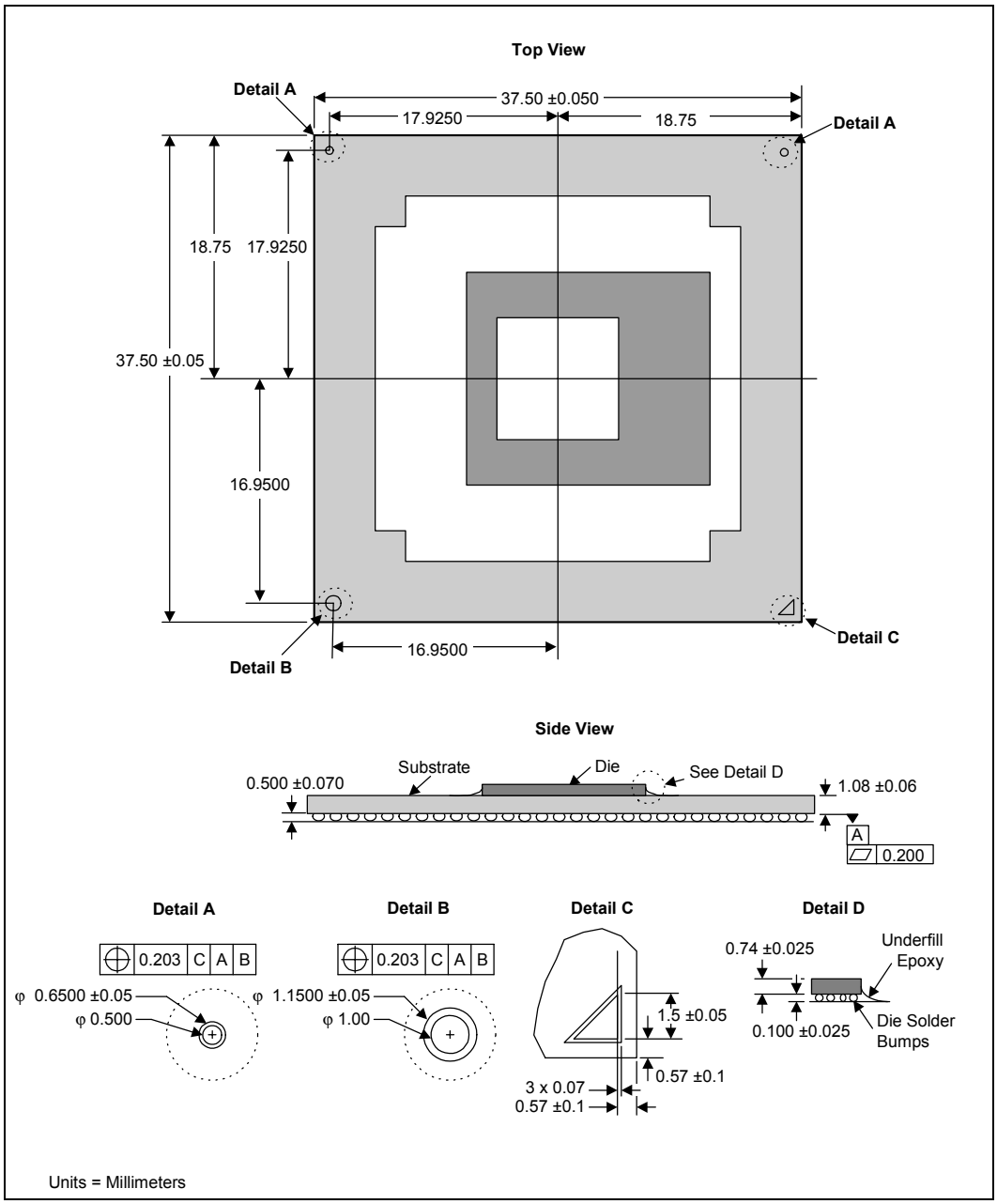

Figure 7-4. Intel® 82845G GMCH Package Dimensions (Bottom View)

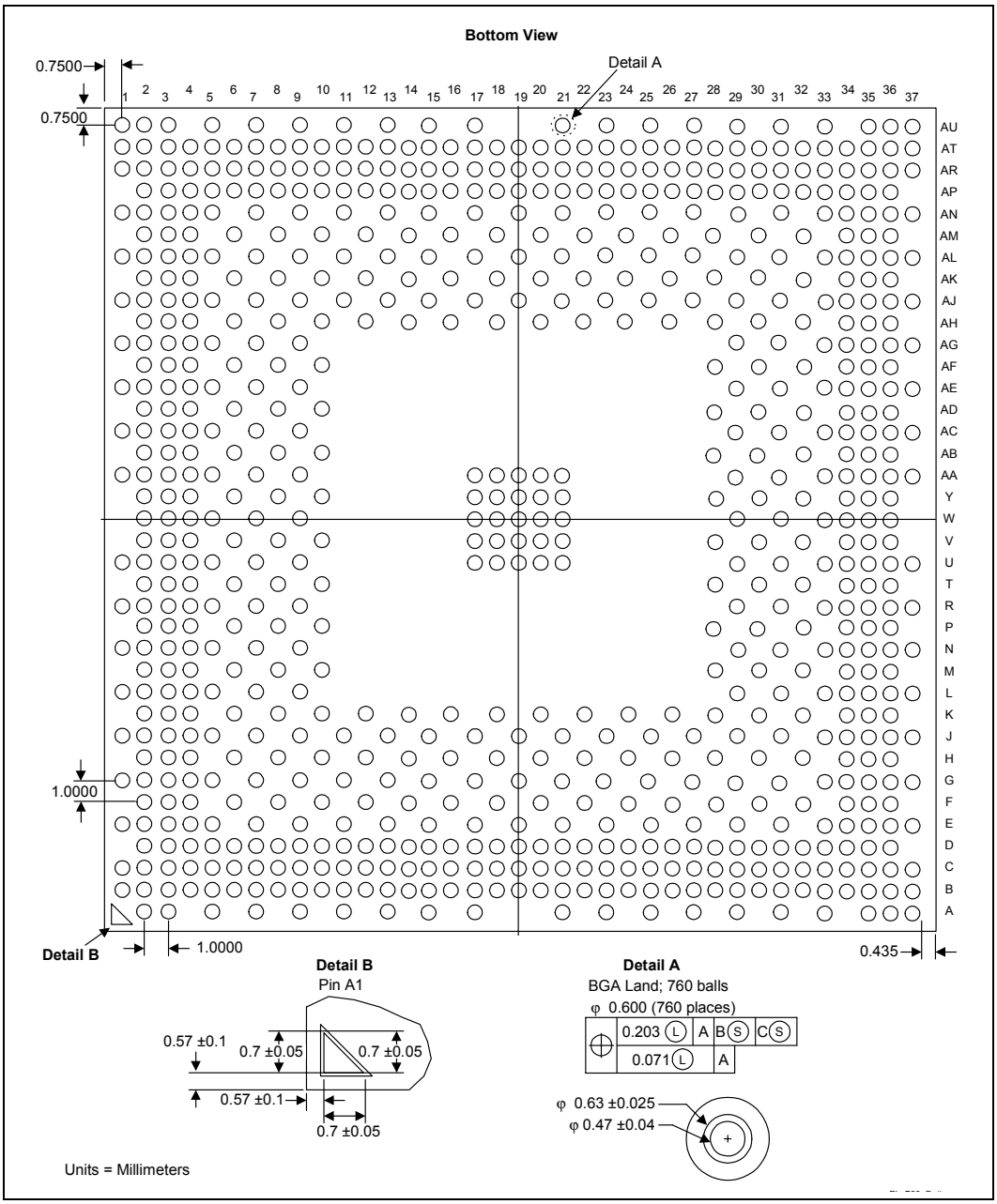

This page is intentionally left blank.

Testability 8

In the GMCH, testability for Automated Test Equipment (ATE) board level testing has been implemented as an XOR chain. An XOR-tree is a chain of XOR gates, each with one input pin connected to it.

8.1 XOR Test Mode Initialization

XOR test mode can be entered by driving GSBA[6] and GSBA[7] low, and TESTIN# low, and PWROK low, and RSTIN# low, then drive PWROK high, then RSTIN# high. XOR test mode via TESTIN# does not require a clock.

8.2 XOR Chain Definition

The GMCH has nine XOR chains. The XOR chain outputs are driven out on the DDR output pins (see Table 8-1).

Table 8-1. XOR Chain Output Pins

XOR Chain	DDR Output Pin Channel A	DDR Output Pin Channel B
0	SMAA_0	SMAA_7
1	SMAA_1	SMAA_8
2	SMAA_2	SMAA_9
3	SMAA_3	SMAA_10
4	SMAA_4	SMAA_11
5	SMAA_5	SMAA_12
6	SMAA_6	SWE#
7	SRAS#	SCAS#
8	SBA_0	SBA_1

Table 8-2, Table 8-3, and Table 8-4 show the XOR chain pin mappings and their monitors for the GMCH.

Note: Only AGP differential STROBEs are on different chains but in the same channel group. The rest of the interfaces' STROBEs are on the same chain, since they do not require opposite polarity at all the times. All XOR chains can be run in parallel except chains with AGP strobes. Thus, chain 0 and chain 1 cannot be run in parallel; similarly chain 2 and chain 3.

Note: The Channel A and Channel B output pins for each Chain show the same output.

Table 8-2. XOR Chains 0, 1, and 2 (Sheet 1 of 2)

XOR Chain 0 (42 inputs) Output pins: SMAA_0, SMAA_7		XOR Chain 1 (18 inputs) Output pins: SMAA_1, SMAA_8		XOR Chain 2 (25 inputs) Output pins: SMAA_2, SMAA_9	
Signal Name	**Ball #**	**Signal Name**	**Ball #**	**Signal Name**	**Ball #**
HI_5	AF4	GADSTB_0#	V8	MEM_SEL	Y2
HI_4	AD8	GREQ#	D5	RSVD	AA2
HI_7	AE5	GRBF#	G7	RSVD	AA3
HI_STBS	AD4	GPIPE#	H8	PSB_SEL	Y3
HI_STBF	AC4	GSBA_5	E2	RSVD	Y4
HI_6	AE4	GSBA_6	F3	GAD_18	K2
HI_2	AC7	GSBA_7	F2	GAD_20	M3
HI_1	AB8	GSBA_3	D2	GAD_16	P8
HI_3	AC5	GSBA_2	D3	GAD_21	L5
HI_10	AF2	GSBSTB#	E5	GAD_25	K3
HI_0	AA7	GSBA_4	E4	GAD_17	K4
HI_8	AF3	GSBA_1	C2	GAD_22	L4
HI_9	AE2	GSBA_0	C3	GAD_19	J2
GAD_2	W4	GST_0	C4	GAD_26	J4
GAD_3	W5	GST_2	B3	GADSTB_1	M8
GAD_1	V2	HSYNC	B7	GAD_29	H3
GAD_6	U2	DDCA_CLK	D7	GAD_23	H4
GAD_0	V4	DDCA_DATA	C7	GAD_27	J5
GAD_7	V3	**Output Pins**		GAD_28	J7
GAD_5	U4	SMAA_1	AN25	GAD_31	G4
GAD_4	U5	SMAA_8	AN17	GAD_24	G2
GADSTB_0	V8			GAD_30	K8
GAD_8	T2			GST_1	B4
GAD_10	T4			GGNT#	B5
GAD_9	T3			VSYNC	C6
GAD_12	R5			**Output Pins**	
GAD_15	P3			SMAA_2	AP23
GAD_11	R2			SMAA_9	AK16
GAD_13	R7				
GAD_14	T8				
GC/BE_0#	R4				
GC/BE_1#	N4				
GIRDY#	N7				
GPAR	P4				

Table 8-2. XOR Chains 0, 1, and 2 (Sheet 2 of 2)

XOR Chain 0 (42 inputs) Output pins: SMAA_0, SMAA_7		XOR Chain 1 (18 inputs) Output pins: SMAA_1, SMAA_8		XOR Chain 2 (25 inputs) Output pins: SMAA_2, SMAA_9	
Signal Name	**Ball #**	**Signal Name**	**Ball #**	**Signal Name**	**Ball #**
GSTOP#	P2				
GFRAME#	M4				
GDEVSEL#	N2				
GTRDY#	N5				
GWBF#	G5				
GC/BE_2#	M2				
GC/BE_3#	H2				
GSBSTB	F4				
Output Pins					
SMAA_0	AL25				
SMAA_7	AP17				

Table 8-3. XOR Chains 3, 4, and 5 (Sheet 1 of 2)

XOR Chain 3 (44 inputs) Output pins: SMAA_3, SMAA_10		XOR Chain 4 (51 inputs) Output pins: SMAA_4, SMAA_11		XOR Chain 5 (46 inputs) Output pins: SMAA_5, SMAA_12	
Signal Name	**Ball #**	**Signal Name**	**Ball #**	**Signal Name**	**Ball #**
BPRI#	M34	DINV_1#	C35	SDQ_59	AJ36
DEFER#	N36	HD_29#	B35	SDQ_62	AK35
RS_1#	U34	HD_27#	E33	SDQ_58	AK36
HADSTB_1#	AF30	HD_25#	D36	SDQ_63	AK34
GADSTB_1#	L7	HD_31#	C36	SDM_7	AL34
HD_61#	B22	HD_30#	G31	SDQ_57	AM36
HD_55#	C24	HD_19#	D35	SDQ_61	AM35
HD_56#	B23	HDSTBP_1#	J34	SDQ_60	AP36
HD_54#	B25	HDSTBN_1#	G33	SDQ_56	AN36
HD_57#	B24	HD_28#	E34	SDQ_51	P35
HD_59#	C22	HD_24#	F35	SCS_1#	AP31
HD_58#	E23	HD_21#	F34	SDQ_55	AT35
HD_51#	B26	HD_20#	F36	SDQ_54	AP34
HDSTBP_3#	E25	HD_17#	G36	SDQ_50	AR36
HDSTBN_3#	D25	HD_22#	E36	SDM_6	AR34
HD_62#	D24	HD_26#	H35	SDQ_49	AT32
HD_50#	D28	HD_16#	G34	SDQ_53	AT33
HD_48#	B27	HD_18#	J33	SDQ_48	AR32
HD_52#	G27	HD_23#	H34	SDQ_52	AP32
HD_63#	G23	HD_9#	K34	SCS_0#	AL29
HD_49#	D26	HD_15#	H36	SDQ_47	AT31
DINV_3#	C26	HD_14#	K35	SDQ_43	AP30
HD_53#	H26	HD_10#	K36	SDQ_42	AR30
HD_60#	G25	HD_8#	J36	SDQ_41	AT28
HD_45#	B29	HD_6#	L36	SDQ_44	AT27
HD_47#	C28	HD_5#	L33	SDM_5	AP28
HD_42#	B31	HD_12#	M35	SDQ_46	AT30
HD_46#	E27	HD_3#	N34	SDQ_45	AR28
HD_43#	B32	HD_13#	L34	SDQ_40	AP26
DINV_2#	B33	HD_11#	M30	SDQ_35	AT26
HD_44#	B30	HDSTBP_0#	L31	SDQ_39	AR26
HD_34#	D29	HDSTBN_0#	N31	SDQ_38	AT25
HD_38#	B34	DINVB_0	N33	SDQ_34	AP24
HDSTBP_2#	E29	HD_1#	R33	SDM_4	AT24
HDSTBN_2#	C30	HD_7#	P35	SDQ_37	AT23

Table 8-3. XOR Chains 3, 4, and 5 (Sheet 2 of 2)

XOR Chain 3 (44 inputs) Output pins: SMAA_3, SMAA_10		XOR Chain 4 (51 inputs) Output pins: SMAA_4, SMAA_11		XOR Chain 5 (46 inputs) Output pins: SMAA_5, SMAA_12	
Signal Name	**Ball #**	**Signal Name**	**Ball #**	**Signal Name**	**Ball #**
CPURST#	D22	HD_4#	R31	SDQ_33	AP22
HD_39#	D31	HD_0#	T30	SDQ_32	AR22
HD_33#	D30	HD_2#	R34	SDQ_36	AT22
HD_37#	C34	HIT#	P36	SRCVEN_OUT#	AK24
HD_36#	D32	RS_2#	P34	SRCVEN_IN#	AL23
HD_41#	C32	HITM#	M36	SCMD_CLK_2#	AL33
HD_35#	E31	RS_0#	R36	SCMD_CLK_0#	AK22
HD_32#	D33	BNR#	T34	SCMD_CLK_2	AM34
HD_40#	G29	DRDY#	U36	SCMD_CLK_0	AL21
Output Pins		HLOCK#	T35	SCMD_CLK_4	AP9
SMAA_3	AK20	BREQ0#	U33	SCMD_CLK_4#	AN9
SMAA_10	AK26	DBSY#	U31	**Output Pins**	
		HTRDY#	V30	SMAA_5	AL17
		ADS#	T36	SMAA_12	AN15
		HREQ_0#	V36		
		HREQ_4#	W35		
		Output Pins			
		SMAA_4	AL19		
		SMAA_11	AL15		

Table 8-4. XOR Chains 6, 7, and 8 (Sheet 1 of 2)

XOR Chain 6 (20 inputs) Output pins: SMAA_6, SWE#		XOR Chain 7 (40 inputs) Output pins: SRAS#, SCAS#		XOR Chain 8 (33 inputs) Output pins: SBA_0, SBA_1	
Signal Name	**Ball #**	**Signal Name**	**Ball #**	**Signal Name**	**Ball #**
SDQS_7	AL36	SDQ_31	AR20	HA_7#	Y36
SDQS_6	AT34	SDM_3	AR18	HA_6#	V34
SDQS_5	AT29	SDQ_30	AP18	HREQ_2#	W33
SCS_3#	AN31	SDQ_26	AT18	HA_9#	Y35
SCS_2#	AK30	SDQ_27	AT19	HA_13#	Y34
SDQS_4	AR24	SDQS_3	AT17	HA_14#	AB36
SMAB_2	AN23	SDQ_29	AT16	HA_10#	AA36
SCMD_CLK_5#	AN34	SDQ_24	AT15	HA_4#	AA33
SCMD_CLK_5	AP33	SDQ_25	AP16	HREQ_3#	AA34
SCMD_CLK_3#	AN21	SDQ_28	AR16	HA_3#	W31
SCMD_CLK_1	AN11	SDQ_22	AR14	HADSTB_0#	AB35
SCMD_CLK_3	AP21	SDQ_19	AT14	HA_12#	AB34
SCMD_CLK_1#	AP11	SDQS_2	AT12	HA_11#	AC34
SMAB_5	AK18	SDM_2	AP12	HREQ_1#	AA31
SMAB_1	AP25	SDQ_23	AP14	HA_8#	AC33
SMAB_4	AN19	SDQ_21	AR12	HA_5#	AB30
SCKE_0	AP13	SDQ_20	AT10	HA_16#	AC31
SCKE_1	AN13	SDQ_17	AT11	HA_15#	AC36
SCKE_2	AK14	SDQ_16	AP10	HA_18#	AD36
SCKE_3	AL13	SDQ_18	AT13	HA_22#	AE36
Output Pins		SDQ_11	AR10	HA_19#	AD35
SMAA_6	AP19	SDQ_14	AT8	HA_20#	AE34
SWE#	AP29	SDQ_10	AT9	HA_24#	AE33
		SDM_1	AR8	HA_21#	AD34
		SDQS_1	AT7	HA_25#	AF34
		SDQ_15	AP8	HA_23#	AF36
		SDQ_12	AT6	HA_27#	AG36
		SDQ_13	AP6	HA_17#	AF35
		SDQ_9	AR6	HA_30#	AG33
		SDQ_8	AT5	HA_28#	AE31
		SDQ_7	AT4	HA_31#	AG31
		SDQ_3	AP5	HA_29#	AH35
		SDQ_5	AP3	HA_26#	AG34
		SDQ_6	AR4	**Output Pins**	
		SDM_0	AP4	SBA_0	AN27
		SDQ_4	AN2	SBA_1	AP27
		SDQ_0	AN4		
		SDQS_0	AR2		

Table 8-4. XOR Chains 6, 7, and 8 (Sheet 2 of 2)

XOR Chain 6 (20 inputs) Output pins: SMAA_6, SWE#		XOR Chain 7 (40 inputs) Output pins: SRAS#, SCAS#		XOR Chain 8 (33 inputs) Output pins: SBA_0, SBA_1	
Signal Name	**Ball #**	**Signal Name**	**Ball #**	**Signal Name**	**Ball #**
		SDQ_2	AT3		
		SDQ_1	AP2		
		Output Pins			
		SRAS#	AK28		
		SCAS#	AN29		

8.3 XOR Chains Excluded Pins

Table 8-5 lists the signals that are excluded from the XOR chains.

Table 8-5. XOR Chains Excluded Pins

Signal Name	Ball #	Signal Name	Ball #
RSVD	AB3	HY_SWING	Y30
RSVD	AA4	RSTIN#	AJ31
RSVD	W7	SMY_RCOMP	AJ34
RSVD	Y8	SMX_RCOMP	AD16, AF10
BLUE	G15	REFSET	B16
BLUE#	H16	VSSA_DAC	B15, C14
GREEN	E15	VCCA_DAC	A15, B14
GREEN#	F16	HD_VREF_2	D27
RED	C15	HX_RCOMP	B28
RED#	D16	HX_SWING	H28
RSVD	AA5	HD_VREF_1	H24
SM_VREF	AM2	VCCA_FSB	A17
VCCA_HI	AD10, AD14	HCLKN	J31
GCLKIN	AE7	HCLKP	K30
HI_VREF	AD3	HD_VREF_0	H30
HI_RCOMP	AC2	HCC_VREF	P30
HI_SWING	AD2	HA_VREF	AD30
RSVD	AB2	HY_RCOMP	V35
AGP_VREF	W2	PWROK	E7
AGP_RCOMP	L2	DREFCLK	D14

Intel® 82845GL/82845GV GMCH 9

Chapter 1 through Chapter 8 of this datasheet described the 82845G component. The first eight chapters also apply to the 82845GL/82845GV with the differences noted in this chapter. This chapter describes the differences between the 82845G and 82845GL/82845GV components. Figure 9-1 is a system block diagram of an 845GL/845GV chipset-based system.

The information in this chapter applies to both the 82845GL and 82845GV components, unless otherwise noted. Also, unless otherwise noted in this chapter, GMCH applies to both the 82845GL and 82845GV components.

Figure 9-1. Intel® 845GL/845GV Chipset System Block Diagram

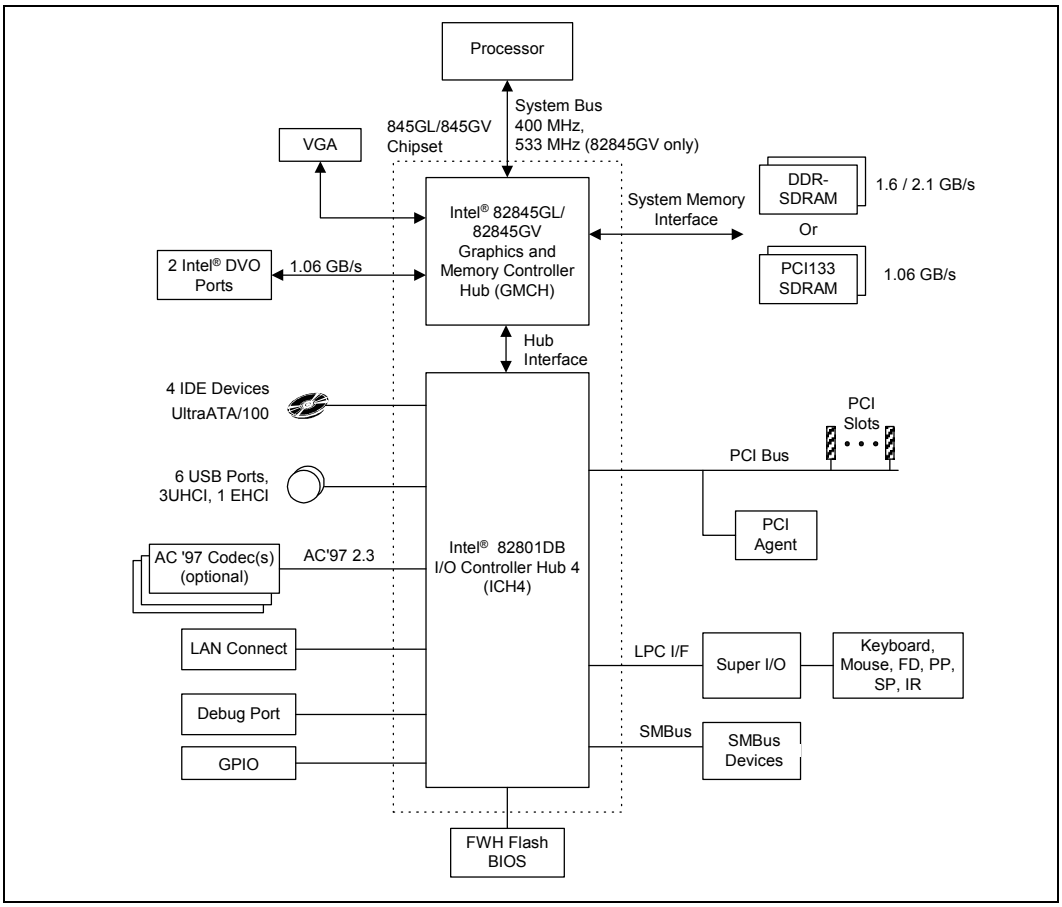

9.1 Processor System Bus (PSB) Frequency

82845GL: The 82845GL GMCH supports PSB frequency of 400 MHz (100 MHz bus clock) only. References in the main body of this datasheet to a PSB frequency of 533 MHz are not applicable to the 82845GL.

82845GV: The 82845GV GMCH supports Processor System Bus (PSB) frequencies of 400 MHz (100 MHz bus clock) and 533 MHz (133 MHz bus clock). This is the same as the 82845G.

9.2 No AGP Interface

The 82845GL and 82845GV do not have an AGP interface. References to AGP in this document only apply to the 82845G component. For example, Chapter 2 describes how the 82845G DVO signals are multiplexed with the AGP signals. For the 82845GL/82845GV, the DVO signals are NOT multiplexed. In addition, AGP related registers are NOT in the 82845GL/82845GV components (see Section 9.4).

9.3 Intel® 82845G and Intel® 82845GL/82845GV Signal Differences

The 82845GL and 82845GV have the same signals. The following lists the signal differences between the 82845G and the 82845GL/82845GV:

- ADD_DETECT signal functionality is slightly different between the 82845G and the82845GL/82845GV. For the 82845GL/82845GV, replace the ADD_DETECT signal description in Section 2.4.5 with the following:

Signal Name	Type	Description
GPAR/ ADD_DETECT	I/O AGP	**PAR:** Same as PCI. Not used on AGP transactions but used during PCI transactions as defined by the *PCI Local Bus Specification, Revision 2.1*. **ADD_DETECT:** This signal acts as a strap and indicates whether the interface is in DVO mode. The 82845GL/82845GV GMCH has an internal pull-up on this signal that will naturally pull it high. If a DVO is utilized, the signal should be pulled low and the DVO select bit in the GMCHCFG register will be set to DVO mode. Motherboards that use this interface in a DVO down scenario should have a pull-down resistor on ADD_DETECT.

- There are no AGP signals on the 82845GL/82845GV. The 82845GL/82845GV DVO signals are not multiplexed. Section 2.5.1, *Intel® DVO Signals Name to AGP Signal Name Pin Mapping* does not apply to the 82845GL/82845GV.

9.3.1 Functional Straps (82845GL only)

In Section 2.10, *Functional Straps*, the PSBSEL signal description is replaced by the following:

Signal Name	Type	Description
PSBSEL	I	**PSB Frequency Select:** The PSBSEL is tied to the external BSEL resistor-divider circuitry. The value of the PSBSEL pin reflects the PSB frequency. The PSB runs at 400 MHz when PSBSEL is a 0. The 82845GL does not support PSB frequency of 533 MHz and a PSBSEL value of 1 would not allow the board to boot.

9.4 Intel® 82845G and Intel® 82845GL/82845GV Register Differences

Chapter 3 describes the registers for the 82845G GMCH. This section describes the changes to Chapter 3 for the 82845GL/82845GV GMCH. The differences are in the Device 0 and Device 1 register sets. The Device 2 registers are the same for the 82845G and 82845GL/82845GV.

9.4.1 DRAM Controller/Host-Hub Interface Device Registers (Device 0)

9.4.1.1 Device 0 Registers Not in 82845GL/82845GV

The following registers are not in the 82845GL82845GV and the address locations are Intel Reserved.

APBASE — Aperture Base Configuration Register (Device 0)

Address Offset: 10–13h
Size: 32 bits

AGPM — AGP Miscellaneous Configuration Register (Device 0)

Address Offset 51h
Size: 8 bits

ACAPID — AGP Capability Identifier Register (Device 0)

Address Offset A0–A3h
Size: 32 bits

AGPSTAT — AGP Status Register (Device 0)

Address Offset A4–A7h
Size: 32 bits

AGPCMD — AGP Command Register (Device 0)

Address Offset A8–ABh
Size: 32 bits

AGPCTRL — AGP Control Register (Device 0)

Address Offset B0–B3h
Size: 32 bits

APSIZE — Aperture Size Register (Device 0)

Address Offset B4h
Size: 8 bits

ATTBASE — Aperture Translation Table Register (Device 0)

Address Offset B8–BBh
Size: 32 bits

AMTT — AGP MTT Control Register (Device 0)

Address Offset BC–BFh
Size: 8 bits

LPTT — AGP Low Priority Transaction Timer Register (Device 0)

Address Offset BDh
Size: 8 bits

9.4.1.2 Device 0 Register Bit Differences

The registers described in this section are in both the 82845G and 82845GL/82845GV. However, some of the register bits have different functions/operations between the components. Only the bits that are different are shown in this section. Thus, the bit descriptions shown in this section only apply to the 82845GL or 82845GV. The remaining register bits are the same for all three components and are described in Chapter 3.

GC—Graphics Control Register (Device 0)

Address Offset 52h
Default Value 0000_0000b
Access RO
Size: 8 bits

Bits	Description
3	**Integrated Graphics Disable (IGDIS).** The GMCH's Device 1 is disabled such that all configuration cycles to Device 1 flow through to the hub interface. Also, the Next_Pointer field in the CAPREG register (Device 0, Offset E4h) is RO at 00h. This enables internal graphics capability. 0 = Enable. Internal Graphics is enabled (default)

GMCHCFG—GMCH Configuration Register (Device 0)

Address Offset	C6–C7h
Default Value	0C01h
Access	R/W, RO
Size:	16 bits

Bits	Description
12 (82845GL Only)	**Core/PSB Frequency Select (PSBFREQ)—RO.** The default value of this bit is set by the strap assigned to pin PSBSEL and is latched at the rising edge of PWROK. 0 = PSB frequency is 400 MHz (PSBSEL sampled high on PWROK assertion) 1 = Indicates a processor running 533 MHz on the board. For the 82845GL, the board will not boot.
3	**AGP Mode (AGP/DVO#)—RO.** This bit reflects the ADD_DETECT strap value. This strap bit determines the function of the AGP I/O signal. 0 = 2xDVO 1 = no DVO mode, internal graphics only. When the strap is sampled low, this bit will be a 0 and DVO mode will be selected. When the strap is sampled high, this bit will be a 1 and DVO mode will not be selected, and the internal graphics device would be running. Note that when this bit is set to 0 (DVO mode), Device 1 is disabled (configuration cycles fall-through to the hub interface) and the Next Pointer field in CAPREG will be hardwired to zeros.

ERRSTS—Error Status Register (Device 0)

Address Offset	C8–C9h
Default Value	0000h
Access	R/WC
Size:	16 bits

Bits	Description
4:0	Intel Reserved

ERRCMD—Error Command Register (Device 0)

Address Offset	CA–CBh
Default Value	0000h
Access	RO, R/W
Size:	16 bits

Bits	Description
4:0	Intel Reserved

CAPREG—Capability Identification Register (Device 0)

Address Offset	E4h–E8h
Default Value	0x_x105_A009h
Access	RO
Size:	40 bits

Bits	Description
15:8	**Next_Pointer.** This field has the value A0h pointing to the next capabilities register, AGP Capability Identifier Register (ACAPID). Since AGP is disabled (IGDIS = 0), this becomes the last pointer in the device, and it is set to 00h signifying the end of the capabilities linked list.

9.4.2 Host-to-AGP Bridge Registers (Device 1)

Device 1 does not exist on the 82845GL/82845GV components. The Device 1 registers described in Chapter 3. are not in the 82845GL/82845GV. For the 82845GL/82845GV, these register address locations are Intel Reserved.

9.5 Synchronous Display Differences

The synchronous display is different between the 82845G and 82845GL\82845GV. For the 82845GL\82845GV, replace Section 4.5.2.2, *Synchronous Display* with the following:

Synchronous Display

Microsoft Windows 98 and Windows 2000 have enabled support for multi-monitor display. Synchronous mode will display the same information on multiple displays.

Since the GMCH has several display ports available for its single pipe, it can support synchronous display on two displays unless one of the displays is a TV. No synchronous display is available when a TV is in use. The GMCH does not support two synchronous digital displays. The GMCH cannot drive multiple displays concurrently (different data or timings). Since the GMCH does not support AGP, it is incapable of operating in parallel with an external AGP device. The GMCH can, however, work in conjunction with a PCI graphics adapter.

9.6 Intel® 82845GL\82845GV GMCH Ballout

Table 9-1 provides the 82845GL\82845GV ballout arranged alphabetically by signal name. The differences between the ballout list in this chapter and the ballout list in Chapter 7 is that the AGP signals have been replaced with their corresponding DVO signal names. Since not all 82845G AGP signals are multiplexed, the remaining non-multiplexed 82845G AGP signal ballouts are shown in Table 9-1 as No Connect (NC).

Table 9-1. Intel® 82845GL/ 82845GV Ballout by Signal Name

Signal Name	Ball#
ADS#	T36
DVOB_CRCOMP	L2
AGP_VREF	W2
BLUE	G15
BLUE#	H16
BNR#	T34
BPRI#	M34
BREQ0#	U33
CPURST#	D22
DBSY#	U31
DDCA_CLK	D7
DDCA_DATA	C7
DEFER#	N36
DINV_0#	N33
DINV_1#	C35
DINV_2#	B33
DINV_3#	C26
DRDY#	U36
DREFCLK	D14
DVOB_HSYNC	V4
DVOB_VSYNC	V2
DVOB_D1	W4
DVOB_D0	W5
DVOB_D3	U5
DVOB_D2	U4
DVOB_D5	U2
DVOB_D4	V3
DVOB_D6	T2
DVOB_D9	T3
DVOB_D8	T4
DVOB_D11	R2
DVOB_D10	R5
DVOBC_CLKINT#	R7
DVOB_FLDSTL	T8
MDDC_CLK	P3
DVOC_VSYNC	P8
DVOC_HSYNC	K4

Table 9-1. Intel® 82845GL/ 82845GV Ballout by Signal Name

Signal Name	Ball#
DVOC_BLANK#	K2
DVOC_D0	J2
DVOC_D1	M3
DVOC_D2	L5
DVOC_D3	L4
DVOC_D4	H4
DVOC_D7	G2
DVOC_D6	K3
DVOC_D9	J4
DVOC_D8	J5
DVOC_D11	J7
DVOC_D10	H3
DVOBC_INTR#	K8
DVOC_FLDSTL	G4
DVOB_CLK	V8
DVOB_CLK#	U7
DVOC_CLK	M8
DVOC_CLK#	L7
DVOB_D7	R4
DVOB_BLANK#	N4
GCBE_2#	M2
DVOC_D5	H2
GCLKIN	AE7
MI2C_DATA	N2
MDVI_DATA	M4
MI2C_CLK	N7
GPAR	P4
GREEN	E15
GREEN#	F16
ADDID0	C3
ADDID1	C2
ADDID2	D3
ADDID3	D2
ADDID4	E4
ADDID5	E2
ADDID6	F3
ADDID7	F2

Table 9-1. Intel® 82845GL/ 82845GV Ballout by Signal Name

Signal Name	Ball#
MDDC_DATA	P2
MDVI_CLK	N5
HA_3#	W31
HA_4#	AA33
HA_5#	AB30
HA_6#	V34
HA_7#	Y36
HA_8#	AC33
HA_9#	Y35
HA_10#	AA36
HA_11#	AC34
HA_12#	AB34
HA_13#	Y34
HA_14#	AB36
HA_15#	AC36
HA_16#	AC31
HA_17#	AF35
HA_18#	AD36
HA_19#	AD35
HA_20#	AE34
HA_21#	AD34
HA_22#	AE36
HA_23#	AF36
HA_24#	AE33
HA_25#	AF34
HA_26#	AG34
HA_27#	AG36
HA_28#	AE31
HA_29#	AH35
HA_30#	AG33
HA_31#	AG31
HA_VREF	AD30
HADSTB_0#	AB35
HADSTB_1#	AF30
HCC_VREF	P30
HCLKN	J31
HCLKP	K30

Table 9-1. Intel® 82845GL/82845GV Ballout by Signal Name

Signal Name	Ball#
HD_0#	T30
HD_1#	R33
HD_2#	R34
HD_3#	N34
HD_4#	R31
HD_5#	L33
HD_6#	L36
HD_7#	P35
HD_8#	J36
HD_9#	K34
HD_10#	K36
HD_11#	M30
HD_12#	M35
HD_13#	L34
HD_14#	K35
HD_15#	H36
HD_16#	G34
HD_17#	G36
HD_18#	J33
HD_19#	D35
HD_20#	F36
HD_21#	F34
HD_22#	E36
HD_23#	H34
HD_24#	F35
HD_25#	D36
HD_26#	H35
HD_27#	E33
HD_28#	E34
HD_29#	B35
HD_30#	G31
HD_31#	C36
HD_32#	D33
HD_33#	D30
HD_34#	D29
HD_35#	E31
HD_36#	D32

Table 9-1. Intel® 82845GL/82845GV Ballout by Signal Name

Signal Name	Ball#
HD_37#	C34
HD_38#	B34
HD_39#	D31
HD_40#	G29
HD_41#	C32
HD_42#	B31
HD_43#	B32
HD_44#	B30
HD_45#	B29
HD_46#	E27
HD_47#	C28
HD_48#	B27
HD_49#	D26
HD_50#	D28
HD_51#	B26
HD_52#	G27
HD_53#	H26
HD_54#	B25
HD_55#	C24
HD_56#	B23
HD_57#	B24
HD_58#	E23
HD_59#	C22
HD_60#	G25
HD_61#	B22
HD_62#	D24
HD_63#	G23
HDSTB_N0#	N31
HDSTB_N1#	G33
HDSTB_N2#	C30
HDSTB_N3#	D25
HDSTB_P0#	L31
HDSTB_P1#	J34
HDSTB_P2#	E29
HDSTB_P3#	E25
HDVREF_0	H30
HDVREF_1	H24

Table 9-1. Intel® 82845GL/82845GV Ballout by Signal Name

Signal Name	Ball#
HDVREF_2	D27
HI_0	AA7
HI_1	AB8
HI_2	AC7
HI_3	AC5
HI_4	AD8
HI_5	AF4
HI_6	AE4
HI_7	AE5
HI_8	AF3
HI_9	AE2
HI_10	AF2
HI_RCOMP	AC2
HI_STBF	AC4
HI_STBS	AD4
HI_SWING	AD2
HI_VREF	AD3
HIT#	P36
HITM#	M36
HLOCK#	T35
HREQ_0#	V36
HREQ_1#	AA31
HREQ_2#	W33
HREQ_3#	AA34
HREQ_4#	W35
HSYNC	B7
HTRDY#	V30
HX_RCOMP	B28
HX_SWING	H28
HY_RCOMP	V35
HY_SWING	Y30
MEM_SEL	Y2
NC	A2
NC	A36
NC	B1
NC	B37
NC	AH34

Table 9-1. Intel® 82845GL/ 82845GV Ballout by Signal Name

Signal Name	Ball#
NC	AJ35
NC	AT1
NC	AT37
NC	AU1
NC	AU2
NC	AU36
NC	AU37
NC	B5
NC	H8
NC	G7
NC	D5
NC	F4
NC	E5
NC	C4
NC	B4
NC	B3
NC	G5
PSB_SEL	Y3
PWROK	E7
RED	C15
RED#	D16
REFSET	B16
RS_0#	R36
RS_1#	U34
RS_2#	P34
RSTIN#	AJ31
RSVD	A37
RSVD	W7
RSVD	Y4
RSVD	Y8
RSVD	AA2
RSVD	AA3
RSVD	AA4
RSVD	AA5
RSVD	AB3
SBA_0	AN27
SBA_1	AP27

Table 9-1. Intel® 82845GL/ 82845GV Ballout by Signal Name

Signal Name	Ball#
SCAS#	AN29
SCKE_0	AP13
SCKE_1	AN13
SCKE_2	AK14
SCKE_3	AL13
SCMDCLK_0	AL21
SCMDCLK_0#	AK22
SCMDCLK_1	AN11
SCMDCLK_1#	AP11
SCMDCLK_2	AM34
SCMDCLK_2#	AL33
SCMDCLK_3	AP21
SCMDCLK_3#	AN21
SCMDCLK_4	AP9
SCMDCLK_4#	AN9
SCMDCLK_5	AP33
SCMDCLK_5#	AN34
SCS_0#	AL29
SCS_1#	AP31
SCS_2#	AK30
SCS_3#	AN31
SDM_0	AP4
SDM_1	AR8
SDM_2	AP12
SDM_3	AR18
SDM_4	AT24
SDM_5	AP28
SDM_6	AR34
SDM_7	AL34
SDQ_0	AN4
SDQ_1	AP2
SDQ_2	AT3
SDQ_3	AP5
SDQ_4	AN2
SDQ_5	AP3
SDQ_6	AR4
SDQ_7	AT4

Table 9-1. Intel® 82845GL/ 82845GV Ballout by Signal Name

Signal Name	Ball#
SDQ_8	AT5
SDQ_9	AR6
SDQ_10	AT9
SDQ_11	AR10
SDQ_12	AT6
SDQ_13	AP6
SDQ_14	AT8
SDQ_15	AP8
SDQ_16	AP10
SDQ_17	AT11
SDQ_18	AT13
SDQ_19	AT14
SDQ_20	AT10
SDQ_21	AR12
SDQ_22	AR14
SDQ_23	AP14
SDQ_24	AT15
SDQ_25	AP16
SDQ_26	AT18
SDQ_27	AT19
SDQ_28	AR16
SDQ_29	AT16
SDQ_30	AP18
SDQ_31	AR20
SDQ_32	AR22
SDQ_33	AP22
SDQ_34	AP24
SDQ_35	AT26
SDQ_36	AT22
SDQ_37	AT23
SDQ_38	AT25
SDQ_39	AR26
SDQ_40	AP26
SDQ_41	AT28
SDQ_42	AR30
SDQ_43	AP30
SDQ_44	AT27

Table 9-1. Intel® 82845GL/ 82845GV Ballout by Signal Name

Signal Name	Ball#
SDQ_45	AR28
SDQ_46	AT30
SDQ_47	AT31
SDQ_48	AR32
SDQ_49	AT32
SDQ_50	AR36
SDQ_51	AP35
SDQ_52	AP32
SDQ_53	AT33
SDQ_54	AP34
SDQ_55	AT35
SDQ_56	AN36
SDQ_57	AM36
SDQ_58	AK36
SDQ_59	AJ36
SDQ_60	AP36
SDQ_61	AM35
SDQ_62	AK35
SDQ_63	AK34
SDQS_0	AR2
SDQS_1	AT7
SDQS_2	AT12
SDQS_3	AT17
SDQS_4	AR24
SDQS_5	AT29
SDQS_6	AT34
SDQS_7	AL36
SM_VREF	AM2
SMAA_0	AL25
SMAA_1	AN25
SMAA_2	AP23
SMAA_3	AK20
SMAA_4	AL19
SMAA_5	AL17
SMAA_6	AP19
SMAA_7	AP17
SMAA_8	AN17

Table 9-1. Intel® 82845GL/ 82845GV Ballout by Signal Name

Signal Name	Ball#
SMAA_9	AK16
SMAA_10	AK26
SMAA_11	AL15
SMAA_12	AN15
SMAB_1	AP25
SMAB_2	AN23
SMAB_4	AN19
SMAB_5	AK18
SMX_RCOMP	AF10
SMY_RCOMP	AJ34
SRAS#	AK28
SRCVEN_IN#	AL23
SRCVEN_OUT#	AK24
SWE#	AP29
TESTIN#	AB2
VCC	A9
VCC	A11
VCC	B9
VCC	B10
VCC	B11
VCC	B12
VCC	C9
VCC	C10
VCC	C11
VCC	C12
VCC	D9
VCC	D10
VCC	D11
VCC	D12
VCC	E9
VCC	E11
VCC	F10
VCC	F12
VCC	G11
VCC	G13
VCC	H10
VCC	H12

Table 9-1. Intel® 82845GL/ 82845GV Ballout by Signal Name

Signal Name	Ball#
VCC	H14
VCC	J11
VCC	J13
VCC	J15
VCC	K10
VCC	K12
VCC	K14
VCC	K16
VCC	U17
VCC	U19
VCC	U21
VCC	V19
VCC	W17
VCC	W18
VCC	W19
VCC	W20
VCC	W21
VCC	Y19
VCC	AA17
VCC	AA19
VCC	AA21
VCCA_DAC	A15
VCCA_DAC	B14
VCCA_DPLL	A13
VCCA_FSB	A17
VCCA_HI	AD10
VCCA_SM	AG1
VCCA_SM	AG2
VCCAGP	A3
VCCAGP	A7
VCCAGP	C1
VCCAGP	D4
VCCAGP	D6
VCCAGP	G1
VCCAGP	K6
VCCAGP	L1
VCCAGP	L9

Table 9-1. Intel® 82845GL/ 82845GV Ballout by Signal Name

Signal Name	Ball#
VCCAGP	P6
VCCAGP	P10
VCCAGP	R1
VCCAGP	R9
VCCAGP	V6
VCCAGP	V10
VCCAGP	W9
VCCAGP	AB10
VCCGPIO	B6
VCCHI	AC1
VCCHI	AC9
VCCHI	AD6
VCCHI	AE3
VCCQSM	AT20
VCCQSM	AT21
VCCQSM	AU21
VCCSM	AG7
VCCSM	AG9
VCCSM	AH2
VCCSM	AH3
VCCSM	AH4
VCCSM	AH6
VCCSM	AH8
VCCSM	AH10
VCCSM	AH12
VCCSM	AH14
VCCSM	AH18
VCCSM	AH22
VCCSM	AH26
VCCSM	AJ1
VCCSM	AJ2
VCCSM	AJ3
VCCSM	AJ4
VCCSM	AJ5
VCCSM	AJ7
VCCSM	AJ9
VCCSM	AJ11

Table 9-1. Intel® 82845GL/ 82845GV Ballout by Signal Name

Signal Name	Ball#
VCCSM	AJ15
VCCSM	AJ19
VCCSM	AJ23
VCCSM	AJ27
VCCSM	AK2
VCCSM	AK3
VCCSM	AK4
VCCSM	AK6
VCCSM	AK8
VCCSM	AK10
VCCSM	AK32
VCCSM	AL1
VCCSM	AL2
VCCSM	AL3
VCCSM	AL4
VCCSM	AL5
VCCSM	AL7
VCCSM	AL9
VCCSM	AL11
VCCSM	AL37
VCCSM	AM14
VCCSM	AM18
VCCSM	AM22
VCCSM	AM26
VCCSM	AM30
VCCSM	AP7
VCCSM	AP15
VCCSM	AP20
VCCSM	AU5
VCCSM	AU9
VCCSM	AU13
VCCSM	AU17
VCCSM	AU25
VCCSM	AU29
VCCSM	AU33
VSS	A5
VSS	A21

Table 9-1. Intel® 82845GL/ 82845GV Ballout by Signal Name

Signal Name	Ball#
VSS	A23
VSS	A25
VSS	A27
VSS	A29
VSS	A33
VSS	A35
VSS	B2
VSS	B8
VSS	B13
VSS	B17
VSS	B21
VSS	B36
VSS	C5
VSS	C8
VSS	C13
VSS	C16
VSS	C17
VSS	C21
VSS	C23
VSS	C25
VSS	C27
VSS	C29
VSS	C31
VSS	C33
VSS	C37
VSS	D8
VSS	D13
VSS	D15
VSS	D17
VSS	D21
VSS	D23
VSS	D34
VSS	E1
VSS	E3
VSS	E13
VSS	E17
VSS	E21

Table 9-1. Intel® 82845GL/82845GV Ballout by Signal Name

Signal Name	Ball#
VSS	E35
VSS	E37
VSS	F6
VSS	F8
VSS	F14
VSS	F22
VSS	F24
VSS	F26
VSS	F28
VSS	F30
VSS	F32
VSS	G3
VSS	G9
VSS	G17
VSS	G21
VSS	G35
VSS	H6
VSS	H22
VSS	H32
VSS	J1
VSS	J3
VSS	J9
VSS	J17
VSS	J21
VSS	J23
VSS	J25
VSS	J27
VSS	J29
VSS	J35
VSS	J37
VSS	K24
VSS	K28
VSS	K32
VSS	L3
VSS	L29
VSS	L35
VSS	M6

Table 9-1. Intel® 82845GL/82845GV Ballout by Signal Name

Signal Name	Ball#
VSS	M10
VSS	M32
VSS	N1
VSS	N3
VSS	N9
VSS	N29
VSS	N35
VSS	N37
VSS	P28
VSS	P32
VSS	R3
VSS	R29
VSS	R35
VSS	T6
VSS	T10
VSS	T32
VSS	U1
VSS	U3
VSS	U9
VSS	U18
VSS	U20
VSS	U29
VSS	U35
VSS	U37
VSS	V17
VSS	V18
VSS	V20
VSS	V21
VSS	V28
VSS	V32
VSS	W3
VSS	W29
VSS	W34
VSS	W36
VSS	Y6
VSS	Y10
VSS	Y17

Table 9-1. Intel® 82845GL/82845GV Ballout by Signal Name

Signal Name	Ball#
VSS	Y18
VSS	Y20
VSS	Y21
VSS	Y32
VSS	AA1
VSS	AA9
VSS	AA18
VSS	AA20
VSS	AA29
VSS	AA35
VSS	AA37
VSS	AB4
VSS	AB6
VSS	AB28
VSS	AB32
VSS	AC3
VSS	AC29
VSS	AC35
VSS	AD32
VSS	AE1
VSS	AE9
VSS	AE29
VSS	AE35
VSS	AE37
VSS	AF6
VSS	AF8
VSS	AF28
VSS	AF32
VSS	AG3
VSS	AG4
VSS	AG5
VSS	AG29
VSS	AG35
VSS	AG37
VSS	AH16
VSS	AH20
VSS	AH24

Table 9-1. Intel® 82845GL/ 82845GV Ballout by Signal Name

Signal Name	Ball#
VSS	AH28
VSS	AH30
VSS	AH32
VSS	AH36
VSS	AJ13
VSS	AJ17
VSS	AJ21
VSS	AJ25
VSS	AJ29
VSS	AJ33
VSS	AJ37
VSS	AK12
VSS	AL27
VSS	AL31
VSS	AL35
VSS	AM3
VSS	AM4
VSS	AM6
VSS	AM8
VSS	AM10
VSS	AM12
VSS	AM16
VSS	AM20
VSS	AM24
VSS	AM28
VSS	AM32
VSS	AN1
VSS	AN3
VSS	AN5
VSS	AN7
VSS	AN33
VSS	AN35
VSS	AN37
VSS	AR1
VSS	AR3
VSS	AR5
VSS	AR7

Table 9-1. Intel® 82845GL/ 82845GV Ballout by Signal Name

Signal Name	Ball#
VSS	AR9
VSS	AR11
VSS	AR13
VSS	AR15
VSS	AR17
VSS	AR19
VSS	AR21
VSS	AR23
VSS	AR25
VSS	AR27
VSS	AR29
VSS	AR31
VSS	AR33
VSS	AR35
VSS	AR37
VSS	AT2
VSS	AT36
VSS	AU3
VSS	AU7
VSS	AU11
VSS	AU15
VSS	AU23
VSS	AU27
VSS	AU31
VSS	AU35
VSSA_DAC	B15
VSSA_DAC	C14
VSYNC	C6
VTT_DECAP	A31
VTT_DECAP	G37
VTT_DECAP	L37
VTT_DECAP	R37
VTT_DECAP	AC37
VTTFSB	B18
VTTFSB	B19
VTTFSB	B20
VTTFSB	C18

Table 9-1. Intel® 82845GL/ 82845GV Ballout by Signal Name

Signal Name	Ball#
VTTFSB	C19
VTTFSB	C20
VTTFSB	D18
VTTFSB	D19
VTTFSB	D20
VTTFSB	E19
VTTFSB	F18
VTTFSB	F20
VTTFSB	G19
VTTFSB	H18
VTTFSB	H20
VTTFSB	J19
VTTFSB	K18
VTTFSB	K20
VTTFSB	K22
VTTFSB	K26
VTTFSB	M28
VTTFSB	T28
VTTFSB	Y28
VTTFSB	AD28