F71882

Super Hardware Monitor + LPC I/O

Fintek Confidential
Do Not Copy!

Release Date: May, 2008
Version: V0.28P

F71882 Datasheet Revision History

Version	Date	Page	Revision History
0.20P	2005/10/14	-	Release Version
0.21P	2005/12/08	8	Added New SPI Function of Pin1
		13	Added New SPI Function Description of Power on Strapping Option (Pin1 & Pin5)
		50	Added F1 Register Description of SPI Device Config. Registers.
		53	Modified ROM Address Select Register Index 27h Bit5 Description.
		103	Added Output Voltage Control Register 3 Index 09h Description.
		105	Added SPI Timeout Register Index F1h
		106	Added SPI Status Register Index F3h Bit 6-5 Description.
		107	Added SPI Memory Mapping Register Index F7h Description.
0.21P	2005/12/14	-	Updated the schematics
0.22P	2005/12/19	10	Added description of Pin 26
		11	Modified Pin 77 that GPIO23 be the default function
		12	Added SST/PECI Function on Pin 57/58
		47	Multi Function Select 4 Register Index 2Ch bit3 default is 1
		56	Multi Function Select 4 Register Index 2Ch bit3 default is 1
		111	ACPI Control Register Index F5h bit 5 be set 0
0.23P	2006/1/19	-	Added ALERT# function on Pin 64
		-	Added FAN60_100 power on strap pin on Pin 121
		-	Added WDTRST# function on Pin56
		-	Updated register description
		-	Updated application circuits
0.24P	2006/11/23	59	Modified the description of Wakeup Control Register 2Dh bit 7(SPI_CS1_EN)
0.25P	2007/7/6	120	Company readdress
0.26P	2007/9/14	11	Modified power source of pin 84 (VSB → VBAT)
0.27P	2008/1/30	118	Modified operating temperature.
0.28P	2008/5/26	82	Modified chapter 8.6.2.35 title

Fintek Confidential
Do Not Copy!

Please note that all data and specifications are subject to change without notice. All the trade marks of products and companies mentioned in this data sheet belong to their respective owners.

LIFE SUPPORT APPLICATIONS

These products are not designed for use in life support appliances, devices, or systems where malfunction of these products can reasonably be expected to result in personal injury. Customers using or selling these products for use in such applications do so at their own risk and agree to fully indemnify Fintek for any damages resulting from such improper use or sales.

Table of Content

1. General Description 1
2. Feature List 1
3. Key Specification 4
4. Block Diagram 4
5. Pin Configuration 5
6. Pin Description 5
6.1 Power Pin 6
6.2 LPC Interface 6
6.3 FDC 6
6.4 UART and SIR 7
6.5 Parallel Port 9
6.6 Hardware Monitor 10
6.7 ACPI Function Pins 11
6.8 VID Controller 12
6.9 KBC Function 13
7. Function Description 14
7.1 Power on Strapping Option 14
7.2 FDC 14
7.3 UART 29
7.4 Parallel Port 32
7.5 Hardware Monitor 36
7.6 Keyboard Controller 45
7.7 SPI Interface 46
7.8 ACPI Function 47
7.9 AMDSI and Intel SST PECI Function 49
8. Register Description 51
8.1 Global Control Registers 55
8.2 FDC Registers (CR00) 60
8.3 UART1 Registers (CR01) 63
8.4 UART 2 Registers (CR02) 64
8.5 Parallel Port Registers (CR03) 66
8.6 Hardware Monitor Registers (CR04) 68
8.6.2.1 HW Monitor Config. Register — Index 01h 69

Fintek Confidential
Do Not Copy!

8.6.2.2 BEEP OVT ALERTConfig. Register — Index 02h....69
8.6.2.3 Case Open Config. Register — Index 03h....69
8.6.2.4 PECI AMDSI Select Register — Index 0Ah....70
8.6.2.5 PECI CPU Select Register — Index 0Bh (MEAS_TYPE == 2'b01)....70
8.6.2.6 AMDSI Version Register — Index 0Bh (MEAS_TYPE ==2'b10)....70
8.6.2.7 TCC Temp. Register — Index 0Ch (MEAS_TYPE == 2'b01)....70
8.6.2.8 AMDSI Node ID Register — Index 0Ch (MEAS_TYPE ==2'b10)....70
8.6.2.9 SST Address Register — Index 0Dh....70
8.6.2.10 VID Divide Register — Index 0Eh....71
8.6.2.11 Configuration Register — Index 0Fh....71
8.6.2.12 Voltage1 PME# Enable Register — Index 10h....72
8.6.2.13 Voltage1 Interrupt Status Register — Index 11h....72
8.6.2.14 Voltage1 Exceeds Real Time Status Register 1 — Index 12h....72
8.6.2.15 Voltage1 BEEP Enable Register — Index 13h....72
8.6.2.16 Voltage reading and limit— Index 20h- 4Fh....72
8.6.2.17 Temperature PME# Enable Register — Index 60h....73
8.6.2.18 Temperature Interrupt Status Register — Index 61h....73
8.6.2.19 Temperature Real Time Status Register — Index 62h....74
8.6.2.20 Temperature BEEP Enable Register — Index 63h....75
8.6.2.21 OVT Output Enable Register 1 — Index 66h....75
8.6.2.22 Temperature Sensor Type Register — Index 6Bh....75
8.6.2.23 TEMP1 Limit Hystersis Select Register -- Index 6Ch....76
8.6.2.24 TEMP2 and TEMP3 Limit Hystersis Select Register -- Index 6Dh....76
8.6.2.25 DIODE OPEN Status Register -- Index 6Fh....76
8.6.2.26 Temperature Filter Select Register -- Index 8Eh....77
8.6.2.27 FAN PME# Enable Register — Index 90h....78
8.6.2.28 FAN Interrupt Status Register — Index 91h....78
8.6.2.29 FAN Real Time Status Register — Index 92h....79
8.6.2.30 FAN BEEP# Enable Register — Index 93h....79
8.6.2.31 Fan Type Select Register -- Index 94h....79
8.6.2.32 Fan mode Select Register -- Index 96h....80
8.6.2.33 Auto Fan1 and Fan2 Boundary Hystersis Select Register -- Index 98h....81
8.6.2.34 Auto Fan3 and Fan4 Boundary Hystersis Select Register -- Index 99h....82
8.6.2.35 Auto Fan Duty Update Rate Select Register -- Index 9Bh....82
8.6.2.36 FAN1 and FAN2 START UP DUTY-CYCLE/VOLTAGE — Index 9Ch....82
8.6.2.37 FAN3 and FAN4 START UP DUTY-CYCLE/VOLTAGE — Index 9Dh....83
8.6.2.38 Fan Fault Time Register -- Index 9Fh....83

Fintek Confidential
Do Not Copy!

8.6.2.39 VT1 BOUNDARY 1 TEMPERATURE – Index A6h....84
8.6.2.40 VT1 BOUNDARY 2 TEMPERATURE – Index A7....84
8.6.2.41 VT1 BOUNDARY 3 TEMPERATURE – Index A8h....85
8.6.2.42 VT1 BOUNDARY 4 TEMPERATURE – Index A9....85
8.6.2.43 FAN1 SEGMENT 1 SPEED COUNT – Index AAh....85
8.6.2.44 FAN1 SEGMENT 2 SPEED COUNT – Index ABh....86
8.6.2.45 FAN1 SEGMENT 3 SPEED COUNT – Index ACh....86
8.6.2.46 FAN1 SEGMENT 4 SPEED COUNT – Index ADh....86
8.6.2.47 FAN1 SEGMENT 5 SPEED COUNT – Index AEh....86
8.6.2.48 FAN1 Temperature Mapping Select – Index AFh....86
8.6.2.49 VT2 BOUNDARY 1 TEMPERATURE – Index B6h....88
8.6.2.50 VT2 BOUNDARY 2 TEMPERATURE – Index B7....88
8.6.2.51 VT2 BOUNDARY 3 TEMPERATURE – Index B8h....88
8.6.2.52 VT2 BOUNDARY 4 TEMPERATURE – Index B9....88
8.6.2.53 FAN2 SEGMENT 1 SPEED COUNT – Index BAh....89
8.6.2.54 FAN2 SEGMENT 2 SPEED COUNT – Index BBh....89
8.6.2.55 FAN2 SEGMENT 3 SPEED COUNT – Index BCh....89
8.6.2.56 FAN2 SEGMENT 4 SPEED COUNT – Index BDh....89
8.6.2.57 FAN2 SEGMENT 5 SPEED COUNT – Index BEh....90
8.6.2.58 FAN2 Temperature Mapping Select – Index BFh....90
8.6.2.59 VT3 BOUNDARY 1 TEMPERATURE – Index C6h....91
8.6.2.60 VT3 BOUNDARY 2 TEMPERATURE – Index C7....91
8.6.2.61 VT3 BOUNDARY 3 TEMPERATURE – Index C8h....92
8.6.2.62 VT3 BOUNDARY 4 TEMPERATURE – Index C9....92
8.6.2.63 FAN3 SEGMENT 1 SPEED COUNT – Index CAh....92
8.6.2.64 FAN3 SEGMENT 2 SPEED COUNT – Index CBh....93
8.6.2.65 FAN3 SEGMENT 3 SPEED COUNT – Index CCh....93
8.6.2.66 FAN3 SEGMENT 4 SPEED COUNT – Index CDh....93
8.6.2.67 FAN3 SEGMENT 5 SPEED COUNT – Index CEh....93
8.6.2.68 FAN3 Temperature Mapping Select – Index CFh....93
8.6.2.69 VT4 BOUNDARY 1 TEMPERATURE – Index D6h....95
8.6.2.70 VT4 BOUNDARY 2 TEMPERATURE – Index D7....95
8.6.2.71 VT4 BOUNDARY 3 TEMPERATURE – Index D8h....95
8.6.2.72 VT4 BOUNDARY 4 TEMPERATURE – Index D9....95
8.6.2.73 FAN4 SEGMENT 1 SPEED COUNT – Index DAh....96
8.6.2.74 FAN4 SEGMENT 2 SPEED COUNT – Index DBh....96
8.6.2.75 FAN4 SEGMENT 3 SPEED COUNT – Index DCh....96

Fintek Confidential
Do Not Copy

8.6.2.76 FAN4 SEGMENT 4 SPEED COUNT – Index DDh 96
8.6.2.77 FAN4 SEGMENT 5 SPEED COUNT – Index DEh....97
8.6.2.78 FAN4 Temperature Mapping Select – Index DFh 97
8.7 KBC Registers (CR05) 98
8.8 GPIO Registers (CR06) 100
8.9 VID Registers (CR07)....107
8.10 SPI Registers (CR08)....111
8.11 PME and ACPI Registers (CR0A)....115
9. Electron Characteristic....118
9.1 Absolute Maximum Ratings 118
9.2 DC Characteristics 118
9.3 DC Characteristics Continued....118
10. Ordering Information....119
11. Package Dimensions 120
12. Application Circuit....121

Fintek Confidential
Do Not Copy!

1. General Description

The F71882 is the featured IO chip for PC system. Equipped with one IEEE 1284 parallel port, two UART ports, KBC, Serial Peripheral Interface (SPI), SIR and one FDC. The F71882 integrated with hardware monitor, 9 sets of voltage sensor, 4 sets of creative auto-controlling fans and 4 temperature sensor pins for the accurate dual current type temp. measurement for CPU thermal diode or external transistors 2N3906.

The F71882 provides flexible features for multi-directional application. For instance, supports 6/12 pins CPU VID controlling for VRM9.0/10.0/11* and CPU VID OTF (On The Fly), provides 32 GPIO pins (multi-pin), IRQ sharing function also designed in UART feature for particular usage and accurate current mode H/W monitor will be worth in measurement of temperature, provides 3 modes fan speed control mechanism included Manual Mode/Speed Mode/Temperature Mode for users' selection Additionally, provides easy voltage sensor input (VSI) function for sensing Vcore voltage, then output (VSO) the offset voltage for over/under voltage change use.

Further, the F71882 supports an automatic/dynamic over-voltage function for application of over-clocking or under-clocking. This function provides a pin by external trigger signal to improve the CPU's performance by voltage offset automatically when system is going to run over-clocking or under-clocking. Due to achieve this action, suggest F75133S Loading Gauge chip can be the part which detects system/CPU loading to decide when issues the over-clocking/under-clocking signal for system executing. Briefly, user can gain more features on motherboard by these two parts which improve performance and efficiency.

The F71882 also integrated SPI interface. The SPI interface is for BIOS usage including bridge function and back up function. Others, the F71882 supports newest AMDSI and Intel PECI/SST interfaces for temperature use. These features as above description will help you more and improve product value. Finally, the F71882 is powered by 3.3V voltage, with the LPC interface in the package of 128-PQFP.

Fintek Confidential
Do Not Copy!

2. Feature List

- **General Functions**
  - Comply with LPC Spec. 1.0
  - Support DPM (Device Power Management), ACPI
  - 6/12 VID pins for VRM9.0/10.0/11.0* and CPU VID OTF (On The Fly)
  - Easy voltage sensor I/O (VSI/VSO) for Vcore change use.
  - Support automatic and dynamic voltage change function
    (2 Turbo pins Turbo1# and Turbo2# for VID usage)
  - Provides one FDC, two UARTs, KBC and Parallel Port

- H/W monitor functions
- SPI interface for BIOS usage
- Support AMD SID/SIC interface and Intel SST/PECI interface
- 32 GPIO Pins for flexible application
- 24/48 MHz clock input
- Packaged in 128-PQFP and powered by 3.3VCC

FDC

- Compatible with IBM PC AT disk drive systems
- Variable write pre-compensation with track selectable capability
- Support vertical recording format
- DMA enable logic
- 16-byte data FIFOs
- Support floppy disk drives and tape drives
- Detects all overrun and under run conditions
- Built-in address mark detection circuit to simplify the read electronics
- Completely compatible with industry standard 82077
- 360K/720K/1.2M/1.44M/2.88M format; 250K, 300K, 500K, 1M, 2M bps data transfer rate

UART

- Two high-speed 16C550 compatible UART with 16-byte FIFOs
- Fully programmable serial-interface characteristics
- Baud rate up to 115.2K
- Support IRQ sharing

Infrared

- Support IrDA version 1.0 SIR protocol with maximum baud rate up to 115.2K bps

Parallel Port

- One PS/2 compatible bi-directional parallel port
- Support Enhanced Parallel Port (EPP) – Compatible with IEEE 1284 specification
- Support Extended Capabilities Port (ECP) – Compatible with IEEE 1284 specification
- Enhanced printer port back-drive current protection

Keyboard Controller

- 8042 based with optional F/W from AMIKKEYTM-2, with 2K bytes of programmable ROM, and 256 bytes of RAM
- Asynchronous Access to Two Data Registers and One status Register

Fintek Confidential
Do Not Copy!

- Software compatibility with the 8042
- Support PS/2 mouse
- Support both interrupt and polling modes
- Fast Gate A20 and Hardware Keyboard Reset
- 6 MHz, 8 MHz, 12 MHz, or 16 MHz operating frequency

Hardware Monitor Functions

- 3 dual current type (±3℃) thermal inputs for CPU thermal diode and 2N3906 transistors
- Temperature range -20℃~145℃ (One is from -20~127℃, others are from 0~ 145℃)
- 9 sets voltage monitoring (6 external and 3 internal powers)
- High limit signal (SMI#) for Vcore level
- 4 fan speed monitoring inputs
- 4 fan speed PWM/DC control outputs(support 3 wire and 4 wire fans)
- Issue PME# and OVT# hardware signals output
- Case intrusion detection circuit
- WATCHDOG# comparison of all monitored values
- Support AMDSI interface

Serial Peripheral Interface Compatible

- Support SPI bridge function for BIOS use
- Support Back Up BIOS function

Integrate AMD SI Interface

Integrate Intel PECI/SST Interface

Package

- 128-pin PQFP Green Package

Noted: Patented TW207103 TW207104 TW220442 US6788131 B1 TWI235231 TW237183 TWI263778 CN ZL 2004 1 0043269.4

Fintek Confidential Do Not Copy!

3. Key Specification

- Supply Voltage 3.0V to 3.6V
- Operating Supply Current ----- mA typ.

4. Block Diagram

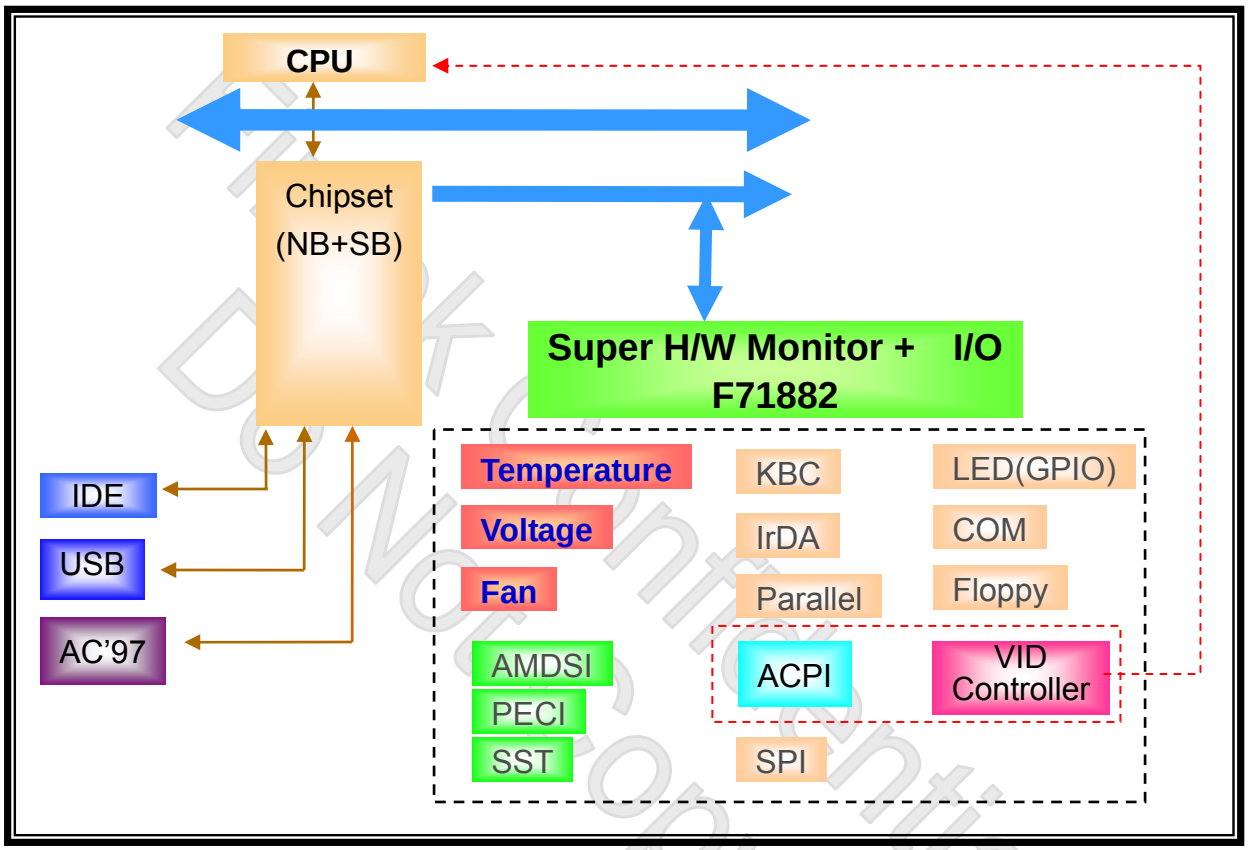

Fintek Confidential
Do Not Copy!

5. Pin Configuration

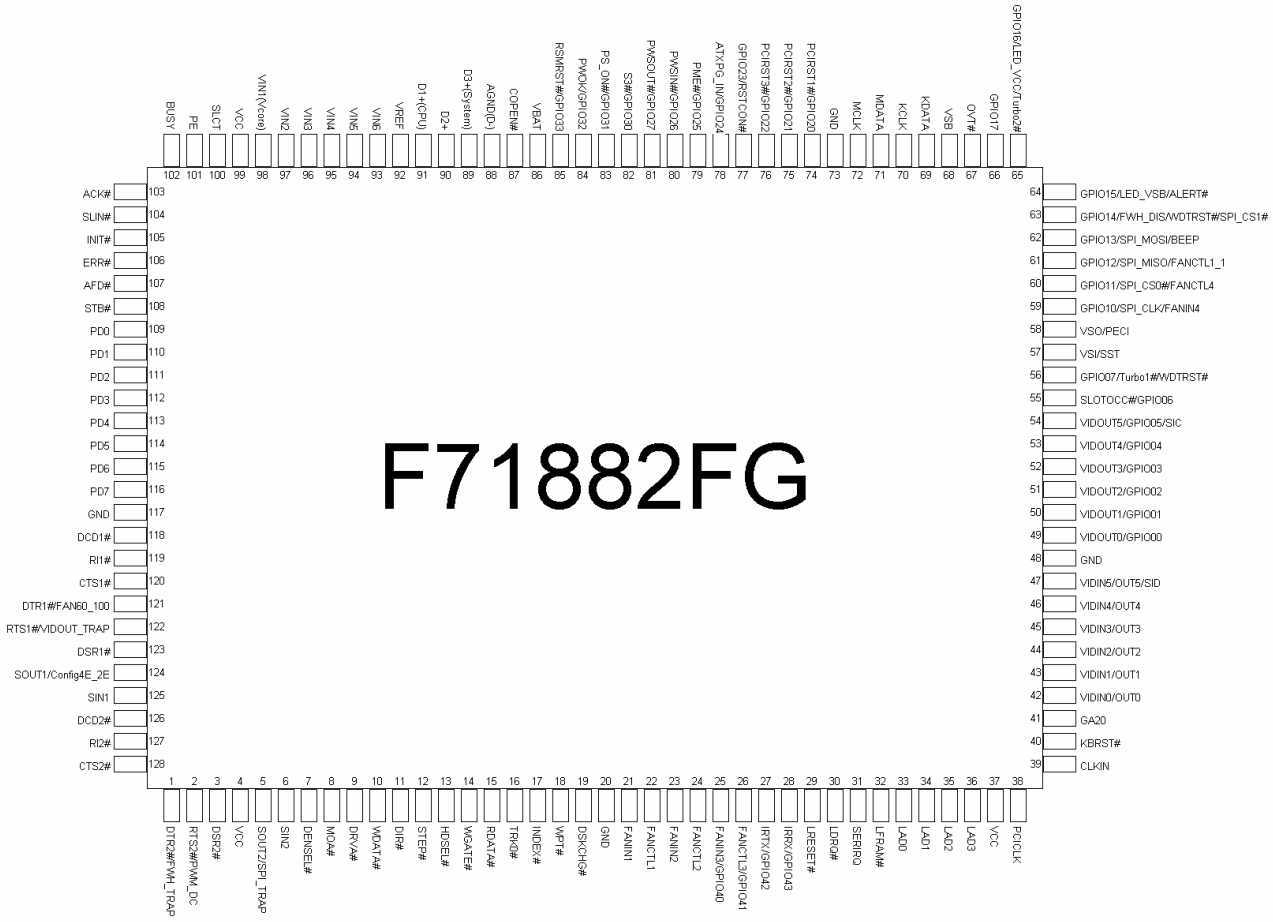

6. Pin Description

I/O_{12t} - TTL level bi-directional pin with 12 mA source-sink cap ability.

I/OOD_{12t} - TTL level bi-directional pin, can select to OD or OUT by register, with 12 mA source-sink capability.

I/OD_{16t5v} - TTL level bi-directional pin,Open-drain output with 16 mA source-sink capability, 5V tolerance.

$OD_{16\text{-}u10\text{-}5v}$ - Open-drain output pin with 16 mA sink capability, pull-up 10k ohms, 5V tolerance.

I/OD_{12ts5v} - TTL level bi-directional pin and schmitt trigger, Open-drain output with 12 mA sink capability, 5V tolerance.

$I_{Lv}/O_{D8\text{-}S1}$ - Low level bi-directional pin (VIH → 0.9V, VIL → 0.6V.). Output with 8mA drive and 1mA sink capability.

I_{Lv}/OD_{12} - Low level bi-directional pin (VIH → 0.9V, VIL → 0.6V.). Output with 12mA sink

capability.

$O_{8\text{-}u47\text{-}5v}$ - Open-drain pin with 8 mA source-sink capability, pull-up 47k ohms, 5V tolerance.
O_8 - Output pin with 8 mA source-sink capability.
O_{12} - Output pin with 12 mA source-sink capability.
O_{30} - Output pin with 30 mA source-sink capability.
AOUT - Output pin(Analog).
OD_{12} - Open-drain output pin with 12 mA sink capability.
$OD_{12\text{-}5v}$ - Open-drain output pin with 12 mA sink capability, 5V tolerance.
OD_{24} - Open-drain output pin with 24 mA sink capability.
IN_{t5v} - TTL level input pin,5V tolerance.
IN_{ts} - TTL level input pin and schmitt trigger.
IN_{ts5v} - TTL level input pin and schmitt trigger, 5V tolerance.
AIN - Input pin(Analog).
P - Power.

6.1 Power Pin

Pin No.	Pin Name	Type	Description
4,37,99	VCC	P	Power supply voltage input with 3.3V
68	VSB	P	Stand-by power supply voltage input 3.3V
86	VBAT	P	Battery voltage input
88	AGND(D-)	P	Analog GND
20, 48, 73, 117	GND	P	Digital GND

6.2 LPC Interface

Pin No.	Pin Name	Type	PWR	Description
29	LRESET#	IN_{ts5v}	VCC	Reset signal. It can connect to PCIRST# signal on the host.
30	LDRQ#	O_{12}	VCC	Encoded DMA Request signal.
31	SERIRQ	I/O_{12t}	VCC	Serial IRQ input/Output.
32	LFRAM#	IN_{ts}	VCC	Indicates start of a new cycle or termination of a broken cycle.
36-33	LAD[3:0]	I/O_{12t}	VCC	These signal lines communicate address, control, and data information over the LPC bus between a host and a peripheral.
38	PCICLK	IN_{ts}	VCC	33MHz PCI clock input.
39	CLKIN	IN_{ts}	VCC	System clock input. According to the input frequency 24/48MHz.

6.3 FDC

Pin No.	Pin Name	Type	PWR	Description
7	DENSEL#	OD_{24}	VCC	Drive Density Select. Set to 1 - High data rate.(500Kbps, 1Mbps) Set to 0 – Low data rate. (250Kbps, 300Kbps)
8	MOA#	OD_{24}	VCC	Motor A On. When set to 0, this pin enables disk drive 0. This is an open drain output.

Fintek Confidential Do Not Copy

9	DRVA#	OD_{24}	VCC	Drive Select A. When set to 0, this pin enables disk drive A. This is an open drain output.
10	WDATA#	OD_{24}	VCC	Write data. This logic low open drain writes pre-compensation serial data to the selected FDD. An open drain output.
11	DIR#	OD_{24}	VCC	Direction of the head step motor. An open drain output. Logic 1 = outward motion Logic 0 = inward motion
12	STEP#	OD_{24}	VCC	Step output pulses. This active low open drain output produces a pulse to move the head to another track.
13	HDSEL#	OD_{24}	VCC	Head select. This open drain output determines which disk drive head is active. Logic 1 = side 0 Logic 0 = side 1
14	WGATE#	OD_{24}	VCC	Write enable. An open drain output.
15	RDATA#	IN_{ts5v}	VCC	The read data input signal from the FDD.
16	TRK0#	IN_{ts5v}	VCC	Track 0. This Schmitt-triggered input from the disk drive is active low when the head is positioned over the outermost track.
17	INDEX#	IN_{ts5v}	VCC	This Schmitt-triggered input from the disk drive is active low when the head is positioned over the beginning of a track marked by an index hole.
18	WPT#	IN_{ts5v}	VCC	Write protected. This active low Schmitt input from the disk drive indicates that the diskette is write-protected.
19	DSKCHG#	IN_{ts5v}	VCC	Diskette change. This signal is active low at power on and whenever the diskette is removed.

6.4 UART and SIR

Pin No.	Pin Name	Type	PWR	Description
27	IRTX	O_{12}	VCC	Infrared Transmitter Output.
	GPIO42	I/OOD_{12t}		General Purpose IO
28	IRRX	IN_{ts}	VSB	Infrared Receiver input.
	GPIO43	I/OOD_{12t}		General Purpose IO.
118	DCD1#	IN_{t5v}	VCC	Data Carrier Detect. An active low signal indicates the modem or data set has detected a data carrier.
119	RI1#	IN_{t5v}	VCC	Ring Indicator. An active low signal indicates that a ring signal is being received from the modem or data set.
120	CTS1#	IN_{t5v}	VCC	Clear To Send is the modem control input.
121	DTR1#	$O_{8\text{-}u47,5v}$	VCC	UART 1 Data Terminal Ready. An active low signal informs the modem or data set that controller is ready to communicate. Internal 47k ohms pulled high and disable after power on strapping.
	FAN60_100	IN_{t5v}		Power on strapping pin: 1(Default): (Internal pull high) Power on fan speed default duty is 60%.(PWM) 0: (External pull down)

Fintek Confidential Do Not Copy

				Power on fan speed default duty is 100%.(PWM)
122	RTS1#	$O_{8\text{-}u47,5v}$	VCC	UART 1 Request To Send. An active low signal informs the modem or data set that the controller is ready to send data. Internal 47k ohms pulled high and disable after power on strapping.
	VIDOUT_TRAP	IN_{t5v}		Power on strapping pin: 1(Default) : 1. VIDIN[5-0]/OUT[5-0] pins will be VIDIN function. 2. VIDOUT[5-0]/GPIO0[5-0] pins will be VIDOUT function 0 : 1. VIDIN[5-0]/OUT[5-0] pins will be VIDIN[5-0]/OUT[5-0] function.(In-Out on the same pins) 2. VIDOUT[5-0]/GPIO0[5-0] pins will be GPIO0 function.
123	DSR1#	IN_{t5v}	VCC	Data Set Ready. An active low signal indicates the modem or data set is ready to establish a communication link and transfer data to the UART.
124	SOUT1	$O_{8\text{-}u47,5v}$	VCC	UART 1 Serial Output. Used to transmit serial data out to the communication link. Internal 47k ohms pulled high and disable after power on strapping.
	Config4E_2E	IN_{t5v}		Power on strapping: 1(Default)Configuration register:4E 0 Configuration register:2E
125	SIN1	IN_{t5v}	VCC	Serial Input. Used to receive serial data through the communication link.
126	DCD2#	IN_{t5v}	VCC	Data Carrier Detect. An active low signal indicates the modem or data set has detected a data carrier.
127	RI2#	IN_{t5v}	VCC	Ring Indicator. An active low signal indicates that a ring signal is being received from the modem or data set.
128	CTS2#	IN_{t5v}	VCC	Clear To Send is the modem control input.
1	DTR2#	$O_{8\text{-}u47,5v}$	VCC	UART 2 Data Terminal Ready. An active low signal informs the modem or data set that controller is ready to communicate. Internal 47k ohms pulled high and disable after power on strapping.
	FWH_TRAP	IN_{t5v}		Power on strapping : 1(Default): SPI as a backup BIOS 0 : SPI as a primary BIOS
2	RTS2#	$O_{8\text{-}u47,5v}$	VCC	UART 2 Request To Send. An active low signal informs the modem or data set that the controller is ready to send data. Internal 47k ohms pulled high and disable after power on strapping.
	HPWM_DC	IN_{t5v}		Power on strapping : 1 (Default): Fan control method will be PWM Mode 0 Drive :Fan control method will be Linear Mode
3	DSR2#	IN_{t5v}	VCC	Data Set Ready. An active low signal indicates the modem or data set is ready to establish a communication link and transfer data to the UART.

Fintek Confidential Do Not Copy

5	SOUT2	$O_{8\text{-}u47,5v}$	VCC	UART 2 Serial Output. Used to transmit serial data out to the communication link. Internal 47k ohms pulled high and disable after power on strapping.
	SPI_TRAP	IN_{t5v}		Power on strapping: 1(Default) : SPI function disable 0 : SPI function enable
6	SIN2	IN_{t5v}	VCC	Serial Input. Used to receive serial data through the communication link.
66	GPIO17	I/OOD_{12t}	VSB	General Purpose IO

6.5 Parallel Port

Pin No.	Pin Name	Type	PWR	Description
100	SLCT	IN_{ts5v}	VCC	An active high input on this pin indicates that the printer is selected. Refer to the description of the parallel port for definition of this pin in ECP and EPP mode.
101	PE	IN_{ts5v}	VCC	An active high input on this pin indicates that the printer has detected the end of the paper. Refer to the description of the parallel port for the definition of this pin in ECP and EPP mode.
102	BUSY	IN_{ts5v}	VCC	An active high input indicates that the printer is not ready to receive data. Refer to the description of the parallel port for definition of this pin in ECP and EPP mode.
103	ACK#	IN_{ts5v}	VCC	An active low input on this pin indicates that the printer has received data and is ready to accept more data. Refer to the description of the parallel port for the definition of this pin in ECP and EPP mode.
104	SLIN#	$OD_{12\text{-}5v}$	VCC	Output line for detection of printer selection. Refer to the description of the parallel port for the definition of this pin in ECP and EPP mode.
105	INIT#	$OD_{12\text{-}5v}$	VCC	Output line for the printer initialization. Refer to the description of the parallel port for the definition of this pin in ECP and EPP mode.
106	ERR#	IN_{ts5v}	VCC	An active low input on this pin indicates that the printer has encountered an error condition. Refer to the description of the parallel port for the definition of this pin in ECP and EPP mode.
107	AFD#	$OD_{12\text{-}5v}$	VCC	An active low output from this pin causes the printer to auto feed a line after a line is printed. Refer to the description of the parallel port for the definition of this pin in ECP and EPP mode.
108	STB#	$OD_{12\text{-}5v}$	VCC	An active low output is used to latch the parallel data into the printer. Refer to the description of the parallel port for the definition of this pin in ECP and EPP mode.

Fintek Confidential
Do Not Copy

109	PD0	I/O_{12ts5v}	VCC	Parallel port data bus bit 0. Refer to the description of the parallel port for the definition of this pin in ECP and EPP mode.
110	PD1	I/O_{12ts5v}	VCC	Parallel port data bus bit 1.
111	PD2	I/O_{12ts5v}	VCC	Parallel port data bus bit 2.
112	PD3	I/O_{12ts5v}	VCC	Parallel port data bus bit 3.
113	PD4	I/O_{12ts5v}	VCC	Parallel port data bus bit 4.
114	PD5	I/O_{12ts5v}	VCC	Parallel port data bus bit 5.
115	PD6	I/O_{12ts5v}	VCC	Parallel port data bus bit 6.
116	PD7	I/O_{12ts5v}	VCC	Parallel port data bus bit 7.

6.6 Hardware Monitor

Pin No.	Pin Name	Type	PWR	Description
93-97	VIN6~VIN2	AIN	VCC	Voltage Input 2 ~ 6.
98	Vcore(VIN1)	AIN	VCC	Voltage Input for Vcore.
21	FANIN1	IN_{ts5v}	VCC	Fan 1 tachometer input.
22	FAN_CTL1	OD_{12-5v} AOUT	VCC	Fan 1 control output. This pin provides PWM duty-cycle output or a voltage output.
23	FANIN2	IN_{ts5v}	VCC	Fan 2 tachometer input.
24	FAN_CTL2	OD_{12-5v} AOUT	VCC	Fan 2 control output. This pin provides PWM duty-cycle output or a voltage output.
25	FANIN3	IN_{ts5v}	VCC	Fan 3 speed input.
	GPIO40	I/OOD_{12t}		General purpose IO.
26	FAN_CTL3*	OD_{12-5V} AOUT	VCC	Fan 3 control output. This pin provides PWM duty-cycle output or a voltage output. *This pin default function is FANCTL (PWM signal output), please take care the application if user want to implement GPIO function.
	GPIO41	I/OOD_{12t}		General purpose IO.
89	D3+(System)	AIN	VCC	Thermal diode/transistor temperature sensor input for system use.
90	D2+	AIN	VCC	Thermal diode/transistor temperature sensor input.
91	D1+(CPU)	AIN	VCC	CPU thermal diode/transistor temperature sensor input. This pin is for CPU use.
92	VREF	AOUT	VCC	Voltage sensor output.
79	PME#	OD_{12-5v}	VSB	Generated PME event. It supports the PCI PME# interface. This signal allows the peripheral to request the system to wake up from the S3 state.
	GPIO25	I/OOD_{12t}		General Purpose IO.
59	GPIO10	I/OOD_{12t}	VSB	General purpose IO.
	SPI_SLK	O_{12}		Serial clock output pin for SPI device.
	FANIN4	IN_{ts5v}		Fan 4 tachometer input
60	GPIO11	I/OOD_{12t}	VSB	General purpose IO.
	SPI_CS0#	O_{12}		Function A: When using firmware hub BIOS for primary BIOS and SPI BIOS for second BIOS, please

Fintek Confidential Do Not Copy

				connect this pin to SPI BIOS chip select pin. Function B: When using two SPI Flashes for primary and back up BIOS, please connect this pin to primary BIOS chip select pin.
	FANCTL4	$OD_{12\text{-}5v}$ AOUT		Fan 4 control output. This pin provides PWM duty-cycle output or a voltage output.
61	GPIO12	I/OOD_{12t}	VSB	General purpose IO.
	SPI_MISO	IN_{t5v}		SPI master in/slave out pin.
	FANCTL1_1	$OD_{12\text{-}5v}$		Fan 1 control output. This pin provides PWM duty-cycle open drain output for Intel 4-pin Fan.
62	GPIO13	I/OOD_{12t}	VSB	General purpose IO.
	SPI_MOSI	O_{12}		SPI master out/slave in pin.
	BEEP	OD_{24}		Beep pin.
63	GPIO14	I/OOD_{12t}	VSB	General purpose IO.
	FWH_DIS	O_{12}		Firmware hub disable
	WDTRST#	$OD_{12\text{-}5v}$		Watch dog timer signal output.
	SPI_CS1#	O_{12}		When using two SPI Flashes for primary and back up BIOS, please connect this pin to back up BIOS chip select pin.
67	OVT#	$OD_{12\text{-}5v}$	VSB	Over temperature signal output.

6.7 ACPI Function Pins

Pin No.	Pin Name	Type	PWR	Description
64	GPIO15	I/OOD_{12t}	VSB	General purpose IO.
	LED_VSB	OD_{12}		Power LED for VSB.
	ALERT#	OD_{12}		Alert a signal when temperature over limit setting.
65	GPIO16	I/OOD_{12t}	VSB	General purpose IO.
	LED_VCC	OD_{12}		Power LED for VCC.
	Turbo2#	IN_{ts5v}		VID Turbo 2 enable control pin. (Patent Issue)
74	PCIRST1#	OD_{12}	VSB	It is a output buffer of RSTCON# and LRESET#.
	GPIO20	I/OOD_{12}		General purpose IO.
75	PCIRST2#	O_{12}	VSB	It is a output buffer of RSTCON# and LRESET#.
	GPIO21	I/OOD_{12}		General purpose IO.
76	PCIRST3#	O_{12}	VSB	It is a output buffer of RSTCON# and LRESET#.
	GPIO22	I/OOD_{12}		General purpose IO.
77	GPIO23	I/OOD_{12}	VSB	General purpose IO. (Default)
	RSTCON#	OD_{12}		RESET Connect# with 50ms debouce function, it connects to reset button, and also other reset source on the motherboard.
78	ATXPG_IN	AIN	VSB	ATX Power Good input.
	GPIO24	I/OOD_{12t}		General purpose IO.
84	PWROK	OD_{12}	VBAT	PWROK function, It is power good signal of VCC, which is delayed 400ms (default) as VCC arrives at

Fintek Confidential Do Not Copy

				2.8V.
	GPIO32	I/OOD$_{12t}$		General purpose IO.
80	PWSIN#	IN$_{ts5v}$	VSB	Main power switch button input.
	GPIO26	I/OOD$_{12t}$		General purpose IO.
81	PWSOUT#	OD$_{12}$	VSB	Panel Switch Output. This pin is low active and pulse output. It is power on request output#.
	GPIO27	I/OOD$_{12t}$		General purpose IO.
82	S3#	IN$_{ts5v}$	VSB	S3# Input is Main power on-off switch input.
	GPIO30	I/OOD$_{12t}$		General purpose IO.
83	PSON#	OD$_{12\text{-}5v}$	VSB	Power supply on-off control output. Connect to ATX power supply PS_ON# signal.
	GPIO31	I/OOD$_{12t}$		General purpose IO.
85	RSMRST#	OD$_{12}$	VBAT	Resume Reset# function, It is power good signal of VSB, which is delayed 66ms as VSB arrives at 2.3V.
	GPIO33	I/OOD$_{12t}$		General purpose IO.
87	COPEN#	IN$_{ts5v}$	VBAT	Case Open Detection #. This pin is connected to a specially designed low power CMOS flip-flop backed by the battery for case open state preservation during power loss.

6.8 VID Controller

Pin No.	Pin Name	Type	PWR	Description
46-42	VIDIN[4:0]	IN$_{ts5v}$	VCC	CPU VID input pins. Special level input VIH→ 0.9, VIL → 0.6
	OUT[4:0]	O$_{12}$		CPU VID output pins. (These is for VID in-out function at the same pin) (Power On Trapping by pin 122)
47	VIDIN5	IN$_{ts5v}$	VCC	CPU VID input pins. Special level input VIH→ 0.9, VIL → 0.6
	OUT5	O$_{12}$		CPU VID output pins. (These is for VID in-out function at the same pin) (Power On Trapping by pin 122)
	SID	I$_{Lv}$/OD$_{12}$		AMDSI interface data input.
53-49	VIDOUT[4:0]	OD$_{12}$	VSB	CPU VID output pins.
	GPIO[4:0]	I/OOD$_{12t}$		General purpose pin. (Power On Trapping by pin 122)
54	VIDOUT5	OD$_{12}$	VSB	CPU VID output pins.
	GPIO5	I/OOD$_{12t}$		General purpose pin. (Power On Trapping by pin 122)
	SIC	OD$_{12}$		AMDSI interface clock output.
55	SLOTOCC#	IN$_{ts5v}$	VSB	CPU SLOTOCC# input.
	GPIO06	I/OOD$_{12t}$		General purpose pin.
56	GPIO07	I/OOD$_{12t}$	VSB	General purpose pin.
	Turbo1#	IN$_{ts5v}$		VID Turbo 1 enable control pin. (Patent Issue)
	WDTRST#	OD$_{12\text{-}5v}$		Watch dog timer signal output.
57	VSI	AIN	VSB	Easy voltage sensor input for Vcore change use.
	SST	I$_{Lv}$/O$_{D8\text{-}S1}$		Intel SST hardware monitor interface.
58	VSO	AOUT	VSB	Easy voltage sensor output for Vcore change use.

Fintek Confidential
Do Not Copy

	PECI	I_{Lv}/O_{D8-S1}		Intel PECI hardware monitor interface.

6.9 KBC Function

Pin No.	Pin Name	Type	PWR	Description
40	KBRST#	$OD_{16-u10,5V}$	VCC	Keyboard reset. This pin is high after system reset. Internal pull high 3.3V with 10k ohms. (KBC P20)
41	GA20	$OD_{16-u10,5V}$	VCC	Gate A20 output. This pin is high after system reset. Internal pull high 3.3V with 10k ohms. (KBC P21)
69	KDATA	$I/OD_{16t,5V}$	VSB	Keyboard Data.
70	KCLK	$I/OD_{16t,5V}$	VSB	Keyboard Clock.
71	MDAT	$I/OD_{16t,5V}$	VSB	PS2 Mouse Data.
72	MCLK	$I/OD_{16t,5V}$	VSB	PS2 Mouse Clock.

Fintek Confidential
Do Not Copy!

7. Function Description

7.1 Power on Strapping Option

The F71882 provides four pins for power on hardware strapping to select functions. There is a form to describe how to set the functions you want.

Pin No.	Symbol	Value	Description
1	FWH_TRAP	1	SPI as a backup BIOS (Default)
		0	SPI as a primary BIOS
2	HPWM_DC	1	Fan control mode: PWM mode. (Default)
		0	Fan control mode: Linear mode.
5	SPI_TRAP	1	SPI function disable (Default)
		0	SPI function enable
121	FAN60_100	1	Power on Fan speed default duty is 60%(PWM)(Default)
		0	Power on Fan speed default duty is 100%(PWM)
122	VIDOUT	1	6 pins VIDIN and 6 pins VIDOUT (Default)
		0	VIDIN/OUT on 6 pins , Original VIDOUT pins will be GPIO pins.
124	Config4E_2E	1	Configuration Register I/O port is 4E/4F. (Default)
		0	Configuration Register I/O port is 2E/2F.

Fintek Confidential
Do Not Copy

7.2 FDC

The Floppy Disk Controller provides the interface between a host processor and one floppy disk drives. It integrates a controller and a digital data separator with write pre-compensation, data rate selection logic, microprocessor interface, and a set of registers. The FDC supports data transfer rates of 250 Kbps, 300 Kbps, 500 Kbps, and 1 Mbps. It operates in PC/AT mode and supports 3-mode type drives.

The FDC configuration is handled by software and a set of Configuration registers. Status, Data, and Control registers facilitate the interface between the host microprocessor and the disk drive, providing information about the condition and/or state of the FDC. These configuration registers can select the data rate, enable interrupts, drives, and DMA modes, and indicate errors in the data or operation of the FDC/FDD. The controller manages data transfers using a set of data transfer and control commands. These commands are handled in three phases: Command, Execution, and Result. Not all commands utilize all these three phases.

The below content is about the FDC device register descriptions. All the registers are for software porting reference.

Status Register A (PS/2 mode) — Base + 0

Bit	Name	R/W	Default	Description
7	INTPEND	R	0	This bit indicates the state of the interrupt output.
6	DRV2_N	R	-	0: a second drive has been installed. 1: a second drive has not been installed.
5	STEP	R	0	This bit indicates the complement of STEP# disk interface output.
4	TRK0_N	R	-	This bit indicates the state of TRK0# disk interface input.
3	HDSEL	R	0	This bit indicates the complement of HDSEL# disk interface output. 0: side 0. 1: side 1.
2	INDEX_N	R	-	This bit indicates the state of INDEX# disk interface input.
1	WPT_N	R	-	This bit indicates the state of WPT# disk interface input. 0: disk is write-protected. 1: disk is not write-protected.
0	DIR	R	0	This bit indicates the complement of DIR# disk interface output.

Status Register A (Model 30 mode) — Base + 0

Bit	Name	R/W	Default	Description
7	INTPEND	R	0	This bit indicates the state of the interrupt output.
6	DRQ	R	0	This bit indicates the state of the DRQ signal.
5	STEP_FF	R	0	This bit indicates the complement of latched STEP# disk interface output.
4	TRK0	R	-	This bit indicates the complement of TRK0# disk interface input.
3	HDSEL_N	R	1	This bit indicates the state of HDSEL# disk interface output. 0: side 0. 1: side 1.
2	INDEX	R	-	This bit indicates the complement of INDEX# disk interface input.
1	WPT	R	-	This bit indicates the complement of WPT# disk interface input. 0: disk is write-protected. 1: disk is not write-protected.
0	DIR_N	R	1	This bit indicates the state of DIR# disk interface output. 0: head moves in inward direction. 1: head moves in outward direction.

Status Register B (PS/2 Mode) — Base + 1

Bit	Name	R/W	Default	Description
7-6	Reserved	R	11	Reserved. Return 11b when read.
5	DR0	R	0	Drive select 0. This bit reflects the bit 0 of Digital Output Register.
4	WDATA	R	0	This bit changes state at every rising edge of WDATA#.
3	RDATA	R	0	This bit changes state at every rising edge of RDATA#.
2	WGATE	R	0	This bit indicates the complement of WGATE# disk interface output.
1	MOTEN1	R	0	This bit indicates the complement of MOB# disk interface output. Not support in this design.

Fintek Confidential
Do Not Copy!

0	MOTEN0	R	0	This bit indicates the complement of MOA# disk interface output.

Status Register B (Model 30 Mode) — Base + 1

Bit	Name	R/W	Default	Description
7	DRV2_N	R	-	0: a second drive has been installed. 1: a second drive has not been installed.
6	DSB_N	R	1	This bit indicates the state of DRVB# disk interface output. Not support in this design.
5	DSA_N	R	1	This bit indicates the state of DRVA# disk interface output.
4	WDATA_FF	R	0	This bit is latched at the rising edge of WDATA# and is cleared by a read from the Digital Input Register.
3	RDATA_FF	R	0	This bit is latched at the rising edge of RDATA# and is cleared by a read form the Digital Input Register.
2	WGATE_FF	R	0	This bit is latched at the falling edge of WGATE# and is cleared by a read from the Digital Input Register.
1	DSD_N	R	1	This bit indicates the complement of DRVD# disk interface output. Not support in this design.
0	DSC_N	R	1	This bit indicates the complement of DRVC# disk interface output. Not support in this design.

Digital Output Register — Base + 2

Bit	Name	R/W	Default	Description
7	MOTEN3	R	0	Motor enable 3. Not support in this design.
6	MOTEN2	R	0	Motor enable 2. Not support in this design.
5	MOTEN1	R/W	0	Motor enable 1. Used to control MOB#. MOB# is not support in this design.
4	MOTEN0	R/W	0	Motor enable 0. Used to control MOA#.
3	DAMEN	R/W	0	DMA enable. This bit has two mode of operation. PC-AT and Model 30 mode: write 1 will enable DMA and IRQ, write 0 will disable DMA and IRQ. PS/2 mode: This bit is reserved. DMA and IRQ are always enabled in PS/2 mode.
2	RESET	R	0	Write 0 to this bit will reset the controller. I will remain in reset condition until a 1 is written.
1	DSD_N	R	1	This bit indicates the complement of DRVD# disk interface output. Not support in this design.
0	DSC_N	R	1	This bit indicates the complement of DRVC# disk interface output. Not support in this design.

Tape Drive Register — Base + 3

Bit	Name	R/W	Default	Description
7-6	Reserved	R	00	Reserved. Return 00b when read.
5-4	TYPEID	R	11	Reserved in normal function, return 11b when read. If 3 mode FDD function is enabled. These bits indicate the drive type ID.

Fintek Confidential Do Not Copy!

3-2	Reserved	R	11	Reserved. Return 11b when read in normal function. Return 00b when read in 3 mode FDD function.
1-0	TAPESEL	R/W	0	These bits assign a logical drive number to be a tape drive.

Main Status Register — Base + 4

Bit	Name	R/W	Default	Description
7	RQM	R	0	Request for Master indicates that the controller is ready to send or receive data from the uP through the FIFO.
6	DIO	R	0	Data I/O (direction): 0: the controller is expecting a byte to be written to the Data Register. 1: the controller is expecting a byte to be read from the Data Register.
5	NON_DMA	R	0	Non DMA Mode: 0: the controller is in DAM mode. 1: the controller is interrupt or software polling mode.
4	FDC_BUSY	R	0	This bit indicate that a read or write command is in process.
3	DRV3_BUSY	R	0	FDD number 3 is in seek or calibration condition. FDD number 3 is not support in this design.
2	DRV2_BUSY	R	0	FDD number 2 is in seek or calibration condition. FDD number 2 is not support in this design.
1	DRV1_BUSY	R	0	FDD number 1 is in seek or calibration condition. FDD number 1 is not support in this design.
0	DRV0_BUSY	R	0	FDD number 0 is in seek or calibration condition.

Data Rate Select Register — Base + 4

Bit	Name	R/W	Default	Description
7	SOFTRST	W	0	A 1 written to this bit will software reset the controller. Auto clear after reset.
6	PWRDOWN	W	0	A 1 to this bit will put the controller into low power mode which will turn off the oscillator and data separator circuits.
5	Reserved	-	-	Return 0 when read.
4-2	PRECOMP	W	000	Select the value of write precompensation: 250K-1Mbps 2Mbps 000: default delays default delays 001: 41.67ns 20.8ns 010: 83.34ns 41.17ns 011: 125.00ns 62.5ns 100: 166.67ns 83.3ns 101: 208.33ns 104.2ns 110: 250.00ns 125.00ns 111: 0.00ns (disabled) 0.00ns (disabled) The default value of corresponding data rate: 250Kbps: 125ns 300Kbps: 125ns 500Kbps: 125ns 1Mbps: 41.67ns 2Mbps: 20.8ns

Fintek Confidential Do Not Copy!

1-0	DRATE	W	10	Data rate select: MFM FM 00: 500Kbps 250Kbps 01: 300Kbps 150Kbps 10: 250Kbps 125Kbps 11: 1Mbps illegal

Data (FIFO) Register — Base + 5

Bit	Name	R/W	Default	Description
7-0	DATA	R/W	00h	The FIFO is used to transfer all commands, data and status between controller and the system. The Data Register consists of four status registers in a stack with only one register presented to the data bus at a time. The FIFO is default disabled and could be enabled via the CONFIGURE command.

Status Registers 0

Bit	Name	R/W	Default	Description
7-6	IC	R	-	Interrupt code : 00: Normal termination of command. 01: Abnormal termination of command. 10: Invalid command. 11: Abnormal termination caused by poling.
5	SE	R	-	Seek end. Set when a SEEK or RECALIBRATE or a READ or WRITE with implied seek command is completed.
4	EC	R	-	Equipment check. 0: No error 1: When a fault signal is received form the FDD or the TRK0# signal fails to occur after 77 step pulses.
3	NR	R	-	Not ready. 0: Drive is ready 1: Drive is not ready.
2	HD	R	-	Head address. The current head address.
1-0	DS	R	-	Drive select. 00: Drive A selected. 01: Drive B selected. 10: Drive C selected. 11: Drive D selected.

Status Registers 1

Bit	Name	R/W	Default	Description
7	EN	R	-	End of Track. Set when the FDC tries to access a sector beyond the final sector of a cylinder.
6	DE	R	-	Data Error. The FDC detect a CRC error in either the ID field or the data field of a sector.

Fintek Confidential
Do Not Copy!

4	OR	R	-	Overrun/Underrun. Set when the FDC is not serviced by the host system within a certain time interval during data transfer.
3	Reserved	-	-	Unused. This bit is always “0”
2	ND	R	-	No Data. Set when the following conditions occurred: 1. The specified sector is not found during any read command. 2. The ID field cannot be read without errors during a READ ID command. 3. The proper sector sequence cannot be found during a READ TRACK command.
1	NW	R	-	No Writable Set when WPT# is active during execution of write commands.
0	MA	R	-	Missing Address Mark. Set when the following conditions occurred: 1. Cannot detect an ID address mark at the specified track after encountering the index pulse form the INDEX# pin twice. 2. Cannot detect a data address mark or a deleted data address mark on the specified track.

Status Registers 2

Bit	Name	R/W	Default	Description
7	Reserved	-	-	Unused. This bit is always “0”.
6	CM	R	-	Control Mark. Set when following conditions occurred: 1. Encounters a deleted data address mark during a READ DATA command. 2. Encounters a data address mark during a READ DELETED DATA command.
5	DD	R	-	Data Error in Data Field. The FDC detects a CRC error in the data field.
4	WC	R	-	Wrong Cylinder. Set when the track address from the sector ID field is different from the track address maintained inside the FDC.
3	SE	R	-	Scan Equal. Set if the equal condition is satisfied during execution of the SCAN command.
2	SN	R	-	Scan Not Satisfied. Set when the FDC cannot find a sector on the track which meets the desired condition during any scan command.
1	BC	R	-	Bad Cylinder. The track address from the sector ID field is different from the track address maintained inside the FDC and is equal to FFh which indicates a bad track.
0	MD	R	-	Missing Data Address Mark. Set when the FDC cannot detect a data address mark or a deleted data address mark.

Fintek Confidential
Do Not Copy

Status Registers 3

Bit	Name	R/W	Default	Description
7	Reserved	-	-	Unused. This bit is always “0”.
6	WP	R	-	Write Protect. Indicates the status of WPT# pin.
5	Reserved	R	-	Unused. This bit is always “1”.
4	T0	R	-	Track 0. Indicates the status of the TRK0# pin.
3	Reserved.	R	-	Unused. This bit is always “1”.
2	HD	R	-	Head Address. Indicates the status of the HDSEL# pin.
1	DS1	R	-	Drive Select. These two bits indicate the DS1, DS0 bits in the command phase.
0	DS0	R	-	

Digital Input Register (PC-AT Mode) — Base + 7

Bit	Name	R/W	Default	Description
7	DSKCHG	R	-	This bit indicates the complement of DSKCHG# disk interface input.
6-0	Reserved	R	-	Reserved.

Digital Input Register (PS/2 Mode) — Base + 7

Bit	Name	R/W	Default	Description
7	DSKCHG	R	-	This bit indicates the complement of DSKCHG# disk interface input.
6-3	Reserved	-	-	Reserved.
2-1	DRATE	R	10	These bits indicate the status of the DRATE programmed through the Data Rate Select Register or Configuration Control Register.
0	HIGHDEN_N	R	1	0: 1Mbps or 500Kbps data rate is chosen. 1: 300Kbps or 250Kbps data rate is chosen.

Digital Input Register (Model 30 Mode) — Base + 7

Bit	Name	R/W	Default	Description
7	DSKCHG_N	R	-	This bit indicates the state of DSKCHG# disk interface input.
6-4	Reserved	-	-	Reserved.
3	DMAEN	R	0	This bit reflects the DMA bit in Digital Output Register.
2	NOPRE	R	0	This bit reflects the NOPRE bit in Configuration Control Register.
1-0	DRATE	R	10	These bits indicate the status of DRATE programmed through the Data Rate Select Register or Configuration Control Register.

Fintek Confidential
Do Not Copy!

Configuration Control Register (PC-AT and PS/2 Mode) — Base + 7

Bit	Name	R/W	Default	Description
7-2	Reserved	-	-	Reserved.
1-0	DRATE	W	10	These bit determine the data rate of the floppy controller. See DRATE bits in Data Rate Select Register.

Configuration Control Register (Model 30 Mode) — Base + 7

Bit	Name	R/W	Default	Description
7-3	Reserved	-	-	Reserved.
2	NOPRE	W	0	This bit could be programmed through Configuration Control Register and be read through the bit 2 in Digital Input Register in Model 30 Mode. But it has no functionality.
1-0	DRATE	W	10	These bit determine the data rate of the floppy controller. See DRATE bits in Data Rate Select Register.

FDC Commands

Terminology:

C Cylinder Number 0 -256
D Data Pattern
DIR Step Direction
0: step out
1: step in
DS0 Drive Select 0
DS1 Drive Select 1
DTL Data Length
EC Enable Count
EOT End of Track
EFIFO Enable FIFO
0: FIFO is enabled.
1: FIFO is disabled.
EIS Enable Implied Seek
FIFOTHR FIFO Threshold
GAP Alters Gap Length
GPL Gap Length
H/HDS Head Address
HLT Head Load Time
HUT Head Unload Time
LOCK Lock EFIFO, FIFOTHR, PTRTRK bits.
Prevent these bits from being affected by software reset.
MFM MFM or FM mode
0: FM
1: MFM
MT Multi-Track
N Sector Size Code. All values up to 07h are allowable.
00: 128 bytes
01: 256 bytes
.. ..
07 16 Kbytes

Fintek Confidential
Do Not Copy!

NCN	New Cylinder Number
ND	Non-DMA Mode
OW	Overwritten
PCN	Present Cylinder Number
POLL	Polling disable 0: polling is enabled. 1: polling is disabled.
PRETRK	Precompensation Start Track Number
R	Sector address
RCN	Relative Cylinder Number
SC	Sector per Cylinder
SK	Skip deleted data address mark
SRT	Step Rate Time
ST0	Status Register 0
ST1	Status Register 1
ST2	Status Register 2
ST3	Status Register 3
WGATE	Write Gate alters timing of WE.

Read Data

Phase	R/W	D7	D6	D5	D4	D3	D2	D1	D0	Remark
Command	W	MT	MFM	SK	0	0	1	1	0	Command code
	W	0	0	0	0	0	HDS	DS1	DS0	
	W	---------- C ----------								Sector ID information prior to command execution
	W	---------- H ----------								
	W	---------- R ----------								
	W	---------- N ----------								
	W	---------- EOT ----------								
	W	---------- GPL ----------								
	W	---------- DTL ----------								
Execution										Data transfer between the FDD and system
Result	R	---------- ST0 ----------								Status information after command execution.
	R	---------- ST1 ----------								
	R	---------- ST2 ----------								
	R	---------- C ----------								Sector ID information after command execution.
	R	---------- H ----------								
	R	---------- R ----------								
	R	---------- N ----------								

Read Deleted Data

Phase	R/W	D7	D6	D5	D4	D3	D2	D1	D0	Remark
Command	W	MT	MFM	SK	0	1	1	0	0	Command code

Fintek Confidential
Do Not Copy!

	W	0	0	0	0	0	HDS	DS1	DS0	
	W	---------- C ----------								Sector ID information prior to command execution
	W	---------- H ----------								
	W	---------- R ----------								
	W	---------- N ----------								
	W	---------- EOT ----------								
	W	---------- GPL ----------								
	W	---------- DTL ----------								
Execution										Data transfer between the FDD and system
Result	R	---------- ST0 ----------								Status information after command execution.
	R	---------- ST1 ----------								
	R	---------- ST2 ----------								
	R	---------- C ----------								Sector ID information after command execution.
	R	---------- H ----------								
	R	---------- R ----------								
	R	---------- N ----------								

Read A Track

Phase	R/W	D7	D6	D5	D4	D3	D2	D1	D0	Remark
Command	W	0	MFM	0	0	0	0	1	0	Command code
	W	0	0	0	0	0	HDS	DS1	DS0	
	W	---------- C ----------								Sector ID information prior to command execution
	W	---------- H ----------								
	W	---------- R ----------								
	W	---------- N ----------								
	W	---------- EOT ----------								
	W	---------- GPL ----------								
	W	---------- DTL ----------								
Execution										Data transfer between the FDD and system. FDD reads contents of all cylinders from index hole to EOT.
Result	R	---------- ST0 ----------								Status information after command execution.
	R	---------- ST1 ----------								
	R	---------- ST2 ----------								
	R	---------- C ----------								Sector ID information after

Fintek Confidential Do Not Copy!

	R	---------- H ----------	command execution.
	R	---------- R ----------	
	R	---------- N ----------	

Read ID

Phase	R/W	D7	D6	D5	D4	D3	D2	D1	D0	Remark
Command	W	0	MFM	0	0	1	0	1	0	Command code
	W	0	0	0	0	0	HDS	DS1	DS0	
Execution										The first correct ID information on the cylinder is stored in Data Register.
Result	R	---------- ST0 ----------								Status information after command execution.
	R	---------- ST1 ----------								
	R	---------- ST2 ----------								
	R	---------- C ----------								Disk status after the command has been completed.
	R	---------- H ----------								
	R	---------- R ----------								
	R	---------- N ----------								

Verify

Phase	R/W	D7	D6	D5	D4	D3	D2	D1	D0	Remark
Command	W	MT	MFM	SK	1	0	1	1	0	Command code
	W	EC	0	0	0	0	HDS	DS1	DS0	
	W	---------- C ----------								Sector ID information prior to command execution
	W	---------- H ----------								
	W	---------- R ----------								
	W	---------- N ----------								
	W	---------- EOT ----------								
	W	---------- GPL ----------								
	W	---------- DTL/SC ----------								
Execution										No data transfer
Result	R	---------- ST0 ----------								Status information after command execution.
	R	---------- ST1 ----------								
	R	---------- ST2 ----------								
	R	---------- C ----------								Sector ID information after command
	R	---------- H ----------								

Fintek Confidential
Do Not Copy!

	R	---------- R ----------	execution.
	R	---------- N ----------	

Version

Phase	R/W	D7	D6	D5	D4	D3	D2	D1	D0	Remark
Command	W	0	0	0	1	0	0	0	0	Command code
Result	R	1	0	0	1	0	0	0	0	Enhanced controller

Write Data

Phase	R/W	D7	D6	D5	D4	D3	D2	D1	D0	Remark
Command	W	MT	MFM	0	0	0	1	0	1	Command code
	W	0	0	0	0	0	HDS	DS1	DS0	
	W	---------- C ----------								Sector ID information prior to command execution
	W	---------- H ----------								
	W	---------- R ----------								
	W	---------- N ----------								
	W	---------- EOT ----------								
	W	---------- GPL ----------								
	W	---------- DTL ----------								
Execution										Data transfer between the FDD and system.
Result	R	---------- ST0 ----------								Status information after command execution.
	R	---------- ST1 ----------								
	R	---------- ST2 ----------								
	R	---------- C ----------								Sector ID information after command execution.
	R	---------- H ----------								
	R	---------- R ----------								
	R	---------- N ----------								

Write Deleted Data

Phase	R/W	D7	D6	D5	D4	D3	D2	D1	D0	Remark
Command	W	MT	MFM	0	0	1	0	0	1	Command code
	W	0	0	0	0	0	HDS	DS1	DS0	
	W	---------- C ----------								Sector ID information prior to command
	W	---------- H ----------								

Fintek Confidential
Do Not Copy!

	W	---------- R ----------	execution
	W	---------- N ----------	
	W	---------- EOT ----------	
	W	---------- GPL ----------	
	W	---------- DTL ----------	
Execution			Data transfer between the FDD and system.
Result	R	---------- ST0 ----------	Status information after command execution.
	R	---------- ST1 ----------	
	R	---------- ST2 ----------	
	R	---------- C ----------	Sector ID information after command execution.
	R	---------- H ----------	
	R	---------- R ----------	
	R	---------- N ----------	

Format A Track

Phase	R/W	D7	D6	D5	D4	D3	D2	D1	D0	Remark
Command	W	0	MFM	0	0	1	1	0	1	Command code
	W	0	0	0	0	0	HDS	DS1	DS0	
	W	---------- N ----------								Bytes/Sector
	W	---------- SC ----------								Sectors/Cylinder
	W	---------- GPL ----------								Gap 3 Length
	W	---------- D ----------								Data Pattern
Execution for each sector (repeat)		---------- C ----------								Input sector parameter.
	W	---------- H ----------								
	W	---------- R ----------								
	W	---------- N ----------								
Result	R	---------- ST0 ----------								Status information after command execution.
	R	---------- ST1 ----------								
	R	---------- ST2 ----------								
	R	---------- Undefined ----------								
	R	---------- Undefined ----------								
	R	---------- Undefined ----------								
	R	---------- Undefined ----------								

Fintek Confidential
Do Not Copy!

Recalibrate

Phase	R/W	D7	D6	D5	D4	D3	D2	D1	D0	Remark
Command	W	0	0	0	0	0	1	1	1	Command code
	W	0	0	0	0	0	0	DS1	DS0	
Execution										Head retracted to track 0

Sense Interrupt Status

Phase	R/W	D7	D6	D5	D4	D3	D2	D1	D0	Remark
Command	W	0	0	0	0	1	0	0	0	Command code
Result	R	---------- ST0 ----------								
	R	---------- PCN ----------								

Specify

Phase	R/W	D7	D6	D5	D4	D3	D2	D1	D0	Remark
Command	W	0	0	0	0	0	0	1	1	Command code
	W	|---------- SRT ----------|				|---------- HUT ----------|			
	W	|---------- SRT ----------|							ND	

Seek

Phase	R/W	D7	D6	D5	D4	D3	D2	D1	D0	Remark
Command	W	0	0	0	0	1	1	1	1	Command code
	W	0	0	0	0	0	HDS	DS1	DS0	
	W	---------- NCN ----------								
Execution										Head positioned over proper cylinder on diskette

Configure

Phase	R/W	D7	D6	D5	D4	D3	D2	D1	D0	Remark
Command	W	0	0	0	1	0	0	1	1	Command code
	W	0	0	0	0	0	HDS	DS1	DS0	
	W	0	EIS	EFIFO	POLL	|---------- FIFOTHR ----------|				
	W	---------- PRETRK ----------								
Execution										Internal registers written

Relative Seek

Phase	R/W	D7	D6	D5	D4	D3	D2	D1	D0	Remark
Command	W	1	DIR	0	0	1	1	1	1	Command code

Fintek Confidential
Do Not Copy!

	W	0	0	0	0	0	HDS	DS1	DS0	
	W	---------- RCN ----------								

Perpendicular Mode

Phase	R/W	D7	D6	D5	D4	D3	D2	D1	D0	Remark
Command	W	0	0	0	1	0	0	1	0	Command code
	W	OW	0	D3	D2	D1	D0	GAP	WGATE	

Lock

Phase	R/W	D7	D6	D5	D4	D3	D2	D1	D0	Remark
Command	W	LOCK	0	0	1	0	1	0	0	Command code
Result	R	0	0	0	LOCK	0	0	0	0	

Dumpreg

Phase	R/W	D7	D6	D5	D4	D3	D2	D1	D0	Remark
Command	W	0	0	0	0	1	1	1	0	Command code
Result	R	---------- PCN (Drive 0) ----------								
	R	---------- PCN (Drive 0) ----------								
	R	---------- PCN (Drive 0) ----------								
	R	---------- PCN (Drive 0) ----------								
	R	|---------- SRT ----------|				|---------- HUT ----------|			
	R	|---------- SRT ----------|							ND	
	R	---------- SC/EOT ----------								
	R	LOCK	0	D3	D2	D1	D0	GAP	WGATE	
	R	0	EIS	EFIFO	POLL	|---------- FIFOTHR ----------|				
	R	---------- PRETRK ----------								

Sense Drive Status

Phase	R/W	D7	D6	D5	D4	D3	D2	D1	D0	Remark
Command	W	0	0	0	0	0	1	0	0	Command code
	W	0	0	0	0	0	HDS	DS1	DS0	
Result	R	---------- ST3 ----------								Status information abut disk drive

Invalid

Phase	R/W	D7	D6	D5	D4	D3	D2	D1	D0	Remark
Command	W	---------- Invalid Codes ----------								FDC goes to standby state.
Result	R	---------- ST0 ----------								ST0 = 80h

Fintek Confidential
Do Not Copy!

7.3 UART

The F71882 provides two UART ports and supports IRQ sharing for system application. The UARTs are used to convert data between parallel format and serial format. They convert parallel data into serial format on transmission and serial format into parallel data on receiver side. The serial format is formed by one start bit, followed by five to eight data bits, a parity bit if programmed and one (1.5 or 2) stop bits. The UARTs include complete modem control capability and an interrupt system that may be software trailed to the computing time required to handle the communication link. They have FIFO mode to reduce the number of interrupts presented to the host. Both receiver and transmitter have a 16-byte FIFO.

The below content is about the UART1 and UART2 device register descriptions. All the registers are for software porting reference.

Fintek Confidential Do Not Copy!

Receiver Buffer Register — Base + 0

Bit	Name	R/W	Default	Description
7-0	RBR	R	00h	The data received. Read only when LCR[7] is 0

Transmitter Holding Register — Base + 0

Bit	Name	R/W	Default	Description
7-0	THR	W	00h	Data to be transmitted. Write only when LCR[7] is 0

Divisor Latch (LSB) — Base + 0

Bit	Name	R/W	Default	Description
7-0	DLL	R/W	01h	Baud generator divisor low byte. Access only when LCR[7] is 1.

Divisor Latch (MSB) — Base + 1

Bit	Name	R/W	Default	Description
7-0	DLM	R/W	00h	Baud generator divisor high byte. Access only when LCR[7] is 1.

Interrupt Enable Register — Base + 1

Bit	Name	R/W	Default	Description
7-4	Reserved	-	-	Reserved.
3	EDSSI	R/W	0	Enable Modem Status Interrupt. Access only when LCR[7] is 0.
2	ELSI	R/W	0	Enable Line Status Error Interrupt. Access only when LCR[7] is 0.
1	ETBFI	R/W	0	Enable Transmitter Holding Register Empty Interrupt. Access only when LCR[7] is 0.
0	ERBFI	R/W	0	Enable Received Data Available Interrupt. Access only when LCR[7] is 0.

Interrupt Identification Register — Base + 2

Bit	Name	R/W	Default	Description
7	FIFO_EN	R	0	0: FIFO is disabled 1: FIFO is enabled.
6	FIFO_EN	R	0	0: FIFO is disabled 1: FIFO is enabled.
5-4	Reserved	-	-	Reserved.
3-1	IRQ_ID	R	000	000: Interrupt is caused by Modem Status 001: Interrupt is caused by Transmitter Holding Register Empty 010: Interrupt is caused by Received Data Available. 110: Interrupt is caused by Character Timeout 011: Interrupt is caused by Line Status.
0	IRQ_PENDN	R	1	1: Interrupt is not pending. 0: Interrupt is pending.

FIFO Control Register — Base + 2

Bit	Name	R/W	Default	Description
7-6	RCV_TRIG	W	00	00: Receiver FIFO trigger level is 1. 01: Receiver FIFO trigger level is 4. 10: Receiver FIFO trigger level is 8. 11: Receiver FIFO trigger level is 14.
5-3	Reserved	-	-	Reserved.
2	CLRTX	R	0	Reset the transmitter FIFO.
1	CLRRX	R	0	Reset the receiver FIFO.
0	FIFO_EN	R	0	0: Disable FIFO. 1: Enable FIFO.

Line Control Register — Base + 3

Bit	Name	R/W	Default	Description
7	DLAB	R/W	0	0: Divisor Latch can't be accessed. 1: Divisor Latch can be accessed via Base and Base+1.
6	SETBRK	R/W	0	0: Transmitter is in normal condition. 1: Transmit a break condition.
5	STKPAR	R/W	0	XX0: Parity Bit is disable 001: Parity Bit is odd. 011: Parity Bit is even 101: Parity Bit is logic 1 111: Parity Bit is logic 0
4	EPS	R/W	0	
3	PEN	R/W	0	
2	STB	R/W	0	0: Stop bit is one bit 1: When word length is 5 bit stop bit is 1.5 bit else stop bit is 2 bit
1-0	WLS	R/W	00	00: Word length is 5 bit 01: Word length is 6 bit 10: Word length is 7 bit 11: Word length is 8 bit

Fintek Confidential
Do Not Copy!

MODEM Control Register — Base + 4

Bit	Name	R/W	Default	Description
7-5	Reserved	-	-	Reserved.
4	LOOP	R/W	0	0: UART in normal condition. 1: UART is internal loop back
3	OUT2	R/W	0	0: All interrupt is disabled. 1: Interrupt is enabled (disabled) by IER.
2	OUT1	R/W	0	Read from MSR[6] is loop back mode
1	RTS	R/W	0	0: RTS# is forced to logic 1 1: RTS# is forced to logic 0
0	DTR	R/W	0	0: DTR# is forced to logic 1 1: DTR# is forced to logic 0

Line Status Register — Base + 5

Bit	Name	R/W	Default	Description
7	RCR_ERR	R	0	0: No error in the FIFO when FIFO is enabled 1: Error in the FIFO when FIFO is enabled.
6	TEMT	R	1	0: Transmitter is in transmitting. 1: Transmitter is empty.
5	THRE	R	1	0: Transmitter Holding Register is not empty. 1: Transmitter Holding Register is empty.
4	BI	R	0	0: No break condition detected. 1: A break condition is detected.
3	FE	R	0	0: Data received has no frame error. 1: Data received has frame error.
2	PE	R	0	0: Data received has no parity error. 1: Data received has parity error.
1	OE	R	0	0: No overrun condition occurred. 1: An overrun condition occurred.
0	DR	R	0	0: No data is ready for read. 1: Data is received.

MODEM Status Register — Base + 6

Bit	Name	R/W	Default	Description
7	DCD	R	-	Complement of DCD# input. In loop back mode, this bit is equivalent to OUT2 in MCR.
6	RI	R	-	Complement of RI# input. In loop back mode , this bit is equivalent to OUT1 in MCR
5	DSR	R	-	Complement of DSR# input. In loop back mode , this bit is equivalent to DTR in MCR
4	CTS	R	-	Complement of CTS# input. In loop back mode , this bit is equivalent to RTS in MCR
3	DDCD	R	0	0: No state changed at DCD#. 1: State changed at DCD#.
2	TERI	R	0	0: No Trailing edge at RI#. 1: A low to high transition at RI#.
1	DDSR	R	0	0: No state changed at DSR#. 1: State changed at DSR#.

Fintek Confidential
Do Not Copy

0	DCTS	R	0	0: No state changed at CTS#. 1: State changed at CTS#.

Scratch Register — Base + 7

Bit	Name	R/W	Default	Description
7-0	SCR	R/W	00h	Scratch register.

7.4 Parallel Port

The parallel port in F71882 supports an IBM XT/AT compatible parallel port (SPP), bi-directional paralle port (BPP), Enhanced Parallel Port (EPP), Extended Capabilities Parallel Port (ECP) mode. Refer to the configuration registers for more information on selecting the mode of operation.

The below content is about the Parallel Port device register descriptions. All the registers are for software porting reference.

Parallel Port Data Register — Base + 0

Bit	Name	R/W	Default	Description
7-0	DATA	R/W	00h	The output data to drive the parallel port data lines.

ECP Address FIFO Register — Base + 0

Bit	Name	R/W	Default	Description
7-0	ECP_AFIFO	R/W	00h	Access only in ECP Parallel Port Mode and the ECP_MODE programmed in the Extended Control Register is 011. The data written to this register is placed in the FIFO and tagged as an Address/RLE. It is auto transmitted by the hardware. The operation is only defined for forward direction. It divide into two parts : Bit 7 : 0: bits 6-0 are run length, indicating how many times the next byte to appear (0 = 1time, 1 = 2times, 2 = 3times and so on). 1: bits 6-0 are a ECP address. Bit 6-0 : Address or RLE depends on bit 7.

Device Status Register — Base + 1

Bit	Name	R/W	Default	Description
7	BUSY_N	R	-	Inverted version of parallel port signal BUSY.
6	ACK_N	R	-	Version of parallel port signal ACK#.
5	PERROR	R	-	Version of parallel port signal PE.

Fintek Confidential
Do Not Copy

4	SELECT	R	-	Version of parallel port signal SLCT.
3	ERR_N	R	-	Version of parallel port signal ERR#.
2-1	Reserved	R	11	Reserved. Return 11b when read.
0	TMOUT	R	-	This bit is valid only in EPP mode. Return 1 when in other modes. It indicates that a 10uS time out has occurred on the EPP bus. 0: no time out error. 1: time out error occurred, write 1 to clear.

Device Control Register — Base + 2

Bit	Name	R/W	Default	Description
7-6	Reserved	-	11	Reserved. Return 11b when read.
5	DIR	R/W	0	0: the parallel port is in output mode. 1: the parallel port is in input mode. It is auto reset to 0 when in SPP mode.
4	ACKIRQ_EN	R/W	0	Enable an interrupt at the rising edge of ACK#.
3	SLIN	R/W	0	Inverted and then drives the parallel port signal SLIN#. When read, the status of inverted SLIN# is return.
2	INIT_N	R/W	0	Drives the parallel port signal INIT#. When read, the status of INIT# is return.
1	AFD	R/W	0	Inverted and then drives the parallel port signal AFD#. When read, the status of inverted AFD# is return.
0	STB	R/W	0	Inverted and then drives the parallel port signal STB#. When read, the status of inverted STB# is return.

EPP Address Register — Base + 3

Bit	Name	R/W	Default	Description
7-0	EPP_ADDR	R/W	00h	Write this register will cause the hardware to auto transmit the written data to the device with the EPP Address Write protocol. Read this register will cause the hardware to auto receive data from the device by with the EPP Address Read protocol.

EPP Data Register — Base + 4 – Base + 7

Bit	Name	R/W	Default	Description
7-0	EPP_DATA	R/W	00h	Write this register will cause the hardware to auto transmit the written data to the device with the EPP Data Write protocol. Read this register will cause the hardware to auto receive data from the device by with the EPP Data Read protocol.

Parallel Port Data FIFO — Base + 400h

Bit	Name	R/W	Default	Description

Fintek Confidential
Do Not Copy!

7-0	C_FIFO	R/W	00h	Data written to this FIFO is auto transmitted by the hardware to the device by using standard parallel port protocol. It is only valid in ECP and the ECP_MODE is 010b.The operation is only for forward direction.

ECP Data FIFO — Base + 400h

Bit	Name	R/W	Default	Description
7-0	ECP_DFIFO	R/W	00h	Data written to this FIFO when DIR is 0 is auto transmitted by the hardware to the device by using ECP parallel port protocol. Data is auto read from device into the FIFO when DIR is 1 by the hardware by using ECP parallel port protocol. Read the FIFO will return the content to the system. It is only valid in ECP and the ECP_MODE is 011b.

ECP Test FIFO — Base + 400h

Bit	Name	R/W	Default	Description
7-0	T_FIFO	R/W	00h	Data may be read, written from system to the FIFO in any Direction. But no hardware handshake occurred on the parallel port lines. It could be used to test the empty, full and threshold of the FIFO. It is only valid in ECP and the ECP_MODE is 110b.

ECP Configuration Register A — Base + 400h

Bit	Name	R/W	Default	Description
7	IRQ_MODE	R	0	0: interrupt is ISA pulse. 1: interrupt is ISA level. Only valid in ECP and ECP_MODE is 111b.
6-4	IMPID	R	001	000: the design is 16-bit implementation. 001: the design is 8-bit implementation (default). 010: the design is 32-bit implementation. 011-111: Reserved. Only valid in ECP and ECP_MODE is 111b.
3	Reserved	-	-	Reserved.
2	BYTETRAN_N	R	1	0: when transmitting there is 1 byte waiting in the transceiver that does not affect the FIFO full condition. 1: when transmitting the state of the full bit includes the byte being transmitted. Only valid in ECP and ECP_MODE is 111b.
1-0	Reserved	R	00	Return 00 when read. Only valid in ECP and ECP_MODE is 111b.

ECP Configuration Register B — Base + 401h

Bit	Name	R/W	Default	Description

Fintek Confidential Do Not Copy

7	COMP	R	0	0: only send uncompressed data. 1: compress data before sending. Only valid in ECP and ECP_MODE is 111b.
6	Reserved	R	1	Reserved. Return 1 when read. Only valid in ECP and ECP_MODE is 111b.
5-3	ECP_IRQ_CH	R	001	000: the interrupt selected with jumper. 001: select IRQ 7 (default). 010: select IRQ 9. 011: select IRQ 10. 100: select IRQ 11. 101: select IRQ 14. 110: select IRQ 15. 111: select IRQ 5. Only valid in ECP and ECP_MODE is 111b.
2-0	ECP_DMA_CH	R	011	Return the DMA channel of ECP parallel port. Only valid in ECP and ECP_MODE is 111b.

Extended Control Register — Base + 402h

Bit	Name	R/W	Default	Description
7-5	ECP_MODE	R/W	000	000: SPP Mode. 001: PS/2 Parallel Port Mode. 010: Parallel Port Data FIFO Mode. 011: ECP Parallel Port Mode. 100: EPP Mode. 101: Reserved. 110: Test Mode. 111: Configuration Mode. Only valid in ECP.
4	ERRINTR_EN	R/W	0	0: disable the interrupt generated on the falling edge of ERR#. 1: enable the interrupt generated on the falling edge of ERR#.
3	DAMEN	R/W	0	0: disable DMA. 1: enable DMA. DMA starts when SERVICEINTR is 0.
2	SERVICEINTR	R/W	1	0: enable the following case of interrupt. DMAEN = 1: DMA mode. DMAEN = 0, DIR = 0: set to 1 whenever there are writeIntrThreshold or more bytes are free in the FIFO. DMAEN = 0, DIR = 0: set to 1 whenever there are readIntrThreshold or more bytes are valid to be read in the FIFO.
1	FIFOFULL	R	0	0: The FIFO has at least 1 free byte. 1: The FIFO is completely full.
0	FIFOEMPTY	R	0	0: The FIFO contains at least 1 byte. 1: The FIFO is completely empty.

Fintek Confidential
Do Not Copy

7.5 Hardware Monitor

For the 8-bit ADC has the 8mv LSB, the maximum input voltage of the analog pin is 2.048V. Therefore the voltage under 2.048V (ex:1.5V) can be directly connected to these analog inputs. The voltage higher than 2.048V should be reduced by a factor with external resistors so as to obtain the input range. Only 3Vcc is an exception for it is main power of the F71882. Therefore 3Vcc can directly connect to this chip's power pin and need no external resistors. There are two functions in this pin with 3.3V. The first function is to supply internal analog power of the F71882 and the second function is that voltage with 3.3V is connected to internal serial resistors to monitor the +3.3V voltage. The internal serial resistors are two 150K ohm, so that the internal reduced voltage is half of +3.3V.

There are four voltage inputs in the F71882 and the voltage divided formula is shown as follows:

$$VIN = V_{+12V} \times \frac{R_2}{R_1 + R_2}$$ where V_{+12V} is the analog input voltage, for example.

If we choose R1=27K, R2=5.1K, the exact input voltage for V+12v will be 1.907V, which is within the tolerance. As for application circuit, it can be refer to the figure shown as follows.

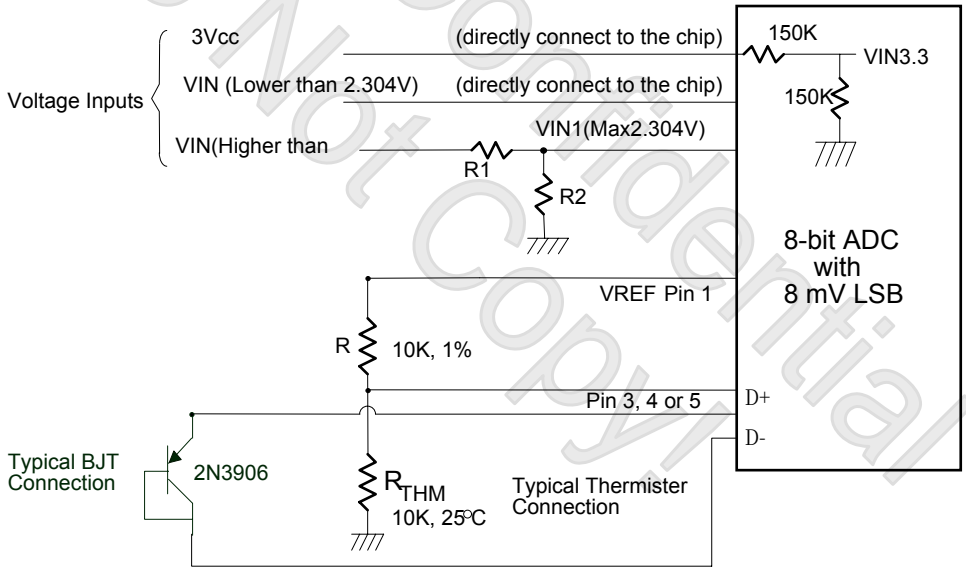

Fig 7-1

SMI# interrupt for voltage is shown as figure. Voltage exceeding or going below high limit will cause an interrupt if the previous interrupt has been reset by writing "1" all the interrupt Status Register. Voltage exceeding or going below low limit will result the same condition as voltage exceeding or going below high limit.

Fintek Confidential
Do Not Copy

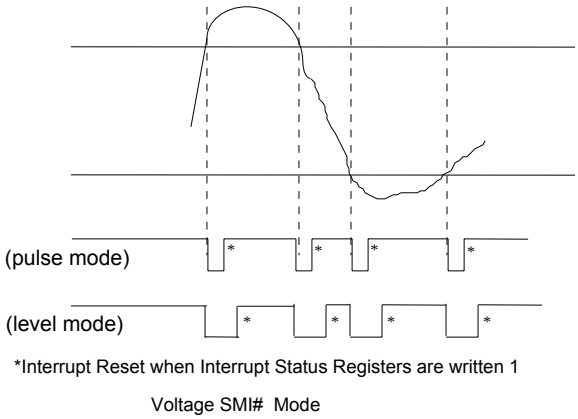

Fig 7-2

The F71882 monitors three remote temperature sensors. One of these sensors can be measured from -20°C to 127°C. The others can be measured from 0°C to 145°C (2 Sets) .More detail please refer register description.

Remote-sensor transistor manufacturers

Manufacturer	Model Number
Panasonic	2SB0709 2N3906
Philips	PMBT3906

Monitor Temperature from "thermistor"

The F71882 can connect three thermistor to measure environment temperature or remote temperature. The specification of thermistor should be considered to (1) β value is 3435K (2) resistor value is 10K ohm at 25°C. In the Figure 7-1, the thermistor is connected by a serial resistor with 10K ohm, then connected to VREF.

Monitor Temperature from "thermal diode"

Also, if the CPU, GPU or external circuits provide thermal diode for temperature measurement, the F71882 is capable to these situations. The build-in reference table is for PNP 2N3906 transistor. In the Figure 7-1, the transistor is directly connected into temperature pins.

ADC Noise Filtering

The ADC is integrating type with inherently good noise rejection. Micro-power operation places constraints on high-frequency noise rejection; therefore, careful PCB board layout and suitable external filtering are required for high-accuracy remote measurement in electronically noisy environment. High frequency EMI is best filtered at D+ and D- with an external 2200pF

Fintek Confidential Do Not Copy

capacitor. Too high capacitance may introduce errors due to the rise time of the switched current source. Nearly all noise sources tested cause the ADC measurement to be higher than the actual temperature, depending on the frequency and amplitude.

Over Temperature Signal (OVT#)

OVT# alert for temperature is shown as figure 7-3. When monitored temperature exceeds the over-temperature threshold value, OVT# will be asserted until the temperature goes below the hysteresis temperature.

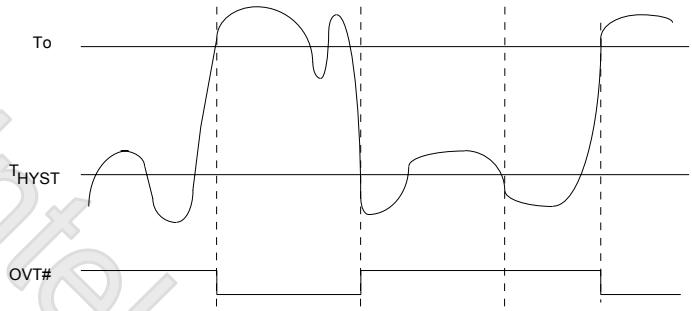

Fig 7-3

Temperature PME#

PME# interrupt for temperature is shown as figure 7-4. Temperature exceeding high limit or going below hysteresis will cause an interrupt if the previous interrupt has been reset by writing "1" all the interrupt Status Register.

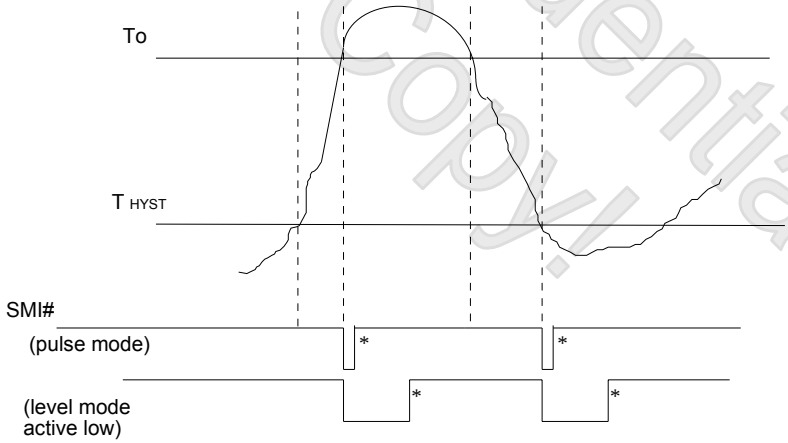

*Interrupt Reset when Interrupt Status Registers are written 1

Fig 7-4

Fan speed count

Fintek Confidential
Do Not Copy!

Inputs are provided by the signals from fans equipped with tachometer outputs. The level of these signals should be set to TTL level, and maximum input voltage cannot be over 5V. If the input signals from the tachometer outputs are over the 5V, the external trimming circuit should be added to reduce the voltage to obtain the input specification. The normal circuit and trimming circuits are shown as follows:

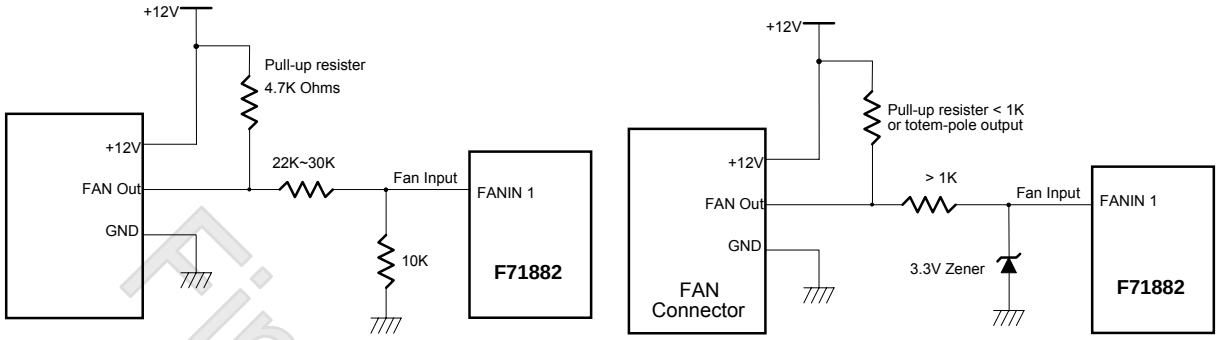

Fan with Tach Pull-Up to +12V, or Totern-Pole Output and Register Attenuator

Fan with Tach Pull-Up to +12V, or Totem-Pole Putput and Zener Clamp

Fig 7-5 / 7-6

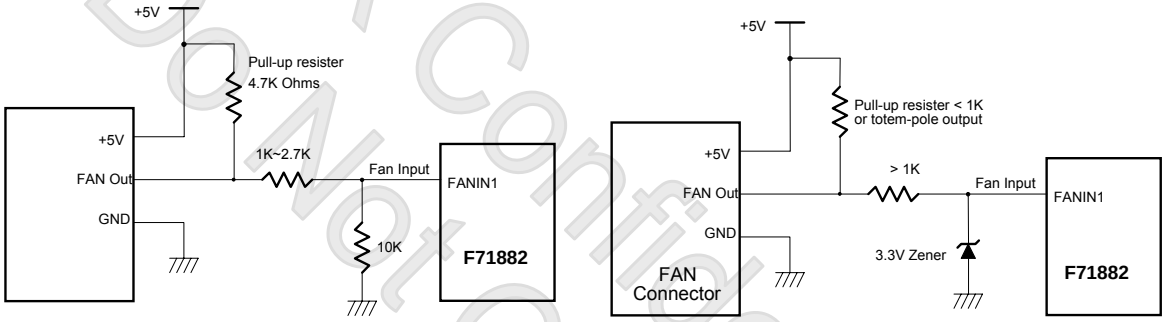

Fan with Tach Pull-Up to +5V, or Totern-Pole Output and Register Attenuator

Fan with Tach Pull-Up to +5V, or Totem-Pole Putput and Zener Clamp

Fig 7-7 / 7-8

Determine the fan counter according to:

$$Count = \frac{1.5 \times 10^6}{RPM}$$

In other words, the fan speed counter has been read from register, the fan speed can be evaluated by the following equation. As for fan, it would be best to use 2 pulses tachometer output per round.

$$RPM = \frac{1.5 \times 10^6}{Count}$$

Fintek Confidential
Do Not Copy!

Fan speed control

The F71882 provides 2 fan speed control methods:

1. LINEAR FAN CONTROL 2. PWM DUTY CYCLE

Linear Fan Control

The range of DC output is 0~3.3V, controlled by 8-bit register. 1 LSB is about 0.013V. The output DC voltage is amplified by external OP circuit, thus to reach maximum FAN OPERATION VOLTAGE, 12V. The output voltage will be given as followed:

$$\text{Output_voltage (V)} = 3.3 \times \frac{\text{Programmed 8bit Register Value}}{255}$$

And the suggested application circuit for linear fan control would be:

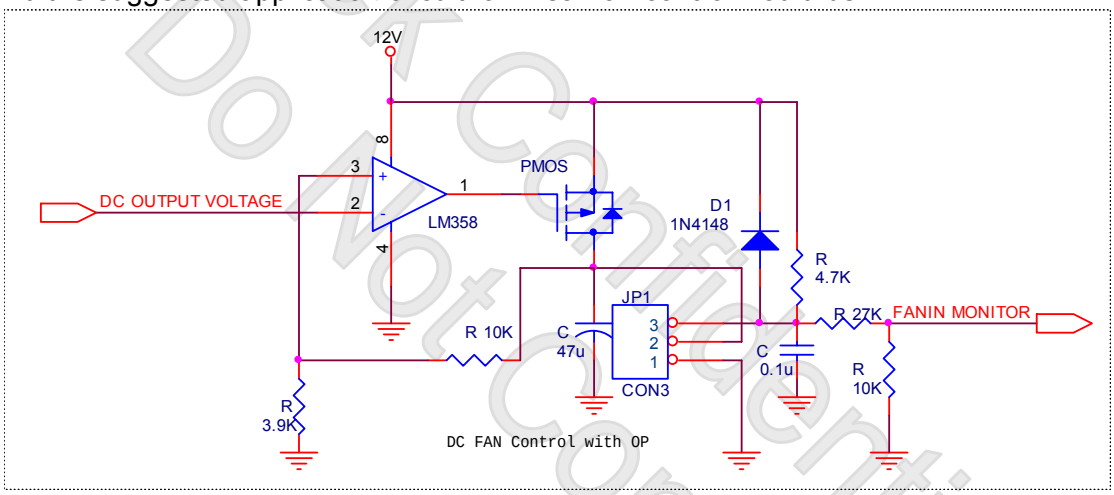

Fig 7-9

PWM duty Fan Control

The duty cycle of PWM can be programmed by a 8-bit register. The default duty cycle is set to 100%, that is, the default 8-bit registers is set to FFh. The expression of duty can be represented as follows.

$$\text{Duty_cycle(\%)} = \frac{\text{Programmed 8bit Register Value}}{255} \times 100\%$$

Fintek Confidential Do Not Copy!

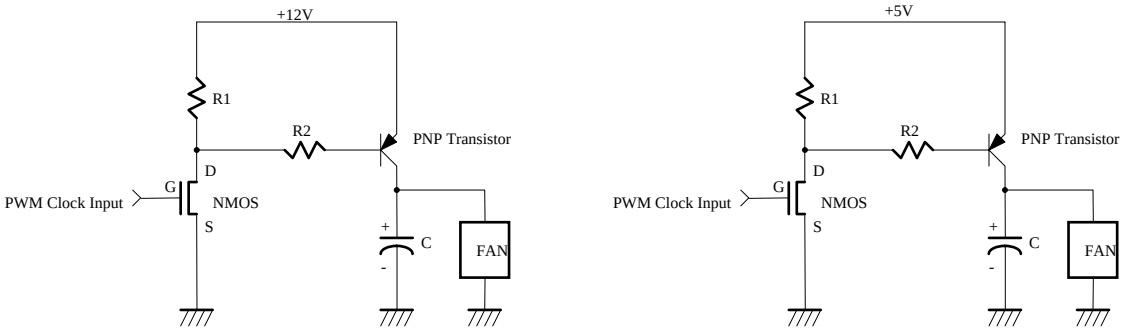

Fig 7-10

Fan speed control mechanism

There are some modes to control fan speed and they are 1.Manual mode, 2.Stage auto mode, 3. Linear auto mode. More detail, please refer the description of registers.

Manual mode

For manual mode, it generally acts as software fan speed control.

Stage auto mode

At this mode, the F71882 provides automatic fan speed control related to temperature variation of CPU/GPU or the system. The F71882 can provide four temperature boundaries and five intervals, and each interval has its related fan speed count. All these values should be set by BIOS first. Take figure 7-11 as example. When temperature boundaries are set as 45, 55, 65, and 75°C and there are five intervals (each interval is 10(C). The related desired fan speed counts for each interval are 0500h, 0400h, 0300h, 0200h and 0100h. When the temperature is within 55~65(C, the fan speed count 300h will be load into FAN EXPECT COUNT that define in registers. Then, the F71882 will adjust PWMOUT duty-cycle to meet the expected value. It can be said that the fan will be turned on with a specific speed set by BIOS and automatically controlled with the temperature variation. The F71882 will take charge of all the fan speed control and need no software support.

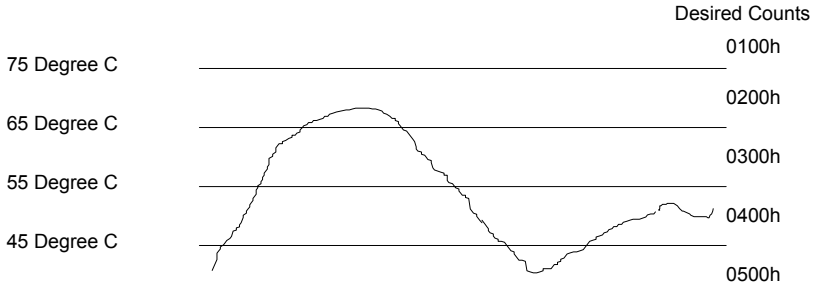

Figure 7-11

Fintek Confidential
Do Not Copy!

There are some examples as below:

A. Stage auto mode (PWM Duty)

Set temperature as 60°C, 50°C, 40°C, 30°C and Duty as 100%, 90%, 80%, 70%, 60%

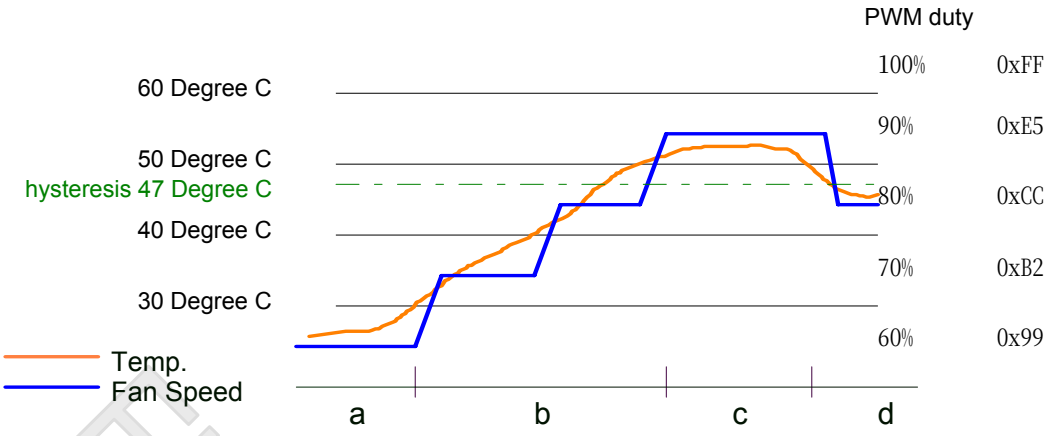

a. Once temp. is under 30°C, the lowest fan speed keeps 60% PWM duty
b. Once temp. is over 30°C,40°C,50°C, the fan speed will vary from 60% to 90% PWM duty and increase with temp. level.
c. Once temp. keeps in 55°C, fan speed keeps in 90% PWM duty
d. If set the hysteresis as 3°C (default 4°C), once temp reduces under 47°C, fan speed reduces to 80% PWM duty and stays there.

B. Stage auto mode (RPM%)

Set temperature as 60°C, 50°C, 40°C, 30°C and assume the Full Speed is 6000rpm, set 90% of full speed RPM(5400rpm), 80%(4800rpm), 70%(4200rpm), 60%(3600rpm) of full speed RPM

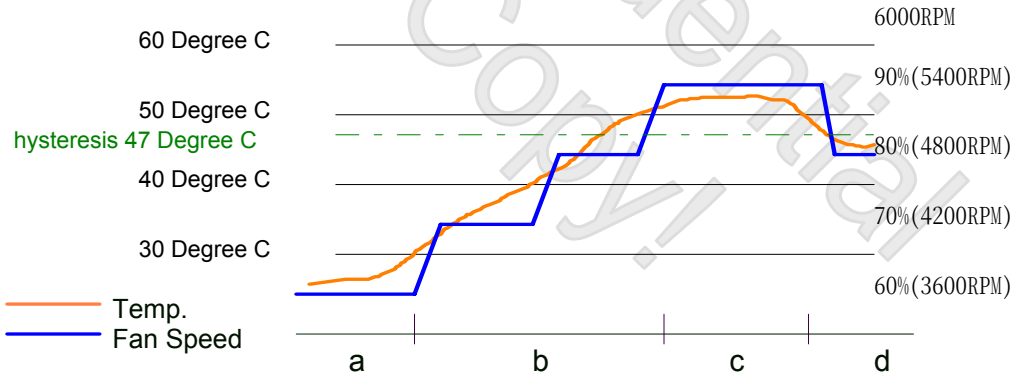

a. Once temp. is under 30°C, the lowest fan speed keeps 60% of full speed (3600RPM).
b. Once temp. is over 30°C,40°C,50°C, the fan speed will vary from 3600RPM to 5400RPM and increase with temp. level.
c.Once temp. keeps in 55°C, fan speed keeps in 90% of full speed (5400RPM)
d. If set the hysteresis as 3°C (default 4°C), once temp reduces under 47°C, fan speed reduces to 4800RPM and stays there.

Fintek Confidential Do Not Copy!

Linear auto mode

Otherwise, F71882 supports linear auto mode. Below has two examples to describe this mode. More detail, please refer the register description.

A. Linear auto mode (PWM Duty I)

Set temperature as 70°C, 60°C, 50°C, 40°C and Duty as 100%, 70%, 60%, 50%, 40%

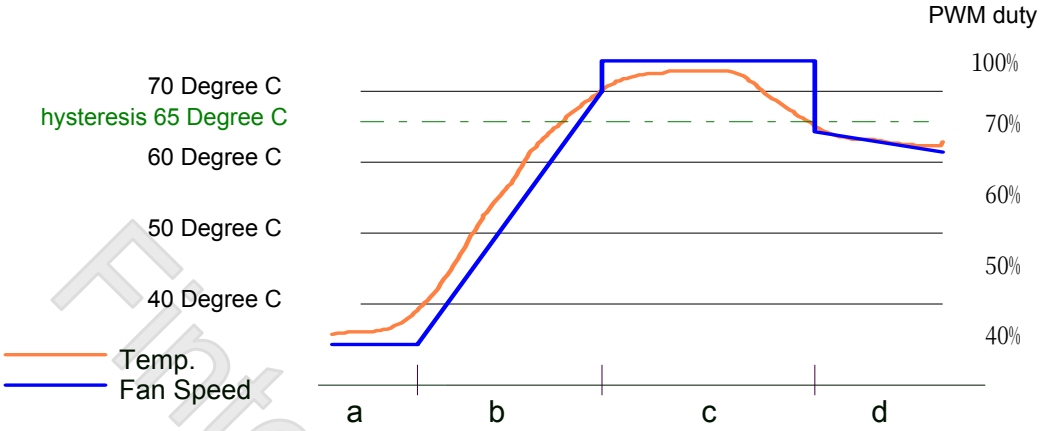

a. Once temp. is under 40°C, the lowest fan speed keeps 40% PWM duty
b. Once temp. is over 40°C,50°C,60°C, the fan speed will vary from 40% to 70% PWM duty and linearly increase with temp. variation. The temp.-fan speed monitoring and flash interval is 1sec.
c. Once temp. goes over 70°C, fan speed will directly increase to 100% PWM duty (full speed)
d. If set the hysteresis as 5°C(default is 4°C), once temp reduces under 65°C (not 70°C), fan speed reduces from 100% PWM duty and decrease linearly with temp..

B. Linear auto mode (RPM%)

Set temperature as 70°C, 60°C, 50°C, 40°C and if full speed is 6000RPM, setting 100%, 70%, 60%, 50%, 40% of full speed.

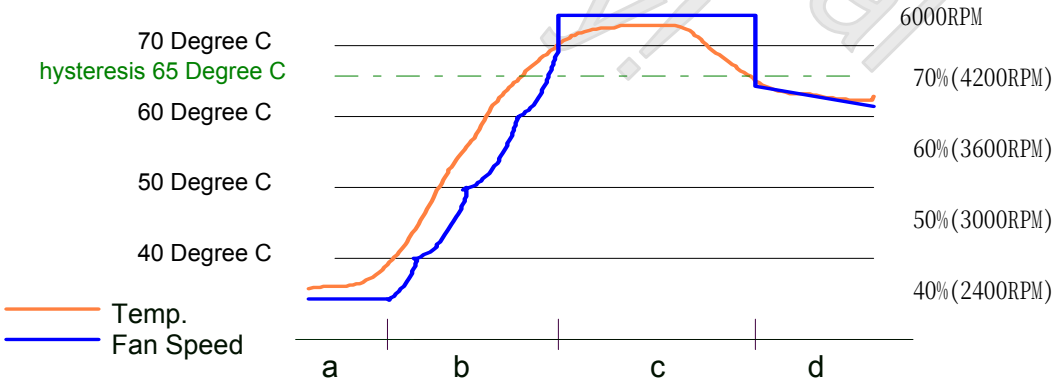

a. Once temp. is under 40°C, the lowest fan speed keeps 40% of full speed (2400RPM)
b. Once temp. is over 40°C,50°C,60°C, the fan speed will vary from 40% to 70% of full

Fintek Confidential
Do Not Copy

speed and almost linearly increase with temp. variation. The temp.-fan speed monitoring and flash interval is 1sec.

c. Once temp. goes over 70°C, fan speed will directly increase to full speed 6000RPM.

d. If set the hysteresis as 5°C, once temp reduces under 65°C (not 70°C), fan speed reduces from full speed and decrease linearly with temp..

PWMOUT Duty-cycle operating process

In both "Manual RPM" and "Temperature RPM" modes, the F71882 adjust PWMOUT duty-cycle according to current fan count and expected fan count. It will operate as follows:

(1). When expected count is 0xFFF, PWMOUT duty-cycle will be set to 0x00 to turn off fan.

(2). When expected count is 0x000, PWMOUT duty-cycle will be set to 0xFF to turn on fan with full speed.

(3). If both (1) and (2) are not true,

(4). When PWMOUT duty-cycle decrease to MIN_DUTY(≠ 00h), obviously the duty-cycle will decrease to 00h next, the F71882 will keep duty-cycle at 00h for 1.6 seconds. After that, the F71882 starts to compare current fan count and expected count in order to increase or decrease its duty-cycle. This ensures that if there is any glitch during the period, the F71882 will ignore it.

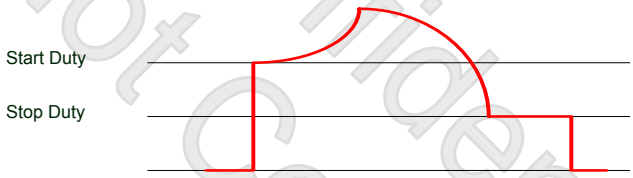

Fig 7-12

FAN_FAULT#

Fan_Fault# will be asserted when the fan speed doesn't meet the expected fan speed within a programmable period (default is 11 seconds) or when fan stops with respect to PWM duty-cycle which should be able to turn on the fan. There are two conditions may cause the FAN_FAULT# event.

(1). When PWM_Duty reaches 0xFF, the fan speed count can't reach the fan expected count in time. (Figure 7-13)

Fintek Confidential Do Not Copy!

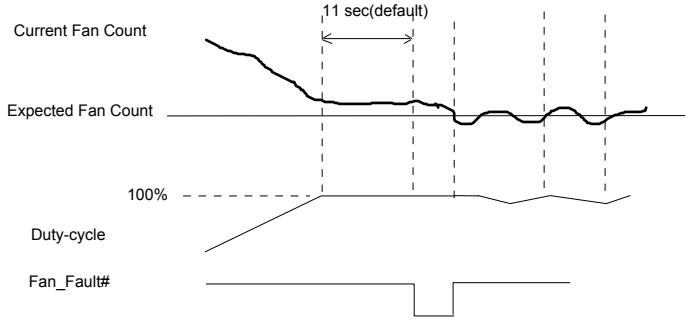

Fig 7-13

(2). After the period of detecting fan full speed, when PWM_Duty > Min. Duty, and fan count still in 0xFFF.

7.6 Keyboard Controller

The KBC provides the functions included a keyboard and a PS/2 mouse, and can be used with IBM(-compatible personal computers or PS/2-based systems. The controller receives serial data from the keyboard or PS/2 mouse, checks the parity of the data, and presents the data to the system as a byte of data in its output buffer. The controller will assert an interrupt to the system when data are placed in its output buffer.

The below content is about the KBC device register descriptions. All the registers are for software porting reference.

Status Register

The status register is an 8 bits register at I/O address 64h that provides information about the status of the KBC

Bit	Name	R/W	Default	Description
7	Parity error	R	0	0:odd parity 1:even parity
6	Time out	R	0	0:no time out error 1:time out error
5	Auxiliary device OBF	R	0	0: Auxiliary output buffer empty 1: Auxiliary output buffer full
4	Inhinit	R	0	0:keyboard is inhibited 1: keyboard is not inhibited
3	Command/data	R	0	0:data byte 1:command byte
2	SYSTEM_FLAG	R	0	This bit is set or clear by command byte of KBC
1	IBF	R	0	0:input buffer empty 1: input buffer full
0	OBF	R	0	0:output buffer empty 1: output buffer full

Fintek Confidential
Do Not Copy

Command register

The internal KBC operation is controlled by the KBC command byte (KCCB). The KCCB resides in I/O address 64h that is read with a 20h command and written with a 60h command data.

Bit	Name	R/W	Default	Description
7	Reserved	-	-	Reserved
6	Translate code	R/W	1	0: Pass un-translated scan code. 1: Translate scan code to IBM PC standard.
5	Disable Auxiliary Device	R/W	0	1: Disable Auxiliary inhibit function.
4	Disable Keyboard	R/W	0	1: Disable keyboard inhibit function.
3	Reserved	-	-	Reserved
2	System flag	R/W	1	0: The system is executing POST as a result of a cold boot. 1: The system is executing POST as a result of a shutdown or warm boot.
1	Enable Auxiliary Interrupt	R/W	1	0: Ao interrupt 1: A system interrupt is generated when a byte is placed in output buffer (IRQ12).
0	Enable keyboard Interrupt	R/W	1	0:No interrupt 1: A system interrupt is generated when a byte is placed in output buffer (IRQ1).

DATA register

The DATA register is an 8 bits register at I/O address 60h. the KBC used the output buffer to send the scan code received from keyboard and data byte replay by command to the system.

Power on default <7:0> = 00000000 binary

7.7 SPI Interface

Communication between the two devices is handling the serial peripheral interface (SPI). Every SPI system consist of one master and one or more slaves, where a master provides the SPI clock and slave receives clock from the master.

This design is only master function, for basic signal, master-out/slave-in (MOSI), master-in/slave-out (MISO), serial clock (SCK), and 4 slaves select (SS), are needed for SPI interface. Each of slave select supports from 512kbits to 4096kbits flash is decided by configuration register. Serial clock (SCK) signal frequency is varied from 24MHz to 187.5 KHz. The serial data (MOSI) for SPI interface translates to depend on SCK rising edge or falling edge is decided by configuration register.

Fintek Confidential
Do Not Copy

7.8 ACPI Function

The Advanced Configuration and Power Interface (ACPI) is a system for controlling the use of power in a computer. It lets computer manufacturer and user to determine the computer's power usage dynamically.

There are three ACPI states that are of primary concern to the system designer and they are designated S0, S3 and S5. S0 is a full-power state; the computer is being actively used in this state. The other two are called sleep states and reflect different power consumption when power-down. S3 is a state that the processor is powered down but the last procedural state is being stored in memory which is still active. S5 is a state that memory is off and the last procedural state of the processor has been stored to the hard disk. Take S3 and S5 as comparison, since memory is fast, the computer can quickly come back to full-power state, the disk is slower than the memory and the computer takes longer time to come back to full-power state. However, since the memory is off, S5 draws the minimal power comparing to S0 and S3.

It is anticipated that only the following state transitions may happen:

S0→S3, S0→S5, S5→S0, S3→S0 and S3→S5.

Among them, S3→S5 is illegal transition and won't be allowed by state machine. It is necessary to enter S0 first in order to get to S5 from S3. As for transition S5→S3 will occur only as an immediate state during state transition from S5→S0. It isn't allowed in the normal state transition.

The below diagram described the timing, the always on and always off, keep last state could be set in control register. In keep last state mode, one register will keep the status of before power loss. If it is power on before power loss, it will remain power on when power is resumed, otherwise, if it is power off before power loss, it will remain power off when power is resumed.

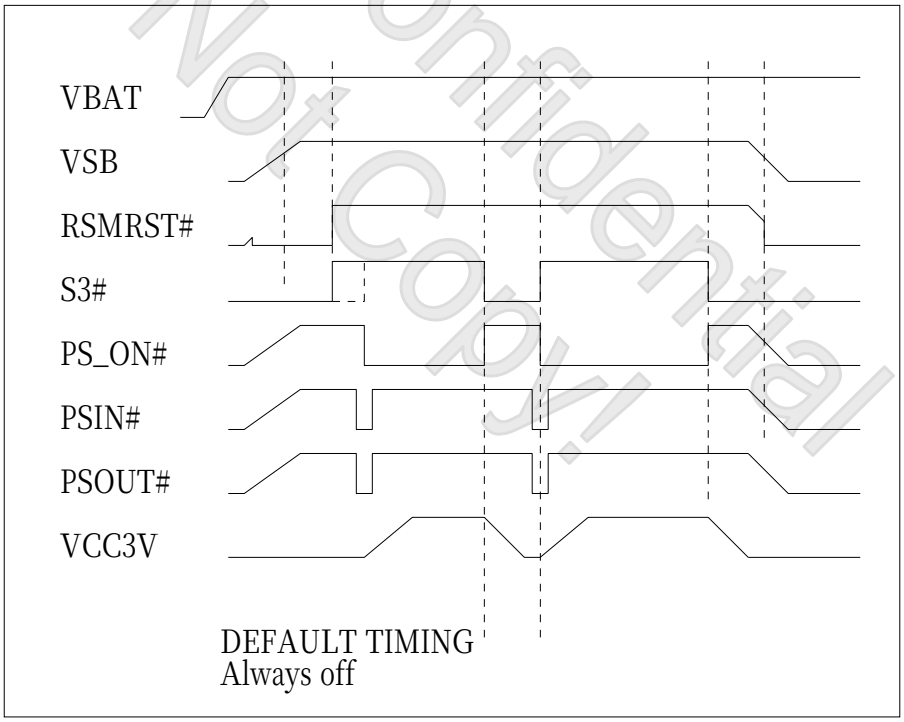

Fintek Confidential
Do Not Copy!

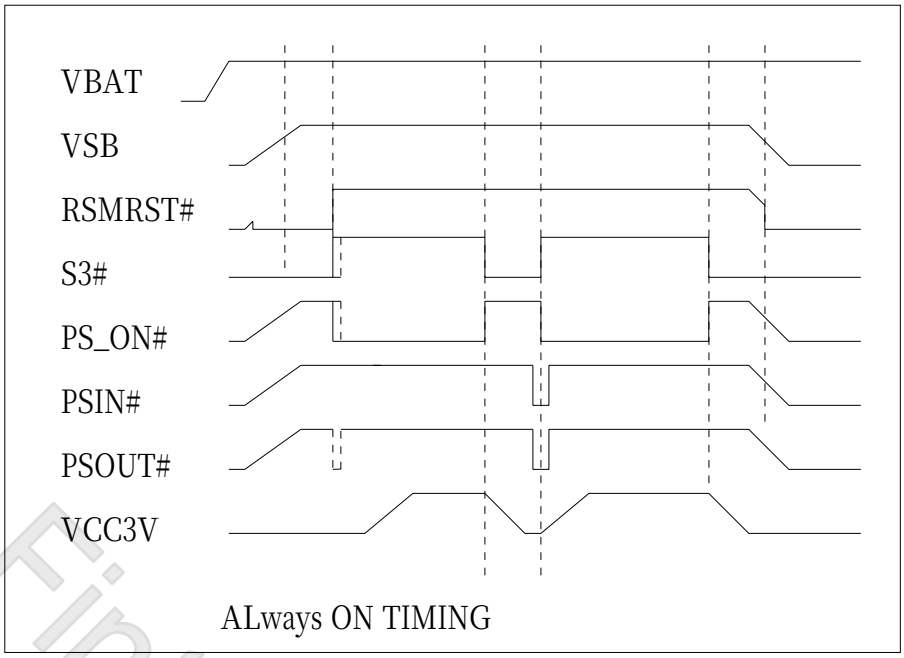

PCI Reset and PWROK Signals

The F71882 supports 3 output buffers for 3 reset signals. If the register RSTCON_EN is set to 1, the pin RSTCON# will infect PCIRST1# ~ PCIRST3# outcome. Then, the result of PCIRST# outcome will be affected by conditions as below:

PCIRST1# → Output buffer of RSTCON# and LRESET#.
PCIRST2# → Output buffer of RSTCON# and LRESET#.
PCIRST3# → Output buffer of RSTCON# and LRESET#.

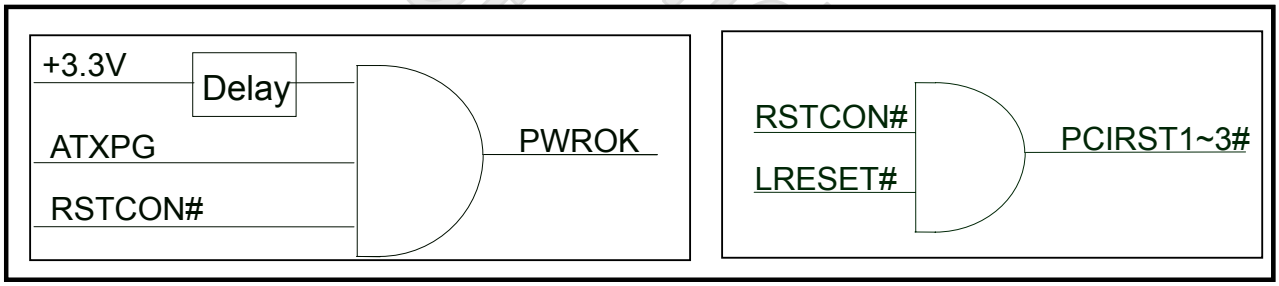

So far as the PWROK issue is as the figure above. PWROK is delayed 400ms (default) as VCC arrives 2.8V, and the delay timing can be programmed by register. (100ms ~ 400ms)

In the figure, the RSTCON# will be implemented by register RSTCON_EN. If RSTCON_EN be set to 0, the RSTCON# pin will affect PWROK outputs(Default). If RSTCON_EN be set to 1, the RSTCON# pin will affect PCIRST outputs.

Fintek Confidential Do Not Copy!

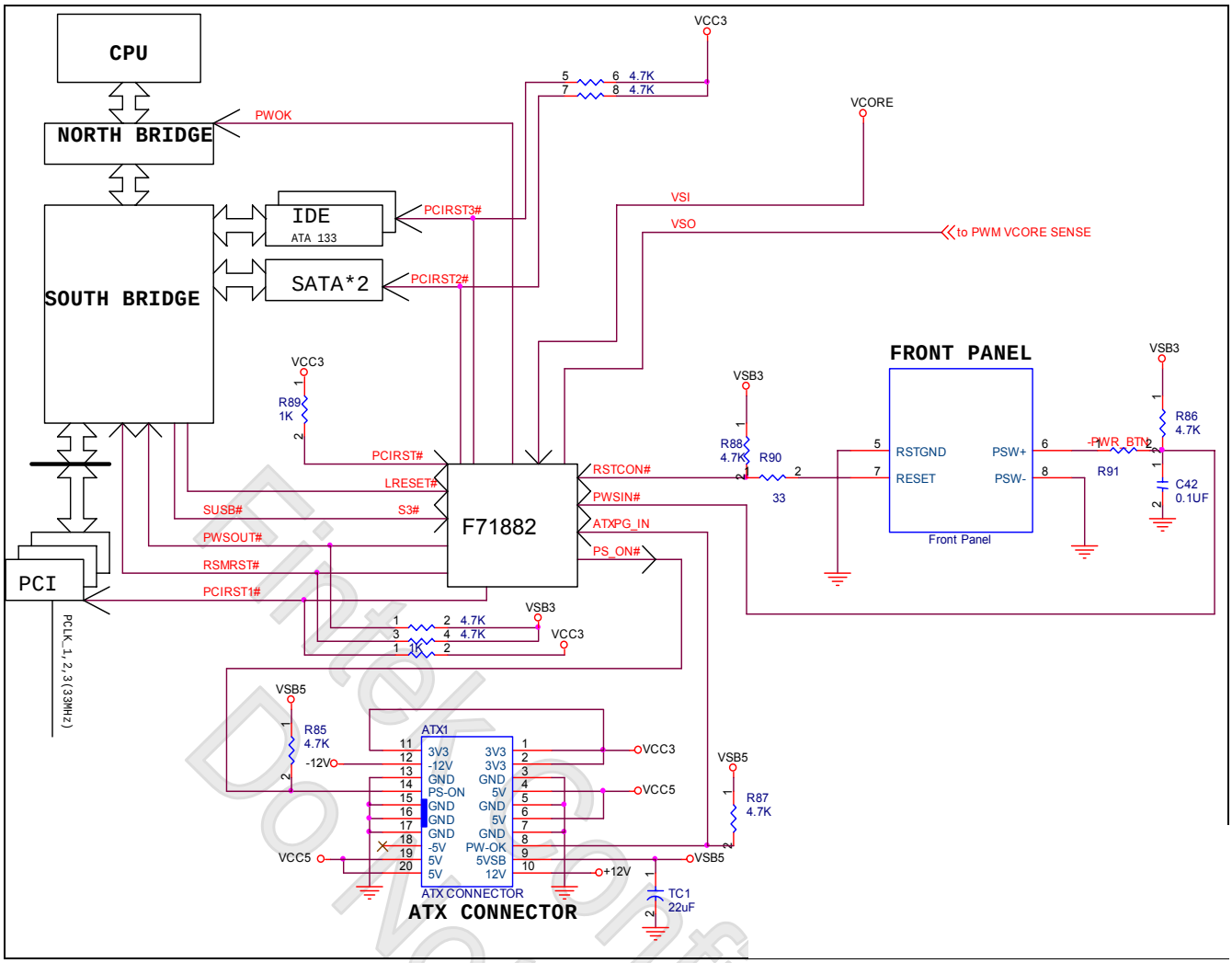

ACPI Reference Circuit

7.9 AMDSI and Intel SST PECI Function

The F71882 provides Intel SST/PECI/AMDSI interfaces for new generational CPU temperature sensing. In AMDSI interface, there are SIC and SID signals for temperature information reading from AMD CPU. The SIC signal is for clocking use, the other is for data transferring. More detail please refer register description.

Fintek Confidential
Do Not Copy

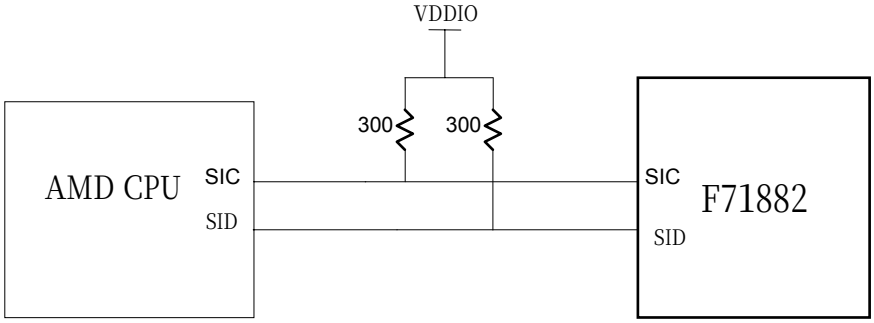

In Intel SST and PECI interfaces, the F71882 can connect to CPU/SST directly. The F71882 can read the temperature data from CPU, than the fan control machine of F71882 can implement the Fan to cool down CPU temperature. As same as PECI, chipset can get information from F71882 including CPU temperature, system temperature (F71882 provides D+/D- for system temperature sensing), fan speed status by SST. The application circuit is as below. More detail please refer the register description.

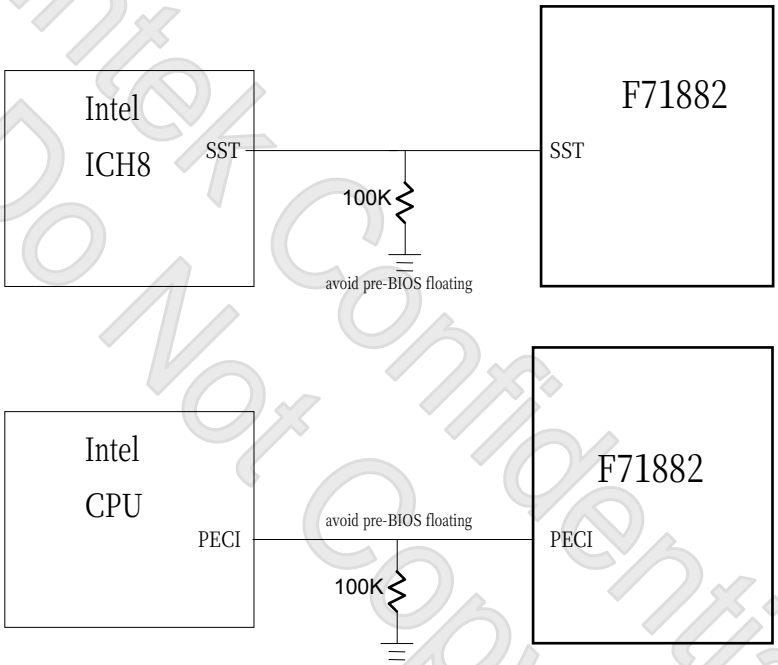

Fintek Confidential
Do Not Copy!

8. Register Description

The configuration register is used to control the behavior of the corresponding devices. To configure the register, using the index port to select the index and then writing data port to alter the parameters. The default index port and data port are 0x4E and 0x4F respectively. Pull down the SOUT1 pin to change the default value to 0x2E/0x2F. To enable configuration, the entry key 0x87 must be written to the index port. To disable configuration, write exit key 0xAA to the index port. Following is a example to enable configuration and disable configuration by using debug.

-o 4e 87
-o 4e 87 (enable configuration)
-o 4e aa (disable configuration)

The Following is a register map (total devices) grouped in hexadecimal address order, which shows a summary of all registers and their default value. Please refer each device chapter if you want more detail information.

Fintek Confidential
Do Not Copy

Global Control Registers

"-" Reserved or Tri-State

Global Control Registers									
Register 0x[HEX]	**Register Name**	**Default Value**							
		MSB							**LSB**
02	Software Reset Register	-	-	-	-	-	-	-	0
07	Logic Device Number Register (LDN)	0	0	0	0	0	0	0	0
20	Chip ID Register	0	0	0	0	0	1	0	1
21	Chip ID Register	0	1	0	0	0	0	0	1
23	Vender ID Register	0	0	0	1	1	0	0	1
24	Vender ID Register	0	0	1	1	0	1	0	0
25	Software Power Down Register	-	-	0	0	0	0	0	0
26	UART IRQ Sharing Register	0	-	-	-	-	-	0	0
27	ROM Address Select Register	0	0/1	1/0	1/0	0/1	0/1	0/1	0
28	Power LED Function Select Register	-	1/0	0/1	0	0	0	0	0
29	Multi Function Select 1 Register	0	0	0	0	0	0	0	0
2A	Multi Function Select 2 Register	0	0	0	0	0	0	0	0
2B	Multi Function Select 3 Register	0	0	0	0	0	0	0	0
2C	Multi Function Select 4 Register	0	0	0	0	1	0	0	0

2D	Wakeup Control Register	0	-	-	-	1	0	0	0

Device Configuration Registers

"-" Reserved or Tri-State

FDC Device Configuration Registers (LDN CR00)									
Register 0x[HEX]	**Register Name**	**Default Value**							
		MSB							**LSB**
30	FDC Device Enable Register	-	-	-	-	-	-	-	1
60	Base Address High Register	0	0	0	0	0	0	1	1
61	Base Address Low Register	1	1	1	1	0	0	0	0
70	IRQ Channel Select Register	-	-	-	-	0	1	1	0
74	DMA Channel Select Register	-	-	-	-	-	0	1	0
F0	FDD Mode Register	-	-	-	-	1	1	1	0
F2	FDD Drive Type Register	-	-	-	-	-	-	1	1
F4	FDD Selection Register	-	-	-	0	0	-	0	0

UART1 Device Configuration Registers (LDN CR01)									
Register 0x[HEX]	**Register Name**	**Default Value**							
		MSB							**LSB**
30	UART1 Device Enable Register	-	-	-	-	-	-	-	1
60	Base Address High Register	0	0	0	0	0	0	1	1
61	Base Address Low Register	1	1	1	1	1	0	0	0
70	IRQ Channel Select Register	-	-	-	-	0	1	0	0
F0	RS485 Enable Register	-	-	-	0	-	-	-	-

UART2 Device Configuration Registers (LDN CR02)									
Register 0x[HEX]	**Register Name**	**Default Value**							
		MSB							**LSB**
30	UART2 Device Enable Register	-	-	-	-	-	-	-	1
60	Base Address High Register	0	0	0	0	0	0	1	0
61	Base Address Low Register	1	1	1	1	1	0	0	0
70	IRQ Channel Select Register	-	-	-	-	0	0	1	1
F0	RS485 Enable Register	-	-	-	0	0	0	-	-
F1	SIR Mode Control Register	-	-	-	0	0	1	0	0

Parallel Port Device Configuration Registers (LDN CR03)									
Register 0x[HEX]	**Register Name**	**Default Value**							
		MSB							**LSB**
30	Parallel Port Device Enable Register	-	-	-	-	-	-	-	1
60	Base Address High Register	0	0	0	0	0	0	1	1
61	Base Address Low Register	0	1	1	1	1	0	0	0

Fintek Confidential
Do Not Copy.

70	IRQ Channel Select Register	-	-	-	-	0	1	1	1
74	DMA Channel Select Register	-	-	-	0	-	0	1	1
F0	PRT Mode Select Register	0	1	0	0	0	0	1	0

Hardware Monitor Device Configuration Registers (LDN CR04)

Register 0x[HEX]	Register Name	Default Value MSB							LSB
30	H/W Monitor Device Enable Register	-	-	-	-	-	-	-	1
60	Base Address High Register	0	0	0	0	0	0	1	0
61	Base Address Low Register	1	0	0	1	0	1	0	1
70	IRQ Channel Select Register	-	-	-	-	0	0	0	0

KBC Device Configuration Registers (LDN CR05)

Register 0x[HEX]	Register Name	Default Value MSB							LSB
30	KBC Device Enable Register	-	-	-	-	-	-	-	1
60	Base Address High Register	0	0	0	0	0	0	0	0
61	Base Address Low Register	0	1	1	0	0	0	0	0
70	KB IRQ Channel Select Register	-	-	-	-	0	0	0	0
72	Mouse IRQ Channel Select Register	-	-	-	-	0	0	0	0
F0	Clock Select Register	1	0	-	-	-	-	1	1

GPIO Device Configuration Registers (LDN CR06)

Register 0x[HEX]	Register Name	Default Value MSB							LSB
F0	GPIO Output Enable Register	0	0	0	0	0	0	0	0
F1	GPIO Output Data Register	1	1	1	1	1	1	1	1
F2	GPIO Pin Status Register	-	-	-	-	-	-	-	-
F3	GPIO Drive Enable Register	0	0	0	0	0	0	0	0
E0	GPIO1 Output Enable Register	0	0	0	0	0	0	0	0
E1	GPIO1 Output Data Register	1	1	1	1	1	1	1	1
E2	GPIO1 Pin Status Register	-	-	-	-	-	-	-	-
E3	GPIO1 Drive Enable Register	0	0	0	0	0	0	0	0
D0	GPIO2 Output Enable Register	0	0	0	0	0	0	0	0
D1	GPIO2 Output Data Register	1	1	1	1	1	1	1	1
D2	GPIO2 Pin Status Register	-	-	-	-	-	-	-	-
D3	GPIO2 Drive Enable Register	0	0	0	0	0	0	0	0
C0	GPIO3 Output Enable Register	-	-	-	-	0	0	0	0
C1	GPIO3 Output Data Register	-	-	-	-	1	1	1	1
C2	GPIO3 Pin Status Register	-	-	-	-	-	-	-	-
C3	GPIO3 Drive Enable Register	-	-	-	-	0	0	0	0

Fintek Confidential
Do Not Copy

B0	GPIO4 Output Enable Register	-	-	-	-	0	0	0	0
B1	GPIO4 Output Data Register	-	-	-	-	1	1	1	1
B2	GPIO4 Pin Status Register	-	-	-	-	-	-	-	-
B3	GPIO4 Drive Enable Register	-	-	-	-	0	0	0	0

VID Device Configuration Registers (LDN CR07)

Register 0x[HEX]	Register Name	Default Value MSB							LSB
30	VID Device Enable Register	-	-	-	-	-	-	-	0
60	Base Address High Register	0	0	0	0	0	0	0	0
61	Base Address Low Register	0	0	0	0	0	0	0	0

SPI Device Configuration Registers (LDN CR08)

Register 0x[HEX]	Register Name	Default Value MSB							LSB
F0	SPI Control Register	0	0	0	1	0	0	0	0
F1	SPI Timeout Value Register	0	0	0	0	0	1	0	0
F2	SPI Baud Rate Divisor Register	-	-	-	-	-	0	0	1
F3	SPI Status Register	0	-	-	-	0	-	-	-
F4	SPI High Byte Data Register	0	0	0	0	0	0	0	0
F5	SPI Command Data Register	0	0	0	0	0	0	0	0
F6	SPI Chip Select Register	-	-	-	-	0	0	0	0
F7	SPI Memory Mapping Register	-	-	-	-	-	-	-	-
F8	SPI Operate Register	0	0	0	0	0	0	0	0
FA	SPI Low Byte Data Register	0	0	0	0	0	0	0	0
FB	SPI Address High Byte Register	0	0	0	0	0	0	0	0
FC	SPI Address Medium Byte Register	0	0	0	0	0	0	0	0
FD	SPI Address Low Byte Register	0	0	0	0	0	0	0	0
FE	SPI Program Byte Register	0	0	0	0	0	0	0	0
FF	SPI Write Data Register	0	0	0	0	0	0	0	0

PME and ACPI Device Configuration Registers (LDN CR0A)

Register 0x[HEX]	Register Name	Default Value MSB							LSB
30	PME Device Enable Register	-	-	-	-	-	-	-	0
F0	PME Event Enable Register	-	0	0	0	0	0	0	0
F1	PME Event Status Register	-	0	0	0	0	0	0	1
F4	ACPI Control Register	-	0	0	0	0	1	1	0
F5	ACPI Control Register	0	-	0	1	1	1	-	-

Fintek Confidential
Do Not Copy

8.1 Global Control Registers

8.1.1 Software Reset Register — Index 02h

Bit	Name	R/W	Default	Description
7-1	Reserved	-	-	Reserved
0	SOFT_RST	R/W	0	Write 1 to reset the register and device powered by VDD (VCC).

8.1.2 Logic Device Number Register (LDN) — Index 07h

Bit	Name	R/W	Default	Description
7-0	LDN	R/W	00h	00h: Select FDC device configuration registers. 01h: Select UART 1 device configuration registers. 02h: Select UART 2 device configuration registers. 03h: Select Parallel Port device configuration registers. 04h: Select Hardware Monitor device configuration registers. 05h: Select KBC device configuration registers. 06h: Select GPIO device configuration registers. 07h: Select VID device configuration registers. 08h: Select SPI device configuration registers. 0ah: Select PME & ACPI device configuration registers.

8.1.3 Chip ID Register — Index 20h

Bit	Name	R/W	Default	Description
7-0	CHIP_ID1	R	05h	Chip ID 1 of F71882.

8.1.4 Chip ID Register — Index 21h

Bit	Name	R/W	Default	Description
7-0	CHIP_ID2	R	41h	Chip ID2 of F71882.

8.1.5 Vendor ID Register — Index 23h

Bit	Name	R/W	Default	Description
7-0	VENDOR_ID1	R	19h	Vendor ID 1 of Fintek devices.

8.1.6 Vendor ID Register — Index 24h

Bit	Name	R/W	Default	Description
7-0	VENDOR_ID2	R	34h	Vendor ID 2 of Fintek devices.

Fintek Confidential
Do Not Copy!

8.1.7 Software Power Down Register — Index 25h

Bit	Name	R/W	Default	Description
7-6	Reserved	-	-	Reserved
5	SOFTPD_KBC	R/W	0	Power down the KBC device. This will stop the KBC clock.
4	SOFTPD_HM	R/W	0	Power down the Hardware Monitor device. This will stop the Hardware Monitor clock.
3	SOFTPD_PRT	R/W	0	Power down the Parallel Port device. This will stop the Parallel Port clock.
2	SOFTPD_UR2	R/W	0	Power down the UART 2 device. This will stop the UART 2 clock.
1	SOFTPD_UR1	R/W	0	Power down the UART 1 device. This will stop the UART 1 clock.
0	SOFTPD_FDC	R/W	0	Power down the FDC device. This will stop the FDC clock.

8.1.8 UART IRQ Sharing Register — Index 26h

Bit	Name	R/W	Default	Description
7	CLK24M_SEL	R/W	0	0: CLKIN is 48MHz 1: CLKIN is 24MHz
6-2	Reserved	-	-	Reserved.
1	IRQ_MODE	R/W	0	0: PCI IRQ sharing mode (low level). 1: ISA IRQ sharing mode (low pulse).
o	IRQ_SHAR	R/W	0	0: disable IRQ sharing of two UART devices. 1: enable IRQ sharing of two UART devices.

8.1.9 ROM Address Select Register — Index 27h

Bit	Name	R/W	Default	Description
7	ROM_WR_EN	R/W	0	0: disable ROM writing 1: enable ROM writing
6	SPI_EN	R/W	-	0: SPI disable 1: SPI enable This register is power on trapped by SOUT2/SPI_TRAP. Pull down to enable SPI.
5	BACKUP_BIOS_EN	R/W	-	0: use SPI as primary BIOS 1: use SPI as backup BIOS This register is power on trapped by DTR2#/FWH_TRAP. Pull down to select SPI as primary BIOS.
4	PORT_4E_EN	R/W	-	0: The configuration register port is 2E/2F. 1: The configuration register port is 4E/4F. This register is power on trapped by SOUT1/ Config4E_2E. Pull down to select port 2E/2F.
3	SEG_000E_EN	R/W	-	0: disable address 0x000E0000 – 0x000EFFFF decode 1: enable address 0x000E0000 – 0x000EFFFF decode This register is power on trapped by SOUT2/SPI_DIS. Pull down to enable.

Fintek Confidential
Do Not Copy!

2	SEG_FFF8_EN	R/W	-	0: disable address 0xFFF80000 – 0xFFFFFFFF and 0x000F0000 – 0x000FFFFF decode 1: enable address 0xFFF80000 – 0xFFFFFFFF and 0x000F0000 – 0x000FFFFF decode This register is power on trapped by SOUT2/SPI_DIS. Pull down to enable.
1	SEG_FFEF_EN	R/W	-	0: disable address 0xFFEE – 0xFFEFFFFF decode 1: enable address 0xFFEE0000 – 0xFFEFFFFF decode This register is power on trapped by SOUT2/SPI_DIS. Pull down to enable.
0	SEG_FFF0_EN	R/W	0	0: disable address 0xFFF00000 – 0xFFF7FFFF decode 1: enable address 0xFFF00000 – 0xFFF7FFFF decode

8.1.10 Power LED Function Select Register — Index 28h

Bit	Name	R/W	Default	Description
7	Reserved	-	-	Reserved.
6	VIDOUT_EN	R/W	-	0: The VID_OUT[5:0]/GPIO0[5:0] functions as GPIO0[5:0], and the SLOTOTCC#/GPIO06 functions as GPIO06. 1: The VID_OUT[5:0]/GPIO0[5:0] functions as VID_OUT[5:0], and the SLOTOTCC#/GPIO06 functions as SLOTOCC#. This register is power on trapped by RTS1#/VIDOUT_TRAP. Pull down to select GPIOs function.
5-4	Reserved	R/W	-	Reserved
3	GPIO43_SEL	R/W	0	0: IRRX/GPIO43 functions as IRRX. 1: IRRX/GPIO43 functions as GPIO43.
2	GPIO42_SEL	R/W	0	0: IRTX/GPIO42 functions as IRTX. 1: IRTX/GPIO42 functions as GPIO42.
1	GPIO41_SEL	R/W	0	0: FANCTRL3/GPIO41 functions as FANCTRL3. 1: FANCTRL3/GPIO41 functions as GPIO41.
0	GPIO40_SEL	R/W	0	0: FANIN3/GPIO40 functions as FANIN3. 1: FANIN3/GPIO40 functions as GPIO40.

8.1.11 Multi Function Select 1 Register — Index 29h (Powered by VSB3V)

Bit	Name	R/W	Default	Description
7-2	Reserved	R/W	0	Reserved
1	WDT_GP07_EN	R/W	0	0: GPIO07/Turbo1#/WDTRST# will function as GPIO07/Turbo1#. 1: GPIO07/Turbo1#/WDTRST# will function as WDTRST#.
0	ALERT_GP_EN	R/W	0	0: GPIO15/LED_VSB/ALERT# will function as GPIO15/LED_VSB controlled by GPIO15_SEL register. 1: GPIO15/LED_VSB/ALERT# will function as ALERT#.

8.1.12 Multi Function Select 2 Register — Index 2Ah (Powered by VSB3V)

Bit	Name	R/W	Default	Description

Fintek Confidential
Do Not Copy!

7-6	VSBLED_SEL	R/W	2'b00	VSBLED function select, powered by VSB. 00: VSBLED always output low. 01: VSBLED tri-state 10: VSBLED output 0.5Hz clock. 11: VSBLED output 1Hz clock. (clock output is inverse with VDDLED clock output)
5-4	VDDLED_SEL	R/W	2'b00	VDDLED function select, powered by VDD. 00: VDDLED always output low. 01: VDDLED tri-state 10: VDDLED output 0.5Hz clock. 11: VDDLED output 1Hz clock. (clock output is inverse with VSBLED clock output)
3	GPIO33_SEL	R/W	0	0: RSMRST#/GPIO33 functions as RSMRST#. 1: RSMRST#/GPIO33 functions as GPIO33.
2	GPIO32_SEL	R/W	0	0: PWROK/GPIO32 functions as PWROK. 1: PWROK/GPIO32 functions as GPIO32.
1	GPIO31_SEL	R/W	0	0: PS_ON#/GPIO31 functions as PS_ON#. 1: PS_ON#/GPIO31 functions as GPIO31.
0	GPIO30_SEL	R/W	0	0: S3#/GPIO30 functions as S3#. 1: S3#/GPIO30 functions as GPIO30.

8.1.13 Multi Function Select 3 Register — Index 2Bh (Powered by VSB3V)

Bit	Name	R/W	Default	Description
7	Reserved	R/W	0	Dummy register.
6	GPIO16_SEL	R/W	0	0: GPIO16/LED_VCC functions as GPIO16. 1: GPIO16/LED_VCC functions as LED_VCC.
5	GPIO15_SEL	R/W	0	When register ALERT_GP_EN is 0, the register functions as: 0: GPIO15/LED_VSB/ALERT# functions as GPIO15. 1: GPIO15/LED_VSB/ALERT# functions as LED_VSB.
4	GPIO14_SEL	R/W	0	0: GPIO14/FWH_DIS/WDTRST# functions as GPIO14 when SPI is disabled. 1: GPIO14/FWH_DIS/WDTRST# functions as WDTRST# when SPI is disabled.
3	GPIO13_SEL	R/W	0	0: GPIO13/SPI_MOSI/BEEP functions as GPIO13 when SPI is disabled. 1: GPIO13/SPI_MOSI/BEEP functions as BEEP when SPI is disabled.
2	GPIO12_SEL	R/W	0	0: GPIO12/SPI_MISO/FANCTRL1_1 functions as GPIO12 when SPI is disabled. 1: GPIO12/SPI_NISO/FANCTRL1_1 functions as FANCTRL1_1 when SPI is disabled.
1	GPIO11_SEL	R/W	0	0: GPIO11/SPI_CS0#/FANCTRL4 functions as GPIO11 when SPI is disabled. 1: GPIO11/SPI_CS0#/FANCTRL4 functions as FANCTRL4 when SPI is disabled.
0	GPIO10_SEL	R/W	0	0: GPIO10/SPI_CLK/FANIN4 functions as GPIO10 when SPI is disabled. 1: GPIO10/SPI_CLK/FANIN4 functions as FANIN4 when SPI is disabled.

Fintek Confidential Do not copy

8.1.14 Multi Function Select 4 Register — Index 2Ch (Powered by VSB3V)

Bit	Name	R/W	Default	Description
7	GPIO27_SEL	R/W	0	0: PWSOUT#/GPIO27 functions as PWSOUT#. 1: PWSOUT#/GPIO27 functions as GPIO27.
6	GPIO26_SEL	R/W	0	0: PWSIN#/GPIO26 functions as PWSIN#. 1: PWSIN#/GPIO26 functions as GPIO26.
5	GPIO25_SEL	R/W	0	0: PME#/GPIO25 functions as PME#. 1: PME#/GPIO25 functions as GPIO25.
4	GPIO24_SEL	R/W	0	0: ATXPG_IN/GPIO24 functions as ATXPG_IN. 1: ATXPG_IN/GPIO24 functions as GPIO24.
3	GPIO23_SEL	R/W	1	0: GPIO23/RSTCON# functions as RSTCON#. 1: GPIO23/RSTCON# functions as GPIO23.
2	GPIO22_SEL	R/W	0	0: PCIRST3#/GPIO22 functions as PCIRST3#. 1: PCIRST3#/GPIO22 functions as GPIO22.
1	GPIO21_SEL	R/W	0	0: PCIRST2#/GPIO21 functions as PCIRST2#. 1: PCIRST2#/GPIO21 functions as GPIO21.
0	GPIO20_SEL	R/W	0	0: PCIRST1#/GPIO20 functions as PCIRST1#. 1: PCIRST1#/GPIO20 functions as GPIO20.

8.1.15 Wakeup Control Register — Index 2Dh (Powered by VBAT)

Bit	Name	R/W	Default	Description
7	SPI_CS1_EN	R/W	0	This register decides the architecture of SPI when used as primary BIOS. 1: use two 4Mbits. (FWH_DIS will multi-functions as SPI_CS1#) 0: use one 8Mbits. (Divided into two 4Mbits. Originally use the higher part. If the higher part is booting fail, the memory address will be auto mapped to lower part.)
6-4	Reserved	R/W	0	Reserved.
3	WAKEUP_EN	R/W	1	0: disable keyboard/mouse wake up. 1: enable keyboard/mouse wake up.
2-1	KEY_SEL	R/W	00	This registers select the keyboard wake up key. 00: Wake up key is Ctrl + Esc. 01: Wake up key is Ctrl + F1. 10: Wake up key is Ctrl + Space. 11: Wake up key is any key.
0	MO_SEL	R/W	0	This register select the mouse wake up key. 0: Wake up by click. 1: Wake up by click and movement.

Fintek Confidential
Do Not Copy

8.2 FDC Registers (CR00)

8.2.1 FDC Configuration Registers

FDC Device Enable Register — Index 30h

Bit	Name	R/W	Default	Description
7-1	Reserved	-	-	Reserved
0	FDC_EN	R/W	1	0: disable FDC. 1: enable FDC.

Base Address High Register — Index 60h

Bit	Name	R/W	Default	Description
7-0	BASE_ADDR_HI	R/W	03h	The MSB of FDC base address.

Base Address Low Register — Index 61h

Bit	Name	R/W	Default	Description
7-0	BASE_ADDR_LO	R/W	F0h	The LSB of FDC base address.

IRQ Channel Select Register — Index 70h

Bit	Name	R/W	Default	Description
7-4	Reserved	-	-	Reserved.
3-0	SELFDCIRQ	R/W	06h	Select the IRQ channel for FDC.

DMA Channel Select Register — Index 74h

Bit	Name	R/W	Default	Description
7-3	Reserved	-	-	Reserved.
2-0	SELFDCDMA	R/W	010	Select the DMA channel for FDC.

Fintek Confidential
Do Not Copy

FDD Mode Register — Index F0h

Bit	Name	R/W	Default	Description
7-4	Reserved	-	-	Reserved.
3-2	IF_MODE	R/W	11	00: Model 30 mode. 01: PS/2 mode. 10: Reserved. 11: AT mode (default).
1	FDMAMODE	R/W	1	0: enable burst mode. 1: non-busrt mode (default).
0	EN3MODE	R/W	0	0: normal floppy mode (default). 1: enhanced 3-mode FDD.

FDD Drive Type Register — Index F2h

Bit	Name	R/W	Default	Description
7-2	Reserved	-	-	Reserved.
1-0	FDD_TYPE	R/W	11	FDD drive type.

FDD Selection Register — Index F4h

Bit	Name	R/W	Default	Description
7-5	Reserved	-	-	Reserved.
4-3	FDD_DRT	R/W	00	Data rate table select, refer to table A. 00: select regular drives and 2.88 format. 01: 3-mode drive. 10: 2 mega tape. 11: reserved.
2	Reserved	-	-	Reserved.
1-0	FDD_DT	R/W	00	Drive type select, refer to table B.

Fintek Confidential
Do Not Copy

TABLE A

Data Rate Table Select		Data Rate		Selected Data Rate		DENSEL
FDD_DRT[1]	FDD_DRT[0]	DATARATE1	DATARATE0	MFM	FM	
0	0	0	0	500K	250K	1
		0	1	300K	150K	0
		1	0	250K	125K	0
		1	1	1Meg	---	1
0	1	0	0	500K	250K	1
		0	1	500K	250K	0
		1	0	250K	125K	0
		1	1	1Meg	---	1
1	0	0	0	500K	250K	1
		0	1	2Meg	---	0
		1	0	250K	125K	0
		1	1	1Meg	---	1

TABLE B

Drive Type		DRVDEN0	Remark
FDD_DT1	FDD_DT0		
0	0	DENSEL	4/2/1 MB 3.5” 2/1 MB 5.25” 1/1.6/1 MB 3.5” (3-Mode)
0	1	DATARATE1	
1	0	DENSEL#	
1	1	DATARATE0	

Fintek Confidential
Do Not Copy!

8.3 UART1 Registers (CR01)

8.3.1 UART 1 Configuration Registers

UART 1 Device Enable Register — Index 30h

Bit	Name	R/W	Default	Description
7-1	Reserved	-	-	Reserved
0	UR1_EN	R/W	1	0: disable UART 1. 1: enable UART 1.

Base Address High Register — Index 60h

Bit	Name	R/W	Default	Description
7-0	BASE_ADDR_HI	R/W	03h	The MSB of UART 1 base address.

Base Address Low Register — Index 61h

Bit	Name	R/W	Default	Description
7-0	BASE_ADDR_LO	R/W	F8h	The LSB of UART 1 base address.

IRQ Channel Select Register — Index 70h

Bit	Name	R/W	Default	Description
7-4	Reserved	-	-	Reserved.
3-0	SELUR1IRQ	R/W	4h	Select the IRQ channel for UART 1.

RS485 Enable Register — Index F0h

Bit	Name	R/W	Default	Description
7-5	Reserved	-	-	Reserved.
4	RS485_EN	R/W	0	0: RS232 driver. 1: RS485 driver. Auto drive RTS# high when transmitting data.
3-0	Reserved	-	-	Reserved.

Fintek Confidential
Do Not Copy

8.4 UART 2 Registers (CR02)

8.4.1 UART 2 Configuration Registers

UART 2 Device Enable Register — Index 30h

Bit	Name	R/W	Default	Description
7-1	Reserved	-	-	Reserved
0	UR2_EN	R/W	1	0: disable UART 2. 1: enable UART 2.

Base Address High Register — Index 60h

Bit	Name	R/W	Default	Description
7-0	BASE_ADDR_HI	R/W	02h	The MSB of UART 2 base address.

Base Address Low Register — Index 61h

Bit	Name	R/W	Default	Description
7-0	BASE_ADDR_LO	R/W	F8h	The LSB of UART 2 base address.

IRQ Channel Select Register — Index 70h

Bit	Name	R/W	Default	Description
7-4	Reserved	-	-	Reserved.
3-0	SELUR2IRQ	R/W	3h	Select the IRQ channel for UART 2.

RS485 Enable Register — Index F0h

Bit	Name	R/W	Default	Description
7-5	Reserved	-	-	Reserved.
4	RS485_EN	R/W	0	0: RS232 driver. 1: RS485 driver. Auto drive RTS# high when transmitting data.

Fintek Confidential
Do Not Copy

3	RXW4C_IR	R/W	0	0: No reception delay when SIR is changed form TX to RX. 1: Reception delays 4 characters time when SIR is changed form TX to RX.
2	TXW4C_IR	R/W	0	0: No transmission delay when SIR is changed form RX to TX. 1: Transmission delays 4 characters time when SIR is changed form RX to TX.
1-0	Reserved	-	-	Reserved.

SIR Mode Control Register — Index F1h

Bit	Name	R/W	Default	Description
7	Reserved	-	-	Reserved.
6	Reserved	-	-	Reserved.
5	Reserved	-	-	Reserved.
4-3	IRMODE	R/W	00	00: disable IR function. 01: disable IR function. 10: IrDA function, active pulse is 1.6uS. 11: IrDA function, active pulse is 3/16 bit time.
2	HDUPLX	R/W	1	0: SIR is in full duplex mode for loopbak test. TXW4C_IR and RXW4C_IR are of no use. 1: SIR is in half duplex mode.
1	TXINV_IR	R/W	0	0: IRTX is in normal condition. 1: inverse the IRTX.
0	RXINV_IR	R/W	0	0: IRRX is in normal condition. 1: inverse the IRRX.

Fintek Confidential
Do Not Copy!

8.5 Parallel Port Registers (CR03)

8.5.1 Parallel Port Configuration Registers

Parallel Port Device Enable Register — Index 30h

Bit	Name	R/W	Default	Description
7-1	Reserved	-	-	Reserved
0	PRT_EN	R/W	1	0: disable Parallel Port. 1: enable Parallel Port.

Base Address High Register — Index 60h

Bit	Name	R/W	Default	Description
7-0	BASE_ADDR_HI	R/W	03h	The MSB of Parallel Port base address.

Base Address Low Register — Index 61h

Bit	Name	R/W	Default	Description
7-0	BASE_ADDR_LO	R/W	78h	The LSB of Parallel Port base address.

IRQ Channel Select Register — Index 70h

Bit	Name	R/W	Default	Description
7-4	Reserved	-	-	Reserved.
3-0	SELPRTIRQ	R/W	7h	Select the IRQ channel for Parallel Port.

DMA Channel Select Register — Index 74h

Bit	Name	R/W	Default	Description
7-5	Reserved	-	-	Reserved.
4	ECP_DMA_MODE	R/W	0	0: non-burst mode DMA. 1: enable burst mode DMA.
3	Reserved	-	-	Reserved.
2-0	SELPRTDMA	R/W	011	Select the DMA channel for Parallel Port.

Fintek Confidential
Do not Copy!

PRT Mode Select Register — Index F0h

Bit	Name	R/W	Default	Description
7	SPP_IRQ_MODE	R/W	0	Interrupt mode in non-ECP mode. 0: Level mode. 1: Pulse mode.
6-3	ECP_FIFO_THR	R/W	1000	ECP FIFO threshold.
2-0	PRT_MODE	R/W	010	000: Standard and Bi-direction (SPP) mode. 001: EPP 1.9 and SPP mode. 010: ECP mode (default). 011: ECP and EPP 1.9 mode. 100: Printer mode. 101: EPP 1.7 and SPP mode. 110: Reserved. 111: ECP and EPP1.7 mode.

Fintek Confidential
Do Not Copy!

8.6 Hardware Monitor Registers (CR04)

8.6.1 Hardware Monitor Configuration Registers

Hardware Monitor Device Enable Register — Index 30h

Bit	Name	R/W	Default	Description
7-1	Reserved	-	-	Reserved
0	HM_EN	R/W	1	0: disable Hardware Monitor. 1: enable Hardware Monitor.

Base Address High Register — Index 60h

Bit	Name	R/W	Default	Description
7-0	BASE_ADDR_HI	R/W	02h	The MSB of Hardware Monitor base address.

Base Address Low Register — Index 61h

Bit	Name	R/W	Default	Description
7-0	BASE_ADDR_LO	R/W	95h	The LSB of Hardware Monitor base address.

IRQ Channel Select Register — Index 70h

Bit	Name	R/W	Default	Description
7-4	Reserved	-	-	Reserved.
3-0	SELHMIRQ	R/W	0000	Select the IRQ channel for Hardware Monitor.

8.6.2 Device Registers

Before the device registers, the following is a register map order which shows a summary of all registers. Please refer each one register if you want more detail information.

Register CR01 ~ CR03 → Configuration Registers

Register CR10 ~ CR4F → Voltage Setting Register

Fintek Confidential
Do Not Copy

Register CR60 ~ CR8E → Temperature Setting Register

Register CR90 ~ CRDF → Fan Control Setting Register

→Fan1 Detail Setting CRA0 ~ CRAF

→Fan2 Detail Setting CRB0 ~ CRBF

→Fan3 Detail Setting CRC0 ~ CRCF

→Fan4 Detail Setting CRD0 ~ CRDF

8.6.2.1 HW Monitor Config. Register — Index 01h

Bit	Name	R/W	Default	Description
7-3	Reserved	0h	0	Reserved
2	POWER_DOWN	R/W	0	Hardware monitor function power down.
1	FAN_START	R/W	1	Set one to enable startup of fan monitoring operations; a zero puts the part in standby mode.
0	V_T_START	R/W	1	Set one to enable startup of temperature and voltage monitoring operations; a zero puts the part in standby mode.

8.6.2.2 BEEP OVT ALERT Config. Register — Index 02h

Bit	Name	R/W	Default	Description
7	Reserved	R/W	0	Dummy register.
6	CASE_BEEP_EN	R/W	0	0: Disable case open event output via BEEP. 1: Enable case open event output via BEEP.
5-4	OVT_MODE	R/W	0	00: The OVT# will be low active level mode. 01: The OVT# will be high active level mode. 10: The OVT# will indicate by 1Hz LED function. 11: The OVT# will indicate by (400/800HZ) BEEP output.
3	Reserved	R/W	0	Dummy register.
2	CASE_SMI_EN	R/W	0	0: Disable case open event output via PME. 1: Enable case open event output via PME.
1-0	ALERT_MODE	R/W	0	00: The ALERT# will be low active level mode. 01: The ALERT# will be high active level mode. 10: The ALERT# will indicate by 1Hz LED function. 11: The ALERT# will indicate by (400/800HZ) BEEP output.

8.6.2.3 Case Open Config. Register — Index 03h

Bit	Name	R/W	Default	Description
7-1	Reserved	R/W	0	Return 0 when read.
0	CASE_STS	R/W	0	Case open event status, write 1 to clear if case open event cleared.

Fintek Confidential Do Not Copy

8.6.2.4 PECI AMDSI Select Register — Index 0Ah

Bit	Name	R/W	Default	Description
7-6	Reserved	-	00	Reserved.
5	T1_IIR_EN	R/W	0	Set 1 to enable IIR for AMDSI/PECI reading. The reading will be more stable.
4	SST_EN	R/W	0	Set 1 to enable SST interface.
3-2	VTT_SEL	R/W	0	PECI (Vtt) voltage select. 00: Vtt is 1.23V 01: Vtt is 1.13V 10: Vtt is 1.00V 11: Vtt is 1.00V
1-0	MEAS_TYPE	R/W	00	CPU Temperature Measurement method. 00: with external diode. 01: with PECI interface. 10: with AMDSI interface. 11: reserved.

8.6.2.5 PECI CPU Select Register — Index 0Bh (MEAS_TYPE == 2'b01)

Bit	Name	R/W	Default	Description
7-4	CPU_SEL	R/W	0	Select the Intel CPU socket number. 0000: no CPU presented. PECI host will use Ping() command to find CPU address. 0001: CPU is in socket 0, i.e. PECI address is 0x30. 0010: CPU is in socket 0, i.e. PECI address is 0x31. 0100: CPU is in socket 0, i.e. PECI address is 0x32. 1000: CPU is in socket 0, i.e. PECI address is 0x33. Otherwise are reserved.
3-1	Reserved	-	0	Reserved.
0	DOMAIN1_EN	R/W	0	If the CPU selected is dual core. Set this register 1 to read the temperature of domain1.

8.6.2.6 AMDSI Version Register — Index 0Bh (MEAS_TYPE ==2'b10)

Bit	Name	R/W	Default	Description
7-0	AMDSI_VER	R	-	Return the AMDSI version.

8.6.2.7 TCC Temp. Register — Index 0Ch (MEAS_TYPE == 2'b01)

Bit	Name	R/W	Default	Description
7-0	TCC_TEMP	R/W	8'h55	TCC Activation Temperature. The absolute value of CPU temperature is calculated by the equation: CPU_TEMP = TCC_TEMP + PECI Reading. The range of this register is 0 ~ 255.

8.6.2.8 AMDSI Node ID Register — Index 0Ch (MEAS_TYPE ==2'b10)

Bit	Name	R/W	Default	Description
7-0	NODE_ID	R	-	Return the AMDSI node id.

8.6.2.9 SST Address Register — Index 0Dh

Bit	Name	R/W	Default	Description

Fintek Confidential
Do Not Copy

7-0	SST_ADDR	R/W	8'h4C	Address for SST interface. Programmable.

8.6.2.10 VID Divide Register — Index 0Eh

Bit	Name	R/W	Default	Description
7-6	VIN6_DIV	R/W	0	The value indicates the divisor of the voltage source. 00: voltage source is directly connected to VIN6. 01: voltage source is divided by 2 and connect to VIN6. 10: voltage source is divided by 4 and connect to VIN6. 11: voltage source is divided by 16 and connect to VIN6.
5-4	VIN5_DIV	R/W	0	The value indicates the divisor of the voltage source. 00: voltage source is directly connected to VIN5. 01: voltage source is divided by 2 and connect to VIN5. 10: voltage source is divided by 4 and connect to VIN5. 11: voltage source is divided by 16 and connect to VIN5.
3	PECI_SCALE_ADD	R/W	0	This register is used to indicate how to calculate the PECI reading with PECI_SCALE register. 0: The real value is the reading adds the value calculated by PECI_SCALE. 1: The real value is the reading adds the value calculated by PECI_SCALE.
2-0	PECI_SCALE	R/W	0	This register is used to control the PECI reading slope. See also PECI_SCALE_ADD register. 000: The real value is the PECI reading. 001: The real value is (1 ± 1/2) PECI reading. 010: The real value is (1 ± 1/4) PECI reading. 011: The real value is (1 ± 1/8) PECI reading. 100: The real value is (1 ± 1/16) PECI reading. 101: The real value is (1 ± 1/32) PECI reading. 110: The real value is (1 ± 1/64) PECI reading. 111: The real value is (1 ± 1/128) PECI reading.

8.6.2.11 Configuration Register — Index 0Fh

Bit	Name	R/W	Default	Description
7-6	VIN4_DIV	R/W	0	The value indicates the divisor of the voltage source. 00: voltage source is directly connected to VIN4. 01: voltage source is divided by 2 and connect to VIN4. 10: voltage source is divided by 4 and connect to VIN4. 11: voltage source is divided by 16 and connect to VIN4.
5-4	VIN3_DIV	R/W	0	The value indicates the divisor of the voltage source. 00: voltage source is directly connected to VIN3. 01: voltage source is divided by 2 and connect to VIN3. 10: voltage source is divided by 4 and connect to VIN3. 11: voltage source is divided by 16 and connect to VIN3.
3-2	VIN2_DIV	R/W	0	The value indicates the divisor of the voltage source. 00: voltage source is directly connected to VIN2. 01: voltage source is divided by 2 and connect to VIN2. 10: voltage source is divided by 4 and connect to VIN2. 11: voltage source is divided by 16 and connect to VIN2.
1-0	VIN1_DIV	R/W	0	The value indicates the divisor of the voltage source. 00: voltage source is directly connected to VIN1. 01: voltage source is divided by 2 and connect to VIN1. 10: voltage source is divided by 4 and connect to VIN1. 11: voltage source is divided by 16 and connect to VIN1.

Fintek Confidential
Do Not Copy

Voltage Setting

8.6.2.12 Voltage1 PME# Enable Register — Index 10h

Bit	Name	R/W	Default	Description
7-2	Reserved	--	0	Reserved
1	EN_V1_PME	R/W	0	A one enables the corresponding interrupt status bit for PME# interrupt. Set this bit 1 to enable PME# function for VIN1.
0	Reserved	--	0	Reserved

8.6.2.13 Voltage1 Interrupt Status Register — Index 11h

Bit	Name	R/W	Default	Description
7-2	Reserved	--	0	Reserved
1	V1_ EXC _STS	R/W	0	This bit is set when the VIN1 is over the high limit. Write 1 to clear this bit, write 0 will be ignored.
0	Reserved	--	0	Reserved

8.6.2.14 Voltage1 Exceeds Real Time Status Register 1 — Index 12h

Bit	Name	R/W	Default	Description
7-2	Reserved	--	0	Reserved
1	V1_EXC	RO	0	A one indicates VIN1 exceeds the high or low limit. A zero indicates VIN1 is in the safe region.
0	Reserved	--	0	Reserved

8.6.2.15 Voltage1 BEEP Enable Register — Index 13h

Bit	Name	R/W	Default	Description
7-2	Reserved	--	0	Reserved
1	EN_V1_BEEP	R/W	0	A one enables the corresponding interrupt status bit for BEEP output of VIN1.
0	Reserved	--	0	Reserved

8.6.2.16 Voltage reading and limit— Index 20h- 4Fh

Address	Attribute	Default Value	Description
20h	RO	--	VCC3V reading. The unit of reading is 8mV.
21h	RO	--	V1 (Vcore) reading. The unit of reading is 8mV.
22h	RO	--	V2 reading. The unit of reading is 8mV.

Fintek Confidential Do Not Copy!

23h	RO	--	V3 reading. The unit of reading is 8mV.
24h	RO	--	V4 reading. The unit of reading is 8mV.
25h	RO	--	V5 reading. The unit of reading is 8mV.
26h	RO	--	V6 reading. The unit of reading is 8mV.
27h	RO	--	VSB3V reading. The unit of reading is 8mV.
28h	RO	--	VBAT reading. The unit of reading is 8mV.
29~2Fh	RO	FF	Reserved
30~31h	RO	FF	Reserved
32h	R/W	FF	V1 High Limit setting register. The unit is 8mV.
33h	RO	FF	Reserved
34~4Fh	RO	FF	Reserved

Temperature Setting

8.6.2.17 Temperature PME# Enable Register — Index 60h

Bit	Name	R/W	Default	Description
7	EN_ T3_OVT_PME	R/W	0	If set this bit to 1, PME# signal will be issued when TEMP3 exceeds OVT limit setting.
6	EN_ T2_ OVT_PME	R/W	0	If set this bit to 1, PME# signal will be issued when TEMP2 exceeds OVT setting.
5	EN_ T1_ OVT_PME	R/W	0	If set this bit to 1, PME# signal will be issued when TEMP1 exceeds OVT setting.
4	Reserved	R/W	0	Reserved
3	EN_ T3_EXC_PME	R/W	0	If set this bit to 1, PME# signal will be issued when TEMP3 exceeds high limit setting.
2	EN_ T2_EXC_PME	R/W	0	If set this bit to 1, PME# signal will be issued when TEMP2 exceeds high limit setting.
1	EN_ T1_EXC_PME	R/W	0	If set this bit to 1, PME# signal will be issued when TEMP1 exceeds high limit setting.
0	Reserved	R/W	0	Reserved

8.6.2.18 Temperature Interrupt Status Register — Index 61h

Bit	Name	R/W	Default	Description

Fintek Confidential Do Not Copy!

7	T3_OVT_STS	R/W	0	A one indicates TEMP3 temperature sensor has exceeded OVT limit or below the "OVT limit –hysteresis". Write 1 to clear this bit, write 0 will be ignored.
6	T2_OVT _STS	R/W	0	A one indicates TEMP2 temperature sensor has exceeded OVT limit or below the "OVT limit –hysteresis". Write 1 to clear this bit, write 0 will be ignored.
5	T1_OVT _STS	R/W	0	A one indicates TEMP1 temperature sensor has exceeded OVT limit or below the "OVT limit –hysteresis". Write 1 to clear this bit, write 0 will be ignored.
4	Reserved	R/W	0	Reserved
3	T3_EXC _STS	R/W	0	A one indicates TEMP3 temperature sensor has exceeded high limit or below the "high limit –hysteresis". Write 1 to clear this bit, write 0 will be ignored.
2	T2_EXC _STS	R/W	0	A one indicates TEMP2 temperature sensor has exceeded high limit or below the "high limit –hysteresis" limit. Write 1 to clear this bit, write 0 will be ignored.
1	T1_EXC _STS	R/W	0	A one indicates TEMP1 temperature sensor has exceeded high limit or below the "high limit –hysteresis" limit. Write 1 to clear this bit, write 0 will be ignored.
0	Reserved	R/W	0	Reserved

Fintek Confidential
Do Not Copy

8.6.2.19 Temperature Real Time Status Register — Index 62h

Bit	Name	R/W	Default	Description
7	T3_OVT	R/W	0	Set when the TEMP3 exceeds the OVT limit. Clear when the TEMP3 is below the "OVT limit –hysteresis" temperature.
6	T2_OVT	R/W	0	Set when the TEMP2 exceeds the OVT limit. Clear when the TEMP2 is below the "OVT limit –hysteresis" temperature.
5	T1_OVT	R/W	0	Set when the TEMP1 exceeds the OVT limit. Clear when the TEMP1 is below the "OVT limit –hysteresis" temperature.
4	Reserved	R/W	0	Reserved
3	T3_EXC	R/W	0	Set when the TEMP3 exceeds the high limit. Clear when the TEMP3 is below the "high limit –hysteresis" temperature.
2	T2_EXC	R/W	0	Set when the TEMP2 exceeds the high limit. Clear when the TEMP2 is below the "high limit –hysteresis" temperature.
1	T1_EXC	R/W	0	Set when the TEMP1 exceeds the high limit. Clear when the TEMP1 is below the "high limit –hysteresis" temperature.

0	Reserved	R/W	0	Reserved

8.6.2.20 Temperature BEEP Enable Register — Index 63h

Bit	Name	R/W	Default	Description
7	EN_ T3_OVT_BEEP	R/W	0	If set this bit to 1, BEEP signal will be issued when TEMP3 exceeds OVT limit setting.
6	EN_ T2_ OVT_BEEP	R/W	0	If set this bit to 1, BEEP signal will be issued when TEMP2 exceeds OVT limit setting.
5	EN_ T1_ OVT_BEEP	R/W	0	If set this bit to 1, BEEP signal will be issued when TEMP1 exceeds OVT limit setting.
4	Reserved	R/W	0	Reserved
3	EN_ T3_EXC_BEEP	R/W	0	If set this bit to 1, BEEP signal will be issued when TEMP3 exceeds high limit setting.
2	EN_ T2_EXC_BEEP	R/W	0	If set this bit to 1, BEEP signal will be issued when TEMP2 exceeds high limit setting.
1	EN_ T1_EXC_BEEP	R/W	0	If set this bit to 1, BEEP signal will be issued when TEMP1 exceeds high limit setting.
0	Reserved	R/W	0	Reserved

8.6.2.21 OVT Output Enable Register 1 — Index 66h

Bit	Name	R/W	Default	Description
7	EN_T3_ALERT	R	0	Enable temperature 3 alert event (asserted when temperature over high limit)
6	EN_T2_ALERT	R	0	Enable temperature 2 alert event (asserted when temperature over high limit)
5	EN_T1_ALERT	R	0	Enable temperature 1 alert event (asserted when temperature over high limit)
4	Reserved	R	0	Reserved
3	EN_T3_OVT	R/W	0	Enable over temperature (OVT) mechanism of temperature3.
2	EN_T2_OVT	R/W	0	Enable over temperature (OVT) mechanism of temperature2.
1	EN_T1_OVT	R/W	1	Enable over temperature (OVT) mechanism of temperature1.
0	Reserved	R	0h	Reserved.

8.6.2.22 Temperature Sensor Type Register — Index 6Bh

Bit	Name	R/W	Default	Description
7-4	Reserved	RO	0	--
3	T3_MODE	R/W	1	0: TEMP3 is connected to a thermistor 1: TEMP3 is connected to a BJT.(default)

Fintek Confidential
Do Not Copy

2	T2_MODE	R/W	1	0: TEMP2 is connected to a thermistor. 1: TEMP2 is connected to a BJT. (default)
1	T1_MODE	R/W	1	0: TEMP1 is connected to a thermistor 1: TEMP1 is connected to a BJT.(default)
0	Reserved	R	0h	--

8.6.2.23 TEMP1 Limit Hystersis Select Register -- Index 6Ch

Bit	Name	R/W	Default	Description
7-4	TEMP1_HYS	R/W	4h	Limit hysteresis. (0~15 degree C) Temperature and below the (boundary – hysteresis).
3-0	Reserved	R	0h	--

8.6.2.24 TEMP2 and TEMP3 Limit Hystersis Select Register -- Index 6Dh

Bit	Name	R/W	Default	Description
7-4	TEMP3_HYS	R/W	2h	Limit hysteresis. (0~15 degree C) Temperature and below the (boundary – hysteresis).
3-0	TEMP2_HYS	R/W	4h	Limit hysteresis. (0~15 degree C) Temperature and below the (boundary – hysteresis).

8.6.2.25 DIODE OPEN Status Register -- Index 6Fh

Bit	Name	R/W	Default	Description
7-4	Reserved	RO	0h	Reserved
3	T3_DIODE_OPEN	RO	0h	External diode 3 is open
2	T2_DIODE_OPEN	RO	0h	External diode 2 is open
1	T1_DIODE_OPEN	RO	0h	This register indicates the abnormality of temperature 1 measurement. When AMDSI interface is enabled, it indicates the error of not receiving ACK bit when read TCON command is asserted. When PECI interface is enabled, it indicates an error code is received from PECI slave. When external diode is used, it indicates the BJT is open or short.
0	Reserved	R	0h	--

Temperature — Index 70h- 8Fh

Address	Attribute	Default Value	Description
70h	Reserved	FFh	Reserved
71h	Reserved	FFh	Reserved

Fintek Confidential
Do Not Copy

72h	RO	--	Temperature 1 reading. The unit of reading is 1°C.At the moment of reading this register.
73h	RO	--	Reserved
74h	RO	--	Temperature 2 reading. The unit of reading is 1°C.At the moment of reading this register.
75h	RO	--	Reserved
76h	RO	--	Temperature 3 reading. The unit of reading is 1°C.At the moment of reading this register.
77-7Bh	RO	--	Reserved
7C-7Fh	RO	FFh	Reserved
80h	Reserved	FFh	Reserved
81h	Reserved	FFh	Reserved
82h	R/W	64h	Temperature sensor 1 OVT limit. The unit is 1°C.
83h	R/W	55h	Temperature sensor 1 high limit. The unit is 1°C.
84h	R/W	64h	Temperature sensor 2 OVT limit. The unit is 1°C.
85h	R/W	55h	Temperature sensor 2 high limit. The unit is 1°C.
86h	R/W	55h	Temperature sensor 3 OVT limit. The unit is 1°C.
87h	R/W	46h	Temperature sensor 3 high limit. The unit is 1°C.
88-8Bh	RO	--	Reserved
8C~8Dh	RO	FFH	Reserved

Fintek Confidential
Do Not Copy!

8.6.2.26 Temperature Filter Select Register -- Index 8Eh

Bit	Name	R/W	Default	Description
7-6	IIR-QUEUR3	R/W	0h	The queue time for second filter to quickly update values. 00: disable. 01: 16 times. 10: 32 times. (default) 11: 48 times.

5-4	IIR-QUEUR2	R/W	0h	The queue time for second filter to quickly update values. 00: disable. 01: 16 times. 10: 32 times. (default) 11: 48 times.
3-2	IIR-QUEUR1	R/W	0h	The queue time for second filter to quickly update values. 00: disable. 01: 16 times. 10: 32 times. (default) 11: 48 times.
0	Reserved	R	0h	--

Fan Control Setting

8.6.2.27 FAN PME# Enable Register — Index 90h

Bit	Name	R/W	Default	Description
7-4	Reserved	RO	0h	Reserved
3	EN_FAN4_PME	R/W	0h	A one enables the corresponding interrupt status bit for PME# interrupt. Set this bit 1 to enable PME# function for Fan4.
2	EN_FAN3_PME	R/W	0h	A one enables the corresponding interrupt status bit for PME# interrupt.. Set this bit 1 to enable PME# function for Fan3.
1	EN_FAN2_PME	R/W	0h	A one enables the corresponding interrupt status bit for PME# interrupt. Set this bit 1 to enable PME# function for Fan2.
0	EN_FAN1_PME	R/W	0h	A one enables the corresponding interrupt status bit for PME# interrupt. Set this bit 1 to enable PME# function for Fan1.

8.6.2.28 FAN Interrupt Status Register — Index 91h

Bit	Name	R/W	Default	Description
7-4	Reserved	RO	0	Reserved
3	FAN4_STS	R/W	--	This bit is set when the fan4 count exceeds the count limit. Write 1 to clear this bit, write 0 will be ignored.
2	FAN3_STS	R/W	--	This bit is set when the fan3 count exceeds the count limit. Write 1 to clear this bit, write 0 will be ignored.
1	FAN2_STS	R/W	--	This bit is set when the fan2 count exceeds the count limit. Write 1 to clear this bit, write 0 will be ignored.

Fintek Confidential
Do Not Copy!

0	FAN1_STS	R/W	--	This bit is set when the fan1 count exceeds the count limit. Write 1 to clear this bit, write 0 will be ignored.

8.6.2.29 FAN Real Time Status Register — Index 92h

Bit	Name	R/W	Default	Description
7-4	Reserved	--	0	Reserved
3	FAN4_EXC	RO	--	This bit set to high mean that fan4 count can't meet expect count over than SMI time(CR9F) or when duty not zero but fan stop over then 3 sec.
2	FAN3_EXC	RO	--	This bit set to high mean that fan3 count can't meet expect count over than SMI time(CR9F) or when duty not zero but fan stop over then 3 sec.
1	FAN2_EXC	RO	--	This bit set to high mean that fan2 count can't meet expect count over than SMI time(CR9F) or when duty not zero but fan stop over then 3 sec.
0	FAN1_EXC	RO	--	This bit set to high mean that fan1 count can't meet expect count over than SMI time(CR9F) or when duty not zero but fan stop over then 3 sec.

8.6.2.30 FAN BEEP# Enable Register — Index 93h

Bit	Name	R/W	Default	Description
7	FULL_WITH_T3_EN	R/W	0	Set one will enable FAN to force full speed when T3 over high limit.
6	FULL_WITH_T2_EN	R/W	0	Set one will enable FAN to force full speed when T2 over high limit.
5	FULL_WITH_T1_EN	R/W	0	Set one will enable FAN to force full speed when T1 over high limit.
4	Reserved	R/W	0	Reserved for local temperature.
3	EN_FAN4_BEEP	R/W	0	A one enables the corresponding interrupt status bit for BEEP.
2	EN_FAN3_ BEEP	R/W	0	A one enables the corresponding interrupt status bit for BEEP.
1	EN_FAN2_ BEEP	R/W	0	A one enables the corresponding interrupt status bit for BEEP.
0	EN_FAN1_ BEEP	R/W	0	A one enables the corresponding interrupt status bit for BEEP.

8.6.2.31 Fan Type Select Register -- Index 94h

Bit	Name	R/W	Default	Description
7-6	FAN4_TYPE	R/W	2'b0S	00: Output PWM mode (pushpull) to control fans. 01: Use linear fan application circuit to control fan speed by fan's power terminal . 10: Output PWM mode (open drain) to control Intel 4-wire fans. 11: Reserved.

Fintek Confidential Do Not Copy!

5-4	FAN3_TYPE	R/W	2'b 0S	00: Output PWM mode (pushpull) to control fans. 01: Use linear fan application circuit to control fan speed by fan's power terminal . 10: Output PWM mode (open drain) to control Intel 4-wire fans. 11: Reserved.
3-2	FAN2_TYPE	R/W	2'b 0S	00: Output PWM mode (pushpull) to control fans. 01: Use linear fan application circuit to control fan speed by fan's power terminal . 10: Output PWM mode (open drain) to control Intel 4-wire fans. 11: Reserved.
1-0	FAN1_TYPE	R/W	2'b 0S	00: Output PWM mode (push pull) to control fans. 01: Use linear fan application circuit to control fan speed by fan's power terminal . 10: Output PWM mode (open drain) to control Intel 4-wire fans. 11: Reserved.

S: Register default values are decided by trapping.

8.6.2.32 Fan mode Select Register -- Index 96h

Bit	Name	R/W	Default	Description
7-6	FAN4_MODE	R/W	1h	00: Auto fan speed control, fan speed will follow different temperature by different **RPM** that define in 0xD6-0xDE. 01: Auto fan speed control, fan speed will follow different temperature by different **duty cycle** that define in 0xD6-0xDE. 10: Manual mode fan control, user can write expect **RPM** count to 0xD2-0xD3, and F71882 will auto control duty cycle (PWM fan type) or voltage(linear fan type) to control fan speed. 11: Manual mode fan control, user can write expect **duty cycle** (PWM fan type) or voltage(linear fan type) to 0xD3, and F71882 will output this value duty or voltage to control fan speed.

Fintek Confidential
Do Not Copy

5-4	FAN3_MODE	R/W	1h	00: Auto fan speed control, fan speed will follow different temperature by different **RPM** that define in 0xC6-0xCE. 01: Auto fan speed control, fan speed will follow different temperature by different **duty cycle** that define in 0xC6-0xCE. 10: Manual mode fan control, user can write expect **RPM** count to 0xC2-0xC3, and F71882 will auto control duty cycle (PWM fan type) or voltage(linear fan type) to control fan speed. 11: Manual mode fan control, user can write expect **duty cycle** (PWM fan type) or voltage(linear fan type) to 0xC3, and F71882 will output this value duty or voltage to control fan speed.
3-2	FAN2_MODE	R/W	1h	00: Auto fan speed control, fan speed will follow different temperature by different **RPM** that define in 0xB6-0xBE. 01: Auto fan speed control, fan speed will follow different temperature by different **duty cycle** (voltage) that define in 0xB6-0xBE. 10: Manual mode fan control, user can write expect **RPM** count to 0xB2-0xB3, and F71882 will auto control duty cycle (PWM fan type) or voltage (linear fan type) to control fan speed. 11: Manual mode fan control, user can write expect **duty cycle** (PWM fan type) or voltage (linear fan type) to 0xB3, and F71882 will output this value duty or voltage to control fan speed.
1-0	FAN1_MODE	R/W	1h	00: Auto fan speed control, fan speed will follow different temperature by different **RPM** that define in 0xA6-0xAE. 01: Auto fan speed control, fan speed will follow different temperature by different **duty cycle** that define in 0xA6-0xAE. 10: Manual mode fan control, user can write expect **RPM** count to 0xA2-0xA3, and F71882 will auto control duty cycle (PWM fan type) or voltage(linear fan type) to control fan speed. 11: Manual mode fan control, user can write expect **duty cycle** (PWM fan type) or voltage(linear fan type) to 0xA3, and F71882 will output this value duty or voltage to control fan speed.

Fintek Confidential
Do Not Copy

8.6.2.33 Auto Fan1 and Fan2 Boundary Hystersis Select Register -- Index 98h

Bit	Name	R/W	Default	Description
7-4	FAN2_HYS	R/W	4h	0000: Boundary hysteresis. (0~15 degree C) Segment will change when the temperature over the boundary temperature and below the (boundary – hysteresis).

3-0	FAN1_HYS	R/W	4h	0000: Boundary hysteresis. (0~15 degree C) Segment will change when the temperature over the boundary temperature and below the (boundary – hysteresis).

8.6.2.34 Auto Fan3 and Fan4 Boundary Hystersis Select Register -- Index 99h

Bit	Name	R/W	Default	Description
7-4	FAN4_HYS	R/W	2h	0000: Boundary hysteresis. (0~15 degree C) Segment will change when the temperature over the boundary temperature and below the (boundary – hysteresis).
3-0	FAN3_HYS	R/W	2h	0000: Boundary hysteresis. (0~15 degree C) Segment will change when the temperature over the boundary temperature and below the (boundary – hysteresis).

8.6.2.35 Auto Fan Duty Update Rate Select Register -- Index 9Bh

Bit	Name	R/W	Default	Description
7-6	FAN4_RATE_SEL	R/W	1h	Fan4 duty update rate: 00: 2Hz 01: 5Hz (default) 10: 10Hz 11: 20Hz
5-4	FAN3_RATE_SEL	R/W	1h	Fan3 duty update rate: 00: 2Hz 01: 5Hz (default) 10: 10Hz 11: 20Hz
3-2	FAN2_RATE_SEL	R/W	1h	Fan2 duty update rate: 00: 2Hz 01: 5Hz (default) 10: 10Hz 11: 20Hz
1-0	FAN1_RATE_SEL	R/W	1h	Fan1 duty update rate: 00: 2Hz 01: 5Hz (default) 10: 10Hz 11: 20Hz

Fintek Confidential
Do Not Copy!

8.6.2.36 FAN1 and FAN2 START UP DUTY-CYCLE/VOLTAGE — Index 9Ch

Bit	Name	R/W	Default	Description
7-4	FAN2_STOP_DUTY	R/W	5h	When fan start, the FAN_CTRL2 will increase duty-cycle from 0 to this (value x 8) directly. And if fan speed is down, the FAN_CTRL 2 will decrease duty-cycle to 0 when the PWM duty cycle is less than this (value x 4).

3-0	FAN1_STOP_DUTY	R/W	5h	When fan start, the FAN_CTRL 1 will increase duty-cycle from 0 to this (value x 8 directly. And if fan speed is down, the FAN_CTRL 1 will decrease duty-cycle to 0 when the PWM duty cycle is less than this (value x 4).

8.6.2.37 FAN3 and FAN4 START UP DUTY-CYCLE/VOLTAGE — Index 9Dh

Bit	Name	R/W	Default	Description
7-4	FAN4_STOP_DUTY	R/W	5h	When fan start, the FAN_CTRL 4 will increase duty-cycle from 0 to this (value x 8) directly. And if fan speed is down, the FAN_CTRL 4 will decrease duty-cycle to 0 when the PWM duty cycle is less than this (value x 4).
3-0	FAN3_STOP_DUTY	R/W	5h	When fan start, the FAN_CTRL 3 will increase duty-cycle from 0 to this (value x 8 directly. And if fan speed is down, the FAN_CTRL 3 will decrease duty-cycle to 0 when the PWM duty cycle is less than this (value x 4).

8.6.2.38 Fan Fault Time Register -- Index 9Fh

Bit	Name	R/W	Default	Description
7-5	Reserved	--	--	Reservd
4	FULL_DUTY_SEL	R/W	--	0: the full duty is 100%. 1: the full duty is 60% (default). This register is power on trap by DTR1#.
3-0	F_FAULT_TIME	R/W	Ah	This register determines the time of fan fault. The condition to cause fan fault event is: When PWM_Duty reaches FFh, if the fan speed count can't reach the fan expect count in time. The unit of this register is 1 second. The default value is 11 seconds. (Set to 0 , means 1 seconds. ; Set to 1, means 2 seconds. Set to 2, means 3 seconds. ….) Another condition to cause fan fault event is fan stop and the PWM duty is greater than the minimum duty programmed by the register index 9C-9Dh.

Fintek Confidential
Do Not Copy!

Fan1 Index A0h- AFh

Address	Attribute	Default Value	Description

A0h	RO	8'h0f	FAN1 count reading (MSB). At the moment of reading this register, the LSB will be latched. This will prevent from data updating when reading. To read the fan count correctly, read MSB first and followed read the LSB.
A1h	RO	8'hff	FAN1 count reading (LSB).
A2h	R/W	8'h00	**RPM mode(CR96 bit0=0):** FAN1 expect speed count value (MSB), in auto fan mode (CR96 bit1➔0) this register is auto updated by hardware. **Duty mode(CR96 bit0=1):** This byte is reserved byte.
A3h	R/W	8'h01	**RPM mode(CR96 bit0=0):** FAN1 expect speed count value (LSB) or expect PWM duty, in auto fan mode this register is auto updated by hardware and read only. **Duty mode(CR96 bit0=1):** The Value programming in this byte is duty value. In auto fan mode(CR96 bit1➔0) this register is updated by hardware. Ex: 5➔ 5*100/255 % 255 ➔ 100%
A4h	R/W	8'h03	FAN1 full speed count reading (MSB). At the moment of reading this register, the LSB will be latched. This will prevent from data updating when reading. To read the fan count correctly, read MSB first and followed read the LSB.
A5h	R/W	8'hff	FAN1 full speed count reading (LSB).

8.6.2.39 VT1 BOUNDARY 1 TEMPERATURE – Index A6h

Bit	Name	R/W	Default	Description
7	Reserved	RO	0	Return 0 when read.
6-0	BOUND1TMP1	R/W	3Ch ($60^{o}C$)	The 1st BOUNDARY temperature for VT1 in temperature mode. When VT1 temperature is **exceed** this boundary, FAN1 expect value will load from segment **1** register (index AA)h. When VT1 temperature is **below** this boundary – hysteresis, FAN1 expect value will load from segment **2** register (index AAh).

8.6.2.40 VT1 BOUNDARY 2 TEMPERATURE – Index A7

Bit	Name	R/W	Default	Description
7	Reserved	RO	0	Return 0 when read.

Fintek Confidential
Do Not Copy

6-0	BOUND2TMP1	R/W	32 (50°C)	The 2st BOUNDARY temperature for VT1 in temperature mode. When VT1 temperature is **exceed** this boundary, FAN1 expect value will load from segment **2** register (index AB)h. When VT1 temperature is **below** this boundary – hysteresis, FAN1 expect value will load from segment **3** register (index ABh).

8.6.2.41 VT1 BOUNDARY 3 TEMPERATURE – Index A8h

Bit	Name	R/W	Default	Description
7	Reserved	RO	0	Return 0 when read.
6-0	BOUND3TMP1	R/W	28h (40°C)	The 3st BOUNDARY temperature for VT1 in temperature mode. When VT1 temperature is **exceed** this boundary, FAN1 expect value will load from segment **3** register (index AC)h. When VT1 temperature is **below** this boundary – hysteresis, FAN1 expect value will load from segment **4** register (index ACh).

8.6.2.42 VT1 BOUNDARY 4 TEMPERATURE – Index A9

Bit	Name	R/W	Default	Description
7	Reserved	RO	0	Return 0 when read.
6-0	BOUND4TMP1	R/W	1Eh (30°C)	The 4st BOUNDARY temperature for VT1 in temperature mode. When VT1 temperature is **exceed** this boundary, FAN1 expect value will load from segment **4** register (index ADh). When VT1 temperature is **below** this boundary – hysteresis, FAN1 expect value will load from segment **5** register (index ADh).

8.6.2.43 FAN1 SEGMENT 1 SPEED COUNT – Index AAh

Bit	Name	R/W	Default	Description
7-0	SEC1SPEED1	R/W	FFh (100%)	The meaning of this register is depending on the FAN1_MODE(CR96) **2'b00:** The value that set in this byte is the relative expect fan speed % of the full speed in this temperature section. Ex: 100%:full speed: User must set this register to 0. 60% full speed: (100-60)*32/60, so user must program 21 to this reg. X% full speed: The value programming in this byte is ➔ (100-X)*32/X **2'b01:** The value that set in this byte is mean the expect PWM duty-cycle in this temperature section.

Fintek Confidential Do Not Copy

8.6.2.44 FAN1 SEGMENT 2 SPEED COUNT – Index ABh

Bit	Name	R/W	Default	Description
7-0	SEC2SPEED1	R/W	D9h (85%)	The meaning of this register is depending on the FAN1_MODE(CR96) **2'b00:** The value that set in this byte is the relative expect fan speed % of the full speed in this temperature section. **2'b01:** The value that set in this byte is mean the expect PWM duty-cycle in this temperature section.

8.6.2.45 FAN1 SEGMENT 3 SPEED COUNT – Index ACh

Bit	Name	R/W	Default	Description
7-0	SEC3SPEED1	R/W	B2h (70%)	The meaning of this register is depending on the FAN1_MODE(CR96) **2'b00:** The value that set in this byte is the relative expect fan speed % of the full speed in this temperature section. **2'b01:** The value that set in this byte is mean the expect PWM duty-cycle in this temperature section.

8.6.2.46 FAN1 SEGMENT 4 SPEED COUNT – Index ADh

Bit	Name	R/W	Default	Description
7-0	SEC4SPEED1	R/W	99h (60%)	The meaning of this register is depending on the FAN1_MODE(CR96) **2'b00:** The value that set in this byte is the relative expect fan speed % of the full speed in this temperature section. **2'b01:** The value that set in this byte is mean the expect PWM duty-cycle in this temperature section.

8.6.2.47 FAN1 SEGMENT 5 SPEED COUNT – Index AEh

Bit	Name	R/W	Default	Description
7-0	SEC5SPEED1	R/W	80h (50%)	The meaning of this register is depending on the FAN1_MODE(CR96) **2'b00:** The value that set in this byte is the relative expect fan speed % of the full speed in this temperature section. **2'b01:** The value that set in this byte is mean the expect PWM duty-cycle in this temperature section.

8.6.2.48 FAN1 Temperature Mapping Select – Index AFh

Bit	Name	R/W	Default	Description
7-6	Reserved	--	0	Reserved
5	FAN1_UP_T_EN	R/W	0	Set 1 to force FAN1 to full speed if any temperature over its high limit.

Fintek Confidential Do Not Copy

4	FAN1_INTERPOLATION_EN	R/W	0	Set 1 will enable the interpolation of the fan expect table.
3	FAN1_JUMP_HIGH_EN	R/W	0	This register controls the FAN1 duty movement when temperature over highest boundary. 0: The FAN1 duty will increases with the slope selected by FAN1_RATE_SEL register. 1: The FAN1 duty will directly jumps to the value of SEC1SPEED1 register. This bit only activates in duty mode.
2	FAN1_JUMP_LOW_EN	R/W	0	This register controls the FAN1 duty movement when temperature under (highest boundary – hysteresis). 0: The FAN1 duty will decreases with the slope selected by FAN1_RATE_SEL register. 1: The FAN1 duty will directly jumps to the value of SEC2SPEED1 register. This bit only activates in duty mode.
1-0	Fan1_temp_sel	R/W	1	0: reserved. 1: fan1 follow temperature 1. 2: fan1 follow temperature 2. 3: fan1 follow temperature 3.

Fan2 Index B0h- BFh

Address	Attribute	Default Value	Description
B0h	RO	8'h0f	FAN2 count reading (MSB). At the moment of reading this register, the LSB will be latched. This will prevent from data updating when reading. To read the fan count correctly, read MSB first and followed read the LSB.
B1h	RO	8'hff	FAN2 count reading (LSB).
B2h	R/W	8'h00	**RPM mode(CR96 bit2=0):** FAN2 expect speed count value (MSB), in auto fan mode(CR96 bit3➔0) this register is auto updated by hardware. **Duty mode(CR96 bit2=1):** This byte is reserved byte.
B3h	R/W	8'h01	**RPM mode(CR96 bit2=0):** FAN2 expect speed count value (LSB) or expect PWM duty , in auto fan mode this register is auto updated by hardware and read only. **Duty mode(CR96 bit2=1):** The Value programming in this byte is duty value. In auto fan mode(CR96 bit3➔0) this register is updated by hardware. Ex: 5➔ 5*100/255 % 255 ➔ 100%

Fintek Confidential
Do Not Copy!

B4h	R/W	8'h03	FAN2 full speed count reading (MSB). At the moment of reading this register, the LSB will be latched. This will prevent from data updating when reading. To read the fan count correctly, read MSB first and followed read the LSB.
B5h	R/W	8'hff	FAN2 full speed count reading (LSB).

8.6.2.49 VT2 BOUNDARY 1 TEMPERATURE – Index B6h

Bit	Name	R/W	Default	Description
7	Reserved	RO	0	Return 0 when read.
6-0	BOUND1TMP2	R/W	3Ch (60°C)	The 1st BOUNDARY temperature for VT2 in temperature mode. When VT2 temperature is **exceed** this boundary, FAN2 expect value will load from segment **1** register (index BA)h. When VT2 temperature is **below** this boundary – hysteresis, FAN2 expect value will load from segment **2** register (index BAh).

8.6.2.50 VT2 BOUNDARY 2 TEMPERATURE – Index B7

Bit	Name	R/W	Default	Description
7	Reserved	RO	0	Return 0 when read.
6-0	BOUND2TMP2	R/W	32 (50°C)	The 2st BOUNDARY temperature for VT2 in temperature mode. When VT2 temperature is **exceed** this boundary, FAN2 expect value will load from segment **2** register (index BB)h. When VT2 temperature is **below** this boundary – hysteresis, FAN2 expect value will load from segment **3** register (index BBh).

8.6.2.51 VT2 BOUNDARY 3 TEMPERATURE – Index B8h

Bit	Name	R/W	Default	Description
7	Reserved	RO	0	Return 0 when read.
6-0	BOUND3TMP2	R/W	28h (40°C)	The 3st BOUNDARY temperature for VT2 in temperature mode. When VT2 temperature is **exceed** this boundary, FAN2 expect value will load from segment **3** register (index BC)h. When VT2 temperature is **below** this boundary – hysteresis, FAN2 expect value will load from segment **4** register (index BCh).

8.6.2.52 VT2 BOUNDARY 4 TEMPERATURE – Index B9

Bit	Name	R/W	Default	Description
7	Reserved	RO	0	Return 0 when read.

Fintek Confidential
Do Not Copy

6-0	BOUND4TMP2	R/W	1Eh (30°C)	The 4st BOUNDARY temperature for VT2 in temperature mode. When VT2 temperature is **exceed** this boundary, FAN2 expect value will load from segment **4** register (index BDh). When VT2 temperature is **below** this boundary – hysteresis, FAN2 expect value will load from segment **5** register (index BDh).

8.6.2.53 FAN2 SEGMENT 1 SPEED COUNT – Index BAh

Bit	Name	R/W	Default	Description
7-0	SEC1SPEED2	R/W	FFh (100%)	The meaning of this register is depending on the FAN2_MODE(CR96) **2'b00:** The value that set in this byte is the relative expect fan speed % of the full speed in this temperature section. Ex: 100%:full speed: User must set this register to 0. 60% full speed: (100-60)*32/60, so user must program 21 to this reg. X% full speed: The value programming in this byte is ➔ (100-X)*32/X **2'b01:** The value that set in this byte is mean the expect PWM duty-cycle in this temperature section.

8.6.2.54 FAN2 SEGMENT 2 SPEED COUNT – Index BBh

Bit	Name	R/W	Default	Description
7-0	SEC2SPEED2	R/W	D9h (85%)	The meaning of this register is depending on the FAN2_MODE(CR96) **2'b00:** The value that set in this byte is the relative expect fan speed % of the full speed in this temperature section. **2'b01:** The value that set in this byte is mean the expect PWM duty-cycle in this temperature section.

8.6.2.55 FAN2 SEGMENT 3 SPEED COUNT – Index BCh

Bit	Name	R/W	Default	Description
7-0	SEC3SPEED2	R/W	B2h (70%)	The meaning of this register is depending on the FAN2_MODE(CR96) **2'b00:** The value that set in this byte is the relative expect fan speed % of the full speed in this temperature section. **2'b01:** The value that set in this byte is mean the expect PWM duty-cycle in this temperature section.

8.6.2.56 FAN2 SEGMENT 4 SPEED COUNT – Index BDh

Bit	Name	R/W	Default	Description

Fintek Confidential
Do not copy!

7-0	SEC4SPEED2	R/W	99h (60%)	The meaning of this register is depending on the FAN2_MODE(CR96) **2'b00:** The value that set in this byte is the relative expect fan speed % of the full speed in this temperature section. **2'b01:** The value that set in this byte is mean the expect PWM duty-cycle in this temperature section.

8.6.2.57 FAN2 SEGMENT 5 SPEED COUNT – Index BEh

Bit	Name	R/W	Default	Description
7-0	SEC5SPEED2	R/W	80h (50%)	The meaning of this register is depending on the FAN2_MODE(CR96) **2'b00:** The value that set in this byte is the relative expect fan speed % of the full speed in this temperature section. **2'b01:** The value that set in this byte is mean the expect PWM duty-cycle in this temperature section.

8.6.2.58 FAN2 Temperature Mapping Select – Index BFh

Bit	Name	R/W	Default	Description
7-6	Reserved	--	0	Reserved
5	FAN2_UP_T_EN	R/W	0	Set 1 to force FAN2 to full speed if any temperature over its high limit.
4	FAN2_INTERPOLATION_EN	R/W	0	Set 1 will enable the interpolation of the fan expect table.
3	FAN2_JUMP_HIGH_EN	R/W	0	This register controls the FAN2 duty movement when temperature over highest boundary. 0: The FAN2 duty will increases with the slope selected by FAN2_RATE_SEL register. 1: The FAN2 duty will directly jumps to the value of SEC1SPEED2 register. This bit only activates in duty mode.
2	FAN2_JUMP_LOW_EN	R/W	0	This register controls the FAN2 duty movement when temperature under (highest boundary – hysteresis). 0: The FAN2 duty will decreases with the slope selected by FAN2_RATE_SEL register. 1: The FAN2 duty will directly jumps to the value of SEC2SPEED2 register. This bit only activates in duty mode.
1-0	Fan2_temp_sel	R/W	2	0: reserved. 1: fan2 follow temperature 1. 2: fan2 follow temperature 2. 3: fan2 follow temperature 3.

Fintek Confidential Do not copy

Fan3 Index C0h- CFh

Address	Attribute	Default Value	Description
C0h	RO	8'h0F	FAN3 count reading (MSB). At the moment of reading this register, the LSB will be latched. This will prevent from data updating when reading. To read the fan count correctly, read MSB first and followed read the LSB.
C1h	RO	8'hff	FAN3 count reading (LSB).
C2h	R/W	8'h00	**RPM mode(CR96 bit4=0):** FAN3 expect speed count value (MSB), in auto fan mode(CR96 bit5➔0) this register is auto updated by hardware. **Duty mode(CR96 bit4=1):** This byte is reserved byte.
C3h	R/W	8'h01	**RPM mode(CR96 bit4=0):** FAN3 expect speed count value (LSB) or expect PWM duty , in auto fan mode this register is auto updated by hardware and read only. **Duty mode(CR96 bit4=1):** The Value programming in this byte is duty value. In auto fan mode(CR96 bit5➔0) this register is updated by hardware. Ex: 5➔ 5*100/255 % 255 ➔ 100%
C4h	R/W	8'h03	FAN3 full speed count reading (MSB). At the moment of reading this register, the LSB will be latched. This will prevent from data updating when reading. To read the fan count correctly, read MSB first and followed read the LSB.
C5h	R/W	8'hff	FAN3 full speed count reading (LSB).

Fintek Confidential
Do Not Copy

8.6.2.59 VT3 BOUNDARY 1 TEMPERATURE – Index C6h

Bit	Name	R/W	Default	Description
7	Reserved	RO	0	Return 0 when read.
6-0	BOUND1TMP3	R/W	3Ch (60°C)	The 1st BOUNDARY temperature for VT3 in temperature mode. When VT3 temperature is **exceed** this boundary, FAN3 expect value will load from segment **1** register (index CA)h. When VT3 temperature is **below** this boundary – hysteresis, FAN3 expect value will load from segment **2** register (index CAh).

8.6.2.60 VT3 BOUNDARY 2 TEMPERATURE – Index C7

Bit	Name	R/W	Default	Description
7	Reserved	RO	0	Return 0 when read.

6-0	BOUND2TMP3	R/W	32 (50°C)	The 2st BOUNDARY temperature for VT3 in temperature mode. When VT3 temperature is **exceed** this boundary, FAN3 expect value will load from segment **2** register (index CB)h. When VT3 temperature is **below** this boundary – hysteresis, FAN3 expect value will load from segment **3** register (index CBh).

8.6.2.61 VT3 BOUNDARY 3 TEMPERATURE – Index C8h

Bit	Name	R/W	Default	Description
7	Reserved	RO	0	Return 0 when read.
6-0	BOUND3TMP3	R/W	28h (40°C)	The 3st BOUNDARY temperature for VT3 in temperature mode. When VT3 temperature is **exceed** this boundary, FAN3 expect value will load from segment **3** register (index CC)h. When VT3 temperature is **below** this boundary – hysteresis, FAN3 expect value will load from segment **4** register (index CCh).

8.6.2.62 VT3 BOUNDARY 4 TEMPERATURE – Index C9

Bit	Name	R/W	Default	Description
7	Reserved	RO	0	Return 0 when read.
6-0	BOUND4TMP3	R/W	1Eh (30°C)	The 4st BOUNDARY temperature for VT3 in temperature mode. When VT3 temperature is **exceed** this boundary, FAN3 expect value will load from segment **4** register (index CDh). When VT3 temperature is **below** this boundary – hysteresis, FAN3 expect value will load from segment **5** register (index CDh).

8.6.2.63 FAN3 SEGMENT 1 SPEED COUNT – Index CAh

Bit	Name	R/W	Default	Description
7-0	SEC1SPEED3	R/W	FFh (100%)	The meaning of this register is depending on the FAN3_MODE(CR96) **2'b00:** The value that set in this byte is the relative expect fan speed % of the full speed in this temperature section. Ex: 100%:full speed: User must set this register to 0. 60% full speed: (100-60)*32/60, so user must program 21 to this reg. X% full speed: The value programming in this byte is ➔ (100-X)*32/X **2'b01:** The value that set in this byte is mean the expect PWM duty-cycle in this temperature section.

Fintek Confidential Do Not Copy

8.6.2.64 FAN3 SEGMENT 2 SPEED COUNT – Index CBh

Bit	Name	R/W	Default	Description
7-0	SEC2SPEED3	R/W	D9h (85%)	The meaning of this register is depending on the FAN3_MODE(CR96) **2'b00:** The value that set in this byte is the relative expect fan speed % of the full speed in this temperature section. **2'b01:** The value that set in this byte is mean the expect PWM duty-cycle in this temperature section.

8.6.2.65 FAN3 SEGMENT 3 SPEED COUNT – Index CCh

Bit	Name	R/W	Default	Description
7-0	SEC3SPEED3	R/W	B2h (70%)	The meaning of this register is depending on the FAN3_MODE(CR96) **2'b00:** The value that set in this byte is the relative expect fan speed % of the full speed in this temperature section. **2'b01:** The value that set in this byte is mean the expect PWM duty-cycle in this temperature section.

8.6.2.66 FAN3 SEGMENT 4 SPEED COUNT – Index CDh

Bit	Name	R/W	Default	Description
7-0	SEC4SPEED3	R/W	99h (60%)	The meaning of this register is depending on the FAN3_MODE(CR96) **2'b00:** The value that set in this byte is the relative expect fan speed % of the full speed in this temperature section. **2'b01:** The value that set in this byte is mean the expect PWM duty-cycle in this temperature section.

8.6.2.67 FAN3 SEGMENT 5 SPEED COUNT – Index CEh

Bit	Name	R/W	Default	Description
7-0	SEC5SPEED3	R/W	80h (50%)	The meaning of this register is depending on the FAN3_MODE(CR96) **2'b00:** The value that set in this byte is the relative expect fan speed % of the full speed in this temperature section. **2'b01:** The value that set in this byte is mean the expect PWM duty-cycle in this temperature section.

8.6.2.68 FAN3 Temperature Mapping Select – Index CFh

Bit	Name	R/W	Default	Description
7-6	Reserved	--	0	Reserved
5	FAN3_UP_T_EN	R/W	0	Set 1 to force FAN3 to full speed if any temperature over its high limit.

Fintek Confidential Do Not Copy

4	FAN3_INTERPOLATION_EN	R/W	0	Set 1 will enable the interpolation of the fan expect table.
3	FAN3_JUMP_HIGH_EN	R/W	0	This register controls the FAN3 duty movement when temperature over highest boundary. 0: The FAN3 duty will increases with the slope selected by FAN3_RATE_SEL register. 1: The FAN3 duty will directly jumps to the value of SEC1SPEED3 register. This bit only activates in duty mode.
2	FAN3_JUMP_LOW_EN	R/W	0	This register controls the FAN3 duty movement when temperature under (highest boundary – hysteresis). 0: The FAN3 duty will decreases with the slope selected by FAN3_RATE_SEL register. 1: The FAN3 duty will directly jumps to the value of SEC2SPEED3 register. This bit only activates in duty mode.
1-0	Fan3_temp_sel	R/W	3	0: reserved. 1: fan3 follow temperature 1. 2: fan3 follow temperature 2. 3: fan3 follow temperature 3.

Fintek Confidential
Do Not Copy!

Fan4 Index D0h- DFh

Address	Attribute	Default Value	Description
D0h	RO	8'h0f	FAN4 count reading (MSB). At the moment of reading this register, the LSB will be latched. This will prevent from data updating when reading. To read the fan count correctly, read MSB first and followed read the LSB.
D1h	RO	8'hff	FAN4 count reading (LSB).
D2h	R/W	8'h00	**RPM mode(CR96 bit6=0):** FAN4 expect speed count value (MSB), in auto fan mode(CR96 bit7➔0) this register is auto updated by hardware. **Duty mode(CR96 bit6=1):** This byte is reserved byte.
D3h	R/W	8'h01	**RPM mode(CR96 bit6=0):** FAN4 expect speed count value (LSB) or expect PWM duty , in auto fan mode this register is auto updated by hardware and read only. **Duty mode(CR96 bit6=1):** The Value programming in this byte is duty value. In auto fan mode(CR96

			bit7➔0) this register is updated by hardware. Ex: 5➔ 5*100/255 % 255 ➔ 100%
D4h	R/W	8'h03	FAN4 full speed count reading (MSB). At the moment of reading this register, the LSB will be latched. This will prevent from data updating when reading. To read the fan count correctly, read MSB first and followed read the LSB.
D5h	R/W	8'hff	FAN4 full speed count reading (LSB).

8.6.2.69 VT4 BOUNDARY 1 TEMPERATURE – Index D6h

Bit	Name	R/W	Default	Description
7	Reserved	RO	0	Return 0 when read.
6-0	BOUND1TMP4	R/W	3Ch (60°C)	The 1st BOUNDARY temperature for VT4 in temperature mode. When VT4 temperature is **exceed** this boundary, FAN4 expect value will load from segment **1** register (index DA)h. When VT4 temperature is **below** this boundary – hysteresis, FAN4 expect value will load from segment **2** register (index DAh).

8.6.2.70 VT4 BOUNDARY 2 TEMPERATURE – Index D7

Bit	Name	R/W	Default	Description
7	Reserved	RO	0	Return 0 when read.
6-0	BOUND2TMP4	R/W	32 (50°C)	The 2st BOUNDARY temperature for VT4 in temperature mode. When VT4 temperature is **exceed** this boundary, FAN4 expect value will load from segment **2** register (index DB)h. When VT4 temperature is **below** this boundary – hysteresis, FAN4 expect value will load from segment **3** register (index DBh).

8.6.2.71 VT4 BOUNDARY 3 TEMPERATURE – Index D8h

Bit	Name	R/W	Default	Description
7	Reserved	RO	0	Return 0 when read.
6-0	BOUND3TMP4	R/W	28h (40°C)	The 3st BOUNDARY temperature for VT4 in temperature mode. When VT4 temperature is **exceed** this boundary, FAN4 expect value will load from segment **3** register (indexDC)h. When VT4 temperature is **below** this boundary – hysteresis, FAN4 expect value will load from segment **4** register (index DCh).

8.6.2.72 VT4 BOUNDARY 4 TEMPERATURE – Index D9

Bit	Name	R/W	Default	Description
7	Reserved	RO	0	Return 0 when read.

Fintek Confidential Do Not Copy

6-0	BOUND4TMP4	R/W	1Eh (30°C)	The 4st BOUNDARY temperature for VT4 in temperature mode. When VT4 temperature is **exceed** this boundary, FAN4 expect value will load from segment **4** register (index ADh). When VT4 temperature is **below** this boundary – hysteresis, FAN4 expect value will load from segment **5** register (index DDh).

8.6.2.73 FAN4 SEGMENT 1 SPEED COUNT – Index DAh

Bit	Name	R/W	Default	Description
7-0	SEC1SPEED4	R/W	FFh (100%)	The meaning of this register is depending on the FAN4_MODE(CR96) **2'b00:** The value that set in this byte is the relative expect fan speed % of the full speed in this temperature section. Ex: 100%:full speed: User must set this register to 0. 60% full speed: (100-60)*32/60, so user must program 21 to this reg. X% full speed: The value programming in this byte is ➔ (100-X)*32/X **2'b01:** The value that set in this byte is mean the expect PWM duty-cycle in this temperature section.

8.6.2.74 FAN4 SEGMENT 2 SPEED COUNT – Index DBh

Bit	Name	R/W	Default	Description
7-0	SEC2SPEED4	R/W	D9h (85%)	The meaning of this register is depending on the FAN4_MODE(CR96) **2'b00:** The value that set in this byte is the relative expect fan speed % of the full speed in this temperature section. **2'b01:** The value that set in this byte is mean the expect PWM duty-cycle in this temperature section.

8.6.2.75 FAN4 SEGMENT 3 SPEED COUNT – Index DCh

Bit	Name	R/W	Default	Description
7-0	SEC3SPEED4	R/W	B2h (70%)	The meaning of this register is depending on the FAN4_MODE(CR96) **2'b00:** The value that set in this byte is the relative expect fan speed % of the full speed in this temperature section. **2'b01:** The value that set in this byte is mean the expect PWM duty-cycle in this temperature section.

8.6.2.76 FAN4 SEGMENT 4 SPEED COUNT – Index DDh

Bit	Name	R/W	Default	Description
7-0	SEC4SPEED4	R/W	99h (60%)	The meaning of this register is depending on the FAN4_MODE(CR96) **2'b00:** The value that set in this byte is the relative expect fan speed % of the full speed in this temperature section. **2'b01:** The value that set in this byte is mean the expect PWM duty-cycle in this temperature section.

Fintek Confidential Do Not Copy!!

8.6.2.77 FAN4 SEGMENT 5 SPEED COUNT – Index DEh

Bit	Name	R/W	Default	Description
7-0	SEC5SPEED4	R/W	80h (50%)	The meaning of this register is depending on the FAN4_MODE(CR96) **2'b00:** The value that set in this byte is the relative expect fan speed % of the full speed in this temperature section. **2'b01:** The value that set in this byte is mean the expect PWM duty-cycle in this temperature section.

8.6.2.78 FAN4 Temperature Mapping Select – Index DFh

Bit	Name	R/W	Default	Description
7-6	Reserved	--	0	Reserved
5	FAN4_UP_T_EN	R/W	0	Set 1 to force FAN4 to full speed if any temperature over its high limit.
4	FAN4_INTERPOLATION_EN	R/W	0	Set 1 will enable the interpolation of the fan expect table.
3	FAN4_JUMP_HIGH_EN	R/W	0	This register controls the FAN4 duty movement when temperature over highest boundary. 0: The FAN4 duty will increases with the slope selected by FAN4_RATE_SEL register. 1: The FAN4 duty will directly jumps to the value of SEC1SPEED4 register. This bit only activates in duty mode.
2	FAN4_JUMP_LOW_EN	R/W	0	This register controls the FAN4 duty movement when temperature under (highest boundary – hysteresis). 0: The FAN4 duty will decreases with the slope selected by FAN4_RATE_SEL register. 1: The FAN4 duty will directly jumps to the value of SEC2SPEED4 register. This bit only activates in duty mode.
1-0	Fan4_temp_sel	R/W	0	0: reserved. 1: fan4 follow temperature 1. 2: fan4 follow temperature 2. 3: fan4 follow temperature 3.

Fintek Confidential
Do Not Copy!

8.7 KBC Registers (CR05)

8.7.1 KBC Configuration Registers

KBC Device Enable Register — Index 30h

Bit	Name	R/W	Default	Description
7-1	Reserved	-	-	Reserved
0	KBC_EN	R/W	1	0: disable KBC. 1: enable KBC. When the DTR1# is pulled down. KBC_EN is reset to 0.DTR1# is internal pull up.

Base Address High Register — Index 60h

Bit	Name	R/W	Default	Description
7-0	BASE_ADDR_HI	R/W	00h	The MSB of KBC command port address. The address of data port is command port address + 4;

Base Address Low Register — Index 61h

Bit	Name	R/W	Default	Description
7-0	BASE_ADDR_LO	R/W	60h	The LSB of KBC command port address. The address of data port is command port address + 4.

KB IRQ Channel Select Register — Index 70h

Bit	Name	R/W	Default	Description
7-4	Reserved	-	-	Reserved.
3-0	SELKIRQ	R/W	0h	Select the IRQ channel for keyboard interrupt.

Fintek Confidential
Do Not Copy!

Mouse IRQ Channel Select Register — Index 72h

Bit	Name	R/W	Default	Description
7-4	Reserved	-	-	Reserved.
3-0	SELMIRQ	R/W	0h	Select the IRQ channel for PS/2 mouse interrupt.

Clock Select Register — Index F0h

Bit	Name	R/W	Default	Description
7-6	SELCLK_KBC	R/W	10	00: select 6MHz clock as KBC clock input. 01: select 8MHz clock as KBC clock input. 10: select 12MHz clock as KBC clock input (default). 11: select 16MHz clock as KBC clock input.
5-2	Reserved	-	-	Reserved.
1	GA20_EN	R/W	1	0: GATE20# software control. 1: GATE20# hardware speed up.
0	HKBRST	R/W	1	0: KBRST# software control. 1: KBRST# hardware speed up.

Fintek Confidential
Do Not Copy!

8.8 GPIO Registers (CR06)

8.8.1 Configuration Registers

GPIO Output Enable Register — Index F0h

Bit	Name	R/W	Default	Description
7	GPIO7_OE	R/W	0	0: GPIO7 is in input mode. 1: GPIO7 is in output mode.
6	GPIO6_OE	R/W	0	0: GPIO6 is in input mode. 1: GPIO6 is in output mode.
5	GPIO5_OE	R/W	0	0: GPIO5 is in input mode. 1: GPIO5 is in output mode.
4	GPIO4_OE	R/W	0	0: GPIO4 is in input mode. 1: GPIO4 is in output mode.
3	GPIO3_OE	R/W	0	0: GPIO3 is in input mode. 1: GPIO3 is in output mode.
2	GPIO2_OE	R/W	0	0: GPIO2 is in input mode. 1: GPIO2 is in output mode.
1	GPIO1_OE	R/W	0	0: GPIO1 is in input mode. 1: GPIO1 is in output mode.
0	GPIO0_OE	R/W	0	0: GPIO0 is in input mode. 1: GPIO0 is in output mode.

GPIO Output Data Register — Index F1h

Bit	Name	R/W	Default	Description
7	GPIO7_VAL	R/W	1	0: GPIO7 outputs 0 when in output mode. 1: GPIO7 outputs1 when in output mode.
6	GPIO6_VAL	R/W	1	0: GPIO6 outputs 0 when in output mode. 1: GPIO6 outputs1 when in output mode.
5	GPIO5_VAL	R/W	1	0: GPIO5 outputs 0 when in output mode. 1: GPIO5 outputs 1 when in output mode.
4	GPIO4_VAL	R/W	1	0: GPIO4 outputs 0 when in output mode. 1: GPIO4 outputs 1 when in output mode.
3	GPIO3_VAL	R/W	1	0: GPIO3 outputs 0 when in output mode. 1: GPIO3 outputs 1 when in output mode.
2	GPIO2_VAL	R/W	1	0: GPIO2 outputs 0 when in output mode. 1: GPIO2 outputs 1 when in output mode.
1	GPIO1_VAL	R/W	1	0: GPIO1 outputs 0 when in output mode. 1: GPIO1 outputs 1 when in output mode.
0	GPIO0_VAL	R/W	1	0: GPIO0 outputs 0 when in output mode. 1: GPIO0 outputs 1 when in output mode.

GPIO Pin Status Register — Index F2h

Bit	Name	R/W	Default	Description

Fintek Confidential
Do Not Copy

7	GPIO7_IN	R	-	The pin status of GPIO07/Turbo1#.
6	GPIO6_IN	R	-	The pin status of SLOTOCC#/GPIO06.
5	GPIO5_IN	R	-	The pin status of VIDOUT5/GPIO05/SIC.
4	GPIO4_IN	R	-	The pin status of VIDOUT4/GPIO04.
3	GPIO3_IN	R	-	The pin status of VIDOUT3/GPIO03.
2	GPIO2_IN	R	-	The pin status of VIDOUT2/GPIO02.
1	GPIO1_IN	R	-	The pin status of VIDOUT1/GPIO01.
0	GPIO0_IN	R	-	The pin status of VIDOUT0/GPIO00.

GPIO Drive Enable Register — Index F3h

Bit	Name	R/W	Default	Description
7	GPIO7_DRV_EN	R/W	0	0: GPIO7 is open drain in output mode. 1: GPIO7 is push pull in output mode.
6	GPIO6_DRV_EN	R/W	0	0: GPIO6 is open drain in output mode. 1: GPIO6 is push pull in output mode.
5	GPIO5_DRV_EN	R/W	0	0: GPIO5 is open drain in output mode. 1: GPIO5 is push pull in output mode.
4	GPIO4_DRV_EN	R/W	0	0: GPIO4 is open drain in output mode. 1: GPIO4 is push pull in output mode.
3	GPIO3_DRV_EN	R/W	0	0: GPIO3 is open drain in output mode. 1: GPIO3 is push pull in output mode.
2	GPIO2_DRV_EN	R/W	0	0: GPIO2 is open drain in output mode. 1: GPIO2 is push pull in output mode.
1	GPIO1_DRV_EN	R/W	0	0: GPIO1 is open drain in output mode. 1: GPIO1 is push pull in output mode.
0	GPIO0_DRV_EN	R/W	0	0: GPIO0 is open drain in output mode. 1: GPIO0 is push pull in output mode.

GPIO1 Output Enable Register — Index E0h

Bit	Name	R/W	Default	Description
7	GPIO17_OE	R/W	0	0: GPIO16 is in input mode. 1: GPIO16 is in output mode.
6	GPIO16_OE	R/W	0	0: GPIO16 is in input mode. 1: GPIO16 is in output mode.
5	GPIO15_OE	R/W	0	0: GPIO15 is in input mode. 1: GPIO15 is in output mode.
4	GPIO14_OE	R/W	0	0: GPIO14 is in input mode. 1: GPIO14 is in output mode.
3	GPIO13_OE	R/W	0	0: GPIO13 is in input mode. 1: GPIO13 is in output mode.
2	GPIO12_OE	R/W	0	0: GPIO12 is in input mode. 1: GPIO12 is in output mode.
1	GPIO11_OE	R/W	0	0: GPIO11 is in input mode. 1: GPIO11 is in output mode.

Fintek Confidential
Do Not Copy!

0	GPIO10_OE	R/W	0	0: GPIO10 is in input mode. 1: GPIO10 is in output mode.

GPIO1 Output Data Register — Index E1h

Bit	Name	R/W	Default	Description
7	GPIO17_VAL	R/W	1	0: GPIO16 outputs 0 when in output mode. 1: GPIO16 outputs1 when in output mode.
6	GPIO16_VAL	R/W	1	0: GPIO16 outputs 0 when in output mode. 1: GPIO16 outputs1 when in output mode.
5	GPIO15_VAL	R/W	1	0: GPIO15 outputs 0 when in output mode. 1: GPIO15 outputs 1 when in output mode.
4	GPIO14_VAL	R/W	1	0: GPIO14 outputs 0 when in output mode. 1: GPIO14 outputs 1 when in output mode.
3	GPIO13_VAL	R/W	1	0: GPIO13 outputs 0 when in output mode. 1: GPIO13 outputs 1 when in output mode.
2	GPIO12_VAL	R/W	1	0: GPIO12 outputs 0 when in output mode. 1: GPIO12 outputs 1 when in output mode.
1	GPIO11_VAL	R/W	1	0: GPIO11 outputs 0 when in output mode. 1: GPIO11 outputs 1 when in output mode.
0	GPIO10_VAL	R/W	1	0: GPIO10 outputs 0 when in output mode. 1: GPIO10 outputs 1 when in output mode.

GPIO1 Pin Status Register — Index E2h

Bit	Name	R/W	Default	Description
7	GPIO17_IN	R	-	The pin status of GPIO17.
6	GPIO16_IN	R	-	The pin status of GPIO16/LED_VCC/Turbo2#
5	GPIO15_IN	R	-	The pin status of GPIO15/LED_VSB.
4	GPIO14_IN	R	-	The pin status of GPIO14/FWH_DIS/WDTRST#.
3	GPIO13_IN	R	-	The pin status of GPIO13/SPI_MOSI/BEEP.
2	GPIO12_IN	R	-	The pin status of GPIO12/SPI_MISO/FANCTRL1_1.
1	GPIO11_IN	R	-	The pin status of GPIO11/SPI_CS0#/FANCTRL4.
0	GPIO10_IN	R	-	The pin status of GPIO10/SPI_CLK/FANIN4.

GPIO1 Drive Enable Register — Index E3h

Bit	Name	R/W	Default	Description
7	GPIO17_DRV_EN	R/W	0	0: GPIO17 is open drain in output mode. 1: GPIO17 is push pull in output mode.
6	GPIO16_DRV_EN	R/W	0	0: GPIO16 is open drain in output mode. 1: GPIO16 is push pull in output mode.
5	GPIO15_DRV_EN	R/W	0	0: GPIO15 is open drain in output mode. 1: GPIO15 is push pull in output mode.
4	GPIO14_DRV_EN	R/W	0	0: GPIO14 is open drain in output mode. 1: GPIO14 is push pull in output mode.

Fintek Confidential
Do Not Copy!

3	GPIO13_DRV_EN	R/W	0	0: GPIO13 is open drain in output mode. 1: GPIO13 is push pull in output mode.
2	GPIO12_DRV_EN	R/W	0	0: GPIO12 is open drain in output mode. 1: GPIO12 is push pull in output mode.
1	GPIO11_DRV_EN	R/W	0	0: GPIO11 is open drain in output mode. 1: GPIO11 is push pull in output mode.
0	GPIO10_DRV_EN	R/W	0	0: GPIO10 is open drain in output mode. 1: GPIO10 is push pull in output mode.

GPIO2 Output Enable Register — Index D0h

Bit	Name	R/W	Default	Description
7	GPIO27_OE	R/W	0	0: GPIO27 is in input mode. 1: GPIO27 is in output mode.
6	GPIO26_OE	R/W	0	0: GPIO26 is in input mode. 1: GPIO26 is in output mode.
5	GPIO25_OE	R/W	0	0: GPIO25 is in input mode. 1: GPIO25 is in output mode.
4	GPIO24_OE	R/W	0	0: GPIO24 is in input mode. 1: GPIO24 is in output mode.
3	GPIO23_OE	R/W	0	0: GPIO23 is in input mode. 1: GPIO23 is in output mode.
2	GPIO22_OE	R/W	0	0: GPIO22 is in input mode. 1: GPIO22 is in output mode.
1	GPIO21_OE	R/W	0	0: GPIO21 is in input mode. 1: GPIO21 is in output mode.
0	GPIO20_OE	R/W	0	0: GPIO20 is in input mode. 1: GPIO20 is in output mode.

GPIO2 Output Data Register — Index D1h

Bit	Name	R/W	Default	Description
7	GPIO27_VAL	R/W	1	0: GPIO27 outputs 0 when in output mode. 1: GPIO27 outputs1 when in output mode.
6	GPIO26_VAL	R/W	1	0: GPIO26 outputs 0 when in output mode. 1: GPIO26 outputs1 when in output mode.
5	GPIO25_VAL	R/W	1	0: GPIO25 outputs 0 when in output mode. 1: GPIO25 outputs 1 when in output mode.
4	GPIO24_VAL	R/W	1	0: GPIO24 outputs 0 when in output mode. 1: GPIO24 outputs 1 when in output mode.
3	GPIO23_VAL	R/W	1	0: GPIO23 outputs 0 when in output mode. 1: GPIO23 outputs 1 when in output mode.
2	GPIO22_VAL	R/W	1	0: GPIO22 outputs 0 when in output mode. 1: GPIO22 outputs 1 when in output mode.
1	GPIO21_VAL	R/W	1	0: GPIO21 outputs 0 when in output mode. 1: GPIO21 outputs 1 when in output mode.

Fintek Confidential
Do Not Copy

0	GPIO20_VAL	R/W	1	0: GPIO20 outputs 0 when in output mode. 1: GPIO20 outputs 1 when in output mode.

GPIO2 Pin Status Register — Index D2h

Bit	Name	R/W	Default	Description
7	GPIO27_IN	R	-	The pin status of PWSOUT#/GPIO27.
6	GPIO26_IN	R	-	The pin status of PWSIN#/GPIO26.
5	GPIO25_IN	R	-	The pin status of PME#/GPIO25.
4	GPIO24_IN	R	-	The pin status of ATXPG_IN/GPIO24.
3	GPIO23_IN	R	-	The pin status of GPIO23/RSTCON#.
2	GPIO22_IN	R	-	The pin status of PCIRST3#/GPIO22.
1	GPIO21_IN	R	-	The pin status of PCIRST2#/GPIO21.
0	GPIO20_IN	R	-	The pin status of PCIRST1#/GPIO20.

GPIO2 Drive Enable Register — Index D3h

Bit	Name	R/W	Default	Description
7	GPIO27_DRV_EN	R/W	0	0: GPIO27 is open drain in output mode. 1: GPIO27 is push pull in output mode.
6	GPIO26_DRV_EN	R/W	0	0: GPIO26 is open drain in output mode. 1: GPIO26 is push pull in output mode.
5	GPIO25_DRV_EN	R/W	0	0: GPIO25 is open drain in output mode. 1: GPIO25 is push pull in output mode.
4	GPIO24_DRV_EN	R/W	0	0: GPIO24 is open drain in output mode. 1: GPIO24 is push pull in output mode.
3	GPIO23_DRV_EN	R/W	0	0: GPIO23 is open drain in output mode. 1: GPIO23 is push pull in output mode.
2	GPIO22_DRV_EN	R/W	0	0: GPIO22 is open drain in output mode. 1: GPIO22 is push pull in output mode.
1	GPIO21_DRV_EN	R/W	0	0: GPIO21 is open drain in output mode. 1: GPIO21 is push pull in output mode.
0	GPIO20_DRV_EN	R/W	0	0: GPIO20 is open drain in output mode. 1: GPIO20 is push pull in output mode.

GPIO3 Output Enable Register — Index C0h

Bit	Name	R/W	Default	Description
7-4	Reserved	-	-	Reserved.
3	GPIO33_OE	R/W	0	0: GPIO33 is in input mode. 1: GPIO33 is in output mode.
2	GPIO32_OE	R/W	0	0: GPIO32 is in input mode. 1: GPIO32 is in output mode.
1	GPIO31_OE	R/W	0	0: GPIO31 is in input mode. 1: GPIO31 is in output mode.
0	GPIO30_OE	R/W	0	0: GPIO30 is in input mode. 1: GPIO30 is in output mode.

Fintek Confidential
Do Not Copy!

GPIO3 Output Data Register — Index C1h

Bit	Name	R/W	Default	Description
7-4	Reserved	-	-	Reserved.
3	GPIO33_VAL	R/W	1	0: GPIO33 outputs 0 when in output mode. 1: GPIO33 outputs 1 when in output mode.
2	GPIO32_VAL	R/W	1	0: GPIO32 outputs 0 when in output mode. 1: GPIO32 outputs 1 when in output mode.
1	GPIO31_VAL	R/W	1	0: GPIO31 outputs 0 when in output mode. 1: GPIO31 outputs 1 when in output mode.
0	GPIO30_VAL	R/W	1	0: GPIO30 outputs 0 when in output mode. 1: GPIO30 outputs 1 when in output mode.

GPIO3 Pin Status Register — Index C2h

Bit	Name	R/W	Default	Description
7-4	Reserved	-	-	Reserved.
3	GPIO33_IN	R	-	The pin status of RSMRST#/GPIO33.
2	GPIO32_IN	R	-	The pin status of PWROK/GPIO32.
1	GPIO31_IN	R	-	The pin status of PS_ON#/GPIO31.
0	GPIO30_IN	R	-	The pin status of S3#/GPIO30.

GPIO3 Drive Enable Register — Index C3h

Bit	Name	R/W	Default	Description
7-4	Reserved	-	-	Reserved.
3	GPIO33_DRV_EN	R/W	0	0: GPIO33 is open drain in output mode. 1: GPIO33 is push pull in output mode.
2	GPIO32_DRV_EN	R/W	0	0: GPIO32 is open drain in output mode. 1: GPIO32 is push pull in output mode.
1	GPIO31_DRV_EN	R/W	0	0: GPIO31 is open drain in output mode. 1: GPIO31 is push pull in output mode.
0	GPIO30_DRV_EN	R/W	0	0: GPIO30 is open drain in output mode. 1: GPIO30 is push pull in output mode.

GPIO4 Output Enable Register — Index B0h

Bit	Name	R/W	Default	Description
7-4	Reserved	-	-	Reserved.
3	GPIO43_OE	R/W	0	0: GPIO43 is in input mode. 1: GPIO43 is in output mode.
2	GPIO42_OE	R/W	0	0: GPIO42 is in input mode. 1: GPIO42 is in output mode.
1	GPIO41_OE	R/W	0	0: GPIO41 is in input mode. 1: GPIO41 is in output mode.
0	GPIO40_OE	R/W	0	0: GPIO40 is in input mode. 1: GPIO40 is in output mode.

Fintek Confidential
Do Not Copy!

GPIO4 Output Data Register — Index B1h

Bit	Name	R/W	Default	Description
7-4	Reserved	-	-	Reserved.
3	GPIO43_VAL	R/W	1	0: GPIO43 outputs 0 when in output mode. 1: GPIO43 outputs 1 when in output mode.
2	GPIO42_VAL	R/W	1	0: GPIO42 outputs 0 when in output mode. 1: GPIO42 outputs 1 when in output mode.
1	GPIO41_VAL	R/W	1	0: GPIO41 outputs 0 when in output mode. 1: GPIO41 outputs 1 when in output mode.
0	GPIO40_VAL	R/W	1	0: GPIO40 outputs 0 when in output mode. 1: GPIO40 outputs 1 when in output mode.

GPIO4 Pin Status Register — Index B2h

Bit	Name	R/W	Default	Description
7-4	Reserved	-	-	Reserved.
3	GPIO43_IN	R	-	The pin status of IRRX/GPIO43
2	GPIO42_IN	R	-	The pin status of IRTX/GPIO42.
1	GPIO41_IN	R	-	The pin status of FANCTRL3/GPIO41.
0	GPIO40_IN	R	-	The pin status of FANIN3/GPIO40.

GPIO4 Drive Enable Register — Index B3h

Bit	Name	R/W	Default	Description
7-4	Reserved	-	-	Reserved.
3	GPIO43_DRV_EN	R/W	0	0: GPIO43 is open drain in output mode. 1: GPIO43 is push-pull in output mode.
2	GPIO42_DRV_EN	R/W	0	0: GPIO42 is open drain in output mode. 1: GPIO42 is push-pull in output mode.
1	GPIO41_DRV_EN	R/W	0	0: GPIO41 is open drain in output mode. 1: GPIO41 is push-pull in output mode.
0	GPIO40_DRV_EN	R/W	0	0: GPIO40 is open drain in output mode. 1: GPIO40 is push-pull in output mode.

Fintek Confidential
Do Not Copy!

8.9 VID Registers (CR07)

8.9.1 VID Configuration Registers

VID Device Enable Register — Index 30h

Bit	Name	R/W	Default	Description
7-1	Reserved	-	0	Reserved
0	VID_EN	R/W	0	0: disable VID. 1: enable VID.

Base Address High Register — Index 60h

Bit	Name	R/W	Default	Description
7-0	BASE_ADDR_HI	R/W	00h	The MSB of VID base address.

Base Address Low Register — Index 61h

Bit	Name	R/W	Default	Description
7-0	BASE_ADDR_LO	R/W	00h	The LSB of VID base address.

Fintek Confidential
Do Not Copy

8.9.2 Device Registers

8.9.2.1 Configuration Register — Index 00h (* cleared by slotocc_n and watch dog timeout)

Bit	Name	R/W	Default	Description
7	WDOUT_EN	R/W	0	If this bit is set to 1 and watchdog timeout event occurs, RSTOUT# output is enabled.
6*	GP_OTF_EN1	R/W	0	If this bit is set to 1 and OTF_EN is also set to 1, users can control vid on-the-fly by GPIO16/LED_VCC/Turbo2#.
5*	GP_SWITCH1_EN	R/W	0	If this bit is set to 1, users can select “SWITCH_SEL” by controlling GPIO16/LED_VCC/Turbo2#.
4*	GP_SWITCH0_EN	R/W	0	If this bit is set to 1, users can select “SWITCH_SEL” by controlling GPIO07/Turbo1#.
3*	GP_OTF_EN0	R/W	0	If this bit is set to 1 and OTF_EN is also set to 1, users can control vid on-the-fly by GPIO07/Turbo1#.
2*	OTF_EN	R/W	0	This bit is used to enable vid on-the-fly function.

1:0	VRM_SEL	R/W	0	0: Intel VRM10.0 1: Intel VRM11.0 2: AMD VRM 3: Reserved

8.9.2.2 VID Offset Register 0 — Index 01h

Bit	Name	R/W	Default	Description
7:6	Reserved	R	-	Reserved
5-0	VID_OFFSET0	R/W	0	VID offset. VID_OFFSET[5] is sign bit.

8.9.2.3 VID Manual Register — Index 02h

Bit	Name	R/W	Default	Description
7	MANUAL_MODE	R/W	0	If this bit is set to 1 and OTF_EN is 0, VIDOUT will be VID_MANUAL
6	KEY_OK	R	-	This bit is 1 represents that the serial key is entered correctly.
5-0	VID_MANUAL	R/W	0	Manually assigned VIDOUT value

8.9.2.4 Serial Key Data Register — Index 03h

Bit	Name	R/W	Default	Description
7-0	KEY_DATA	R/W	0	Write serial data to this register correctly, the KEY_OK bit will be set to 1. Hence, users are able to write key protected registers. The sequence to enable KEY_OK is 0x32, 0x5D, 0x42, 0xAC. When KEY_OK is set, write this register 0x35 will clear KEY_OK.

8.9.2.5 VIDIN Register — Index 04h (* cleared by slotocc_n and watch dog timeout)

Bit	Name	R/W	Default	Description
7*	VIDIN_MODE	R/W	1	1: VIDIN will be pin status of P_VIDIN 0: P_VIDIN value will be latched when this bit is set to 0 (from 1). At the same time, P_VIDIN will turn to output mode and VID_MANUAL will be output from P_VIDIN.
6	Reserved	R	0	Reserved
5:0	VIDIN	R	-	The value of this register depends on the VIDIN_MODE register: VIDIN_MODE is 1: the register indicates the VID reading from CPU (the pin status of VID_IN[5:0]). VIDIN_MODE is 0: the register latches the value of VID_IN[5:0] when VIDIN_MODE changed from 1 to 0.

Fintek Confidential Do Not Copy

8.9.2.6 Watchdog Timer Configuration Register 1— Index 05h

Bit	Name	R/W	Default	Description
7	Reserved	R	0	Reserved
6	WDTMOUT_STS	R/W	0	If watchdog timeout event occurs, this bit will be set to 1. Write a 1 to this bit will clear it to 0.
5	WD_EN	R/W	0	If this bit is set to 1, the counting of watchdog time is enabled.
4	WD_PULSE	R/W	0	Select output mode (0: level, 1: pulse) of RSTOUT# by setting this bit.
3	WD_UNIT	R/W	0	Select time unit (0: 1sec, 1: 60 sec) of watchdog timer by setting this bit.
2	WD_HACTIVE	R/W	0	Select output polarity of RSTOUT# (1: high active, 0: low active) by setting this bit.
1:0	WD_PSWIDTH	R/W	0	Select output pulse width of RSTOUT# 0: 1 ms 1: 25 ms 2: 125 ms 3: 5 sec

8.9.2.7 Watchdog Timer Configuration Register 2 — Index 06h

Bit	Name	R/W	Default	Description
7:0	WD_TIME	R/W	0	Time of watchdog timer

8.9.2.8 Output Voltage Control Register 1 — Index 07h (* cleared by slotocc_n and watch dog timeout)

Bit	Name	R/W	Default	Description
7*	SWITCH_EN	R/W	0	0: If OVER_VOL_EN is 0, AVOUT equals to AVIN. 1: If OVER_VOL_EN is 1, AVOUT is controlled by SWITCH_SEL.
6	OVER_VOL_EN	R/W	1	If this bit is 1, AVOUT function is enabled.
5:4	Reserved	R/W	0	Reserved
3:0*	SWITCH_SEL0	R/W	7	SWITCH_SEL0 is used to control AVOUT according to AVIN.

8.9.2.9 Output Voltage Control Register 2 — Index 08h (* cleared by slotocc_n and watch dog timeout)

Bit	Name	R/W	Default	Description
7:4*	SWITCH_SEL2	R/W	7	SWITCH_SEL2 is used to control AVOUT according to AVIN.
3:0*	SWITCH_SEL1	R/W	7	SWITCH_SEL1 is used to control AVOUT according to AVIN.

8.9.2.10 Output Voltage Control Register 3 — Index 09h

Bit	Name	R/W	Default	Description

Fintek Confidential Do Not Copy!

7:4*	Reserved	R	0	Reserved
3:0*	SWITCH_SEL3	R/W	7	SWITCH_SEL3 is used to control AVOUT according to AVIN.

8.9.2.11 P_VIDIN Output Mode Control Register — Index 0Ah (* cleared by slotocc_n and watch dog timeout)

Bit	Name	R/W	Default	Description
7:6	Reserved	R/W	0	Reserved
5:0*	VIDIN_OD	R/W	3Fh	If VID_IN_MODE is set to 0, P_VIDIN will be output and the output value is VID_MANUAL. VIDIN_OD can individually control the P_VIDIN output mode (1: open drain; 0: push pull)

8.9.2.12 VID Offset Register 1 — Index 0Bh

Bit	Name	R/W	Default	Description
7:6	Reserved	R	-	Reserved
5-0	VID_OFFSET1	R/W	0	VID offset. VID_OFFSET[5] is sign bit.

8.9.2.13 VID Offset Register 2 — Index 0Ch

Bit	Name	R/W	Default	Description
7:6	Reserved	R	-	Reserved
5-0	VID_OFFSET2	R/W	0	VID offset. VID_OFFSET[5] is sign bit.

8.9.2.14 VID Offset Register 3 — Index 0Ch

Bit	Name	R/W	Default	Description
7:6	Reserved	R	-	Reserved
5-0	VID_OFFSET3	R/W	0	VID offset. VID_OFFSET[5] is sign bit.

8.9.2.15 Turbo Invert Register — Index 0Eh

Bit	Name	R/W	Default	Description
7:4	Reserved	R	-	Reserved
3	GP_SWITCH_INV1	R/W	1	This bit can invert Turbo2 signals when GP_SWITCH1_EN is set to 1.
2	GP_SWITCH_INV0	R/W	1	This bit can invert Turbo1 signals when GP_SWITCH0_EN is set to 1.
1	GP_OTF_INV1	R/W	1	This bit can invert Turbo2 signals when GP_OTF_EN1 is set to 1.
0	GP_OTF_INV0	R/W	1	This bit can invert Turbo1 signals when GP_OTF_EN0 is set to 1.

Fintek Confidential Do Not Copy

8.10 SPI Registers (CR08)

8.10.1 Configuration Register

SPI Control Register — Index F0h

Bit	Name	R/W	Default	Description
7-6	Reserved	-	-	Reserved.
5	SPTIE	R/W	0	SPI interrupt enable. Set to 1, SPIE interrupt enabled, set to 0 spie interrupt disabled.
4	MSTR	R/W	1	Master mode select. Set to 1, SPI function is master mode; set to 0 is disable SPI function
3	CPOL	R/W	0	Clock polarity this bit selects inverted or non-inverted SPI clock. Set to 1, active low clock selected; SCK idles high. Set to 0, active high clock selected; SCK idles low.
2	CPHA	R/W	0	Clock phase. This bit is used to shift the SCK serial clock. Set to 1, the first SCK edge is issued at the beginning of the transfer operation. Set to 0, the first SCK edge is issued one-half cycle into the transfer operation.
1	Reserved	-	0	Reserved
0	LSBFE	R/W	0	This bit control data shift from lsb or msb. Set to 1, data is transferred from lsb to msb. Set to 0, data is transferred from msb to lsb.

SPI Timeout Register — Index F1h

Bit	Name	R/W	Default	Description
7-0	TIMER_VAL	R/W	8'h04	The time in second to assert FWH_DIS signal when SPI in used as backup BIOS.

SPI Baud Rate Divisor Register — Index F2h

Bit	Name	R/W	Default	Description
7-3	Reserved	-	0	Reserved
2-0	Baud_val	R/W	1	This register decides to SCK frequency. Baud rate divisor equation is 33MHz/2*(BAUD_VAL). 00: 33MHz. 01: 16.7MHz.

Fintek Confidential
Do Not Copy!

SPI Status Register — Index F3h

Bit	Name	R/W	Default	Description
7	SPIE	R/W	0	SPI interrupt status. When SPI is transferred or received data from device finish, this bit will be set. Write 1 to clear this bit.
6	FWH_DIS	R/W	-	When SPI is used as backup BIOS, this bit will set when time in second reaches the value programmed in TIMER_VAL (CRF1). Write one to clear this register. When SPI is used as primary BIOS, this register will always be 1.
5	SPE	R	-	This bit reflects the SPI_EN register. (which will be 1 when SPI is enabled.)
4	SPI0_TIMER_DIS	R/W	-	When SPI is used as primary BIOS, it will also have backup function as used in backup BIOS. The bit will set to 1 when the time in second reaches the value programmed in TIMER_VAL (CRF1). That is the first SPI could not function well. Then a reset signal will asserted and reboot the system with the second SPI. (I could be another SPI with chip-selected by FWH_DIS or another 4Mbits of an 8Mbits SPI. The SPI_CS1_EN (CR2D[4]) determines the method). Write one to clear this bit.
3	SPTEF	R	0	SPI operation status. When SPI is transferred or received data from device, this bit will be set 1, Clear by SPI operation finish.
2-0	Reserved	-	-	Reserved

SPI High Byte Data Register — Index F4h

Bit	Name	R/W	Default	Description
7-0	H_DATA	R	0	When SPI is received 16 bits data from device. This register saves high byte data.

SPI command data Register — Index F5h

Bit	Name	R/W	Default	Description
7-0	CMD_DATA	R/W	0	This register provides command value for flash command.

SPI chip select Register — Index F6h

Bit	Name	R/W	Default	Description
7-4	Reserved	-	-	Reserved
3	CS3	R/W	0	Chip select 3. To select device 3

Fintek Confidential
Do Not Copy.

2	CS2	R/W	0	Chip select 2. To select device 2
1	CS1	R/W	0	Chip select 1. To select device 1
0	CS0	R/W	0	Chip select 0. To select device 0

SPI memory mapping Register — Index F7h

Bit	Name	R/W	Default	Description
7-3	Reserved	-	0	Reserved
2-0	Mem_map	R/W	-	This register decides memory size. 3'b000: one of the memory sizes is 512k bytes. 3'b001: one of the memory sizes is 1024k bytes. 3'b100: one of the memory sizes is 2048k bytes. 3'b011: one of the memory sizes is 4096k bytes. 3'b100: one of the memory sizes if 8092k bytes. The default value is power on strap by SOUT2. Pull down to select 4096k bytes size, else select 512k bytes size.

SPI operate Register — Index F8h

Bit	Name	R/W	Default	Description
7	TYPE	R/W	0	This bit decide flash continuous programming mode. Set to 1, if programming continuous mode is same as the SST flash. Set to 0 if programming continuous mode is same as the ATMEL flash
6	IO_SPI	R/W	0	This bit control SPI function transfer 8 bit command to device. Clear 0 by operation finish.
5	RDSR	R/W	0	This bit control SPI function read status from to device. Clear 0 by operation finish.
4	WRSR	R/W	0	This bit control SPI function write status to device. Clear 0 by operation finish.
3	SECTOR_ERASE	R/W	0	This bit control SPI function sector erase device. Clear 0 by operation finish.
2	READ_ID	R/W	0	This bit control SPI function read id from device. Clear 0 by operation finish.
1	PROG	R/W	0	This bit control SPI function program data to device or set to 1 when memory cycle for LPC interface program flash. Clear 0 by operation finish.
0	READ	R/W	0	This bit control SPI function read data from device or set to 1 when memory cycle for LPC interface read flash. Clear 0 by operation finish.

SPI Low Byte Data Register — Index FAh

Bit	Name	R/W	Default	Description

Fintek Confidential
Do Not Copy

7-0	L_DATA	R	0	When SPI received 16 bits or 8 bits data from device. This register saves low byte data.

SPI address high byte Register — Index FBh

Bit	Name	R/W	Default	Description
7-0	Addr_H_byte	R/W	0	This register provides high byte address for sector erase, program, read operation.

SPI address medium byte Register — Index FCh

Bit	Name	R/W	Default	Description
7-0	Addr_M_byte	R/W	0	This register provides medium byte address for sector erase, program, read operation.

SPI address low byte Register — Index FDh

Bit	Name	R/W	Default	Description
7-0	Addr_L_byte	R/W	0	This register provides low byte address for sector erase, program, read operation.

SPI program byte Register — Index FEh

Bit	Name	R/W	Default	Description
7-0	PORG_BYTE	R/W	0	This register provides number to program flash for continuous mode.

SPI write data Register — Index FFh

Bit	Name	R/W	Default	Description
7-0	WR_dat	R/W	0	This register provides data to write flash for program, write status function.

Fintek Confidential
Do Not Copy

8.11 PME and ACPI Registers (CR0A)

8.11.1 Configuration Register

Device Enable Register — Index 30h

Bit	Name	R/W	Default	Description
7-1	Reserved	-	-	Reserved
0	PME_EN	R/W	0	0: disable PME. 1: enable PME.

PME Event Enable Register — Index F0h

Bit	Name	R/W	Default	Description
7	Reserved	-	-	Reserved
6	MO_PME_EN	R/W	0	Mouse PME event enable. 0: disable mouse PME event. 1: enable mouse PME event.
5	KB_PME_EN	R/W	0	Keyboard PME event enable. 0: disable keyboard PME event. 1: enable keyboard PME event.
4	HM_PME_EN	R/W	0	Hardware monitor PME event enable. 0: disable hardware monitor PME event. 1: enable hardware monitor PME event.
3	PRT_PME_EN	R/W	0	Parallel port PME event enable. 0: disable parallel port PME event. 1: enable parallel port PME event.
2	UR2_PME_EN	R/W	0	UART 2 PME event enable. 0: disable UART 2 PME event. 1: enable UART 2 PME event.
1	UR1_PME_EN	R/W	0	UART 1 PME event enable. 0: disable UART 1 PME event. 1: enable UART 1 PME event.
0	FDC_PME_EN	R/W	0	FDC PME event enable. 0: disable FDC PME event. 1: enable FDC PME event.

PME Event Status Register — Index F1h

Bit	Name	R/W	Default	Description
7	Reserved	-	-	Reserved

Fintek Confidential
Do Not Copy!

6	MO_PME_ST	R/W	0	Mouse PME event status. 0: Mouse has no PME event. 1: Mouse has a PME event to assert. Write 1 to clear to be ready for next PME event.
5	KB_PME_ST	R/W	0	Keyboard PME event status. 0: Keyboard has no PME event. 1: Keyboard has a PME event to assert. Write 1 to clear to be ready for next PME event.
4	HM_PME_ST	R/W	0	Hardware monitor PME event status. 0: Hardware monitor has no PME event. 1: Hardware monitor has a PME event to assert. Write 1 to clear to be ready for next PME event.
3	PRT_PME_ST	R/W	0	Parallel port PME event status. 0: Parallel port has no PME event. 1: Parallel port has a PME event to assert. Write 1 to clear to be ready for next PME event.
2	UR2_PME_ST	R/W	0	UART 2 PME event status. 0: UART 2 has no PME event. 1: UART 2 has a PME event to assert. Write 1 to clear to be ready for next PME event.
1	UR1_PME_ST	R/W	0	UART 1 PME event status. 0: UART 1 has no PME event. 1: UART 1 has a PME event to assert. Write 1 to clear to be ready for next PME event.
0	FDC_PME_ST	R/W	1	FDC PME event status. 0: FDC has no PME event. 1: FDC has a PME event to assert. Write 1 to clear to be ready for next PME event.

ACPI Control Register — Index F4h

Bit	Name	R/W	Default	Description
7	Reserved	R/W	0	Dummy registers.
6	SPI_RST_EN	R/W	0	Set one to enable the reset signal from SPI via the PWROK or PCIRST#. (SPI as backup BIOS will assert a reset signal when FWH doesn't response in 4 seconds)
5	KEY_SEL_ADD	R/W	0	Set this bit one and KEY_SEL (CR2D[2:1]) 2'b00 will select windows 98 wakeup key as keyboard wakeup key.
4	EN_KBWAKEUP	R/W	0	Set one to enable keyboard wakeup event asserted via PWSOUT#.
3	EN_MOWAKEUP	R/W	0	Set one to enable mouse wakeup event asserted via PWSOUT#.
2-1	PWRCTRL	R/W	11	The ACPI Control the PSON_N to always on or always off or keep last state 00 : keep last state 10 : Always on 01 : Reserved (always on) 11: Always off
0	VSB_PWR_LOSS	R/W	0	When VSB 3V comes, it will set to 1, and write 1 to clear it

Fintek Confidential
Do Not Copy

ACPI Control Register — Index F5h

Bit	Name	R/W	Default	Description
7	SOFT_RST_ACPI	R/W	0	Software Reset to ACPI (auto clear after reset)
6	Reserved	-	-	Reserved
5	RSTCON_EN	R/W	0	0: Enable RSTCON# output via PWROK. 1: Enable RSTCON# output via PCIRST#.
4-3	DELAY	R/W	11	The PWROK delay timing from VDD3VOK by followed setting 00 : 100ms 01 : 200ms 10 : 300ms 11 : 400ms
2	VINDB_EN	R/W	1	Enable the PCIRSTIN_N and ATXPWGD debounce
1	PCIRST_DB_EN	R/W	0	Enable the LRESET_N de-bounce.
0	Reserved	-	-	Reserved.

Fintek Confidential
Do Not Copy!

9. Electron Characteristic

9.1 Absolute Maximum Ratings

PARAMETER	RATING	UNIT
Power Supply Voltage	-0.5 to 5.5	V
Input Voltage	-0.5 to VDD+0.5	V
Operating Temperature	0 to 70	° C
Storage Temperature	-55 to 150	° C

Note: Exposure to conditions beyond those listed under Absolute Maximum Ratings may adversely affect the life and reliability of the device

9.2 DC Characteristics

(T_A = 0° C to 70° C, VDD = 3.3V ± 10%, VSS = 0V)

Parameter	Conditions	MIN	TYP	MAX	Unit
Temperature Error, Remote Diode	60 °C < T_D < 145 °C, VCC = 3.0V to 3.6V 0 °C <T_D < 60°C 100 °C <T_D < 145°C		± 1 ± 1	± 3 ± 3	°C
Supply Voltage range		3.0	3.3	3.6	V
Average operating supply current			10		mA
Standby supply current			5		uA
Resolution			1		°C
Power on reset threshold			2.2	2.4	V
Diode source current	High Level		95		uA
	Low Level		10		uA

9.3 DC Characteristics Continued

(Ta = 0° C to 70° C, VDD = 3.3V ± 10%, VSS = 0V)

PARAMETER	SYM.	MIN.	TYP.	MAX.	UNIT	CONDITIONS
I/OD_{12ts5v}-TTL level bi-directional pin with schmitt trigger, Open-drain output with12 mA sink capability, 5V tolerance.						
Input Low Voltage	VIL			0.8	V	
Input High Voltage	VIH	2.0			V	
Output Low Current	IOL		+12		mA	VOL = 0.4V
Input High Leakage	ILIH			+1	μA	VIN = VDD
Input Low Leakage	ILIL	-1			μA	VIN = 0V
I/OD_{16t5v}-TTL level bi-directional pin, Open-drain output with16 mA sink capability, 5V tolerance.						
Input Low Voltage	VIL			0.8	V	
Input High Voltage	VIH	2.0			V	
Output Low Current	IOL		+16		mA	VOL = 0.4V
Input High Leakage	ILIH			+1	μA	VIN = VDD
Input Low Leakage	ILIL	-1			μA	VIN = 0V
I/OOD_{12t}-TTL level bi-directional pin, Output pin with 12mA source-sink capability, and can programming to open-drain function.						
Input Low Threshold Voltage	Vt-			0.8	V	VDD = 3.3 V
Input High Threshold Voltage	Vt+	2.0			V	VDD = 3.3 V
Output Low Current	IOL		-12	-9	mA	VOL = 0.4 V

Fintek Confidential
Do Not Copy

Output High Current	IOH	+9	+12		mA	VOH = 2.4V
Input High Leakage	ILIH			+1	μA	VIN = VDD
Input Low Leakage	ILIL	-1			μA	VIN = 0V
I/O_{12t}- TTL level bi-directional pin, Output pin with 12mA source-sink capability.						
Input Low Threshold Voltage	Vt-			0.6	V	VDD = 3.3 V
Input High Threshold Voltage	Vt+	0.9			V	VDD = 3.3 V
Output High Current	IOH	+9	+12		mA	VOH = 2.4V
Input High Leakage	ILIH			+1	μA	VIN = 1.2V
Input Low Leakage	ILIL	-1			μA	VIN = 0V
IN_{ts} - TTL level input pin with schmitt trigger						
Input Low Voltage	VIL			0.8	V	
Input High Voltage	VIH	2.0			V	
Input High Leakage	ILIH			+1	μA	VIN = VDD
Input Low Leakage	ILIL	-1			μA	VIN = 0 V
IN_{t5v} - TTL level input pin with 5V tolerance.						
Input Low Voltage	VIL			0.8	V	
Input High Voltage	VIH	2.0			V	
Input High Leakage	ILIH			+1	μA	VIN = VDD
Input Low Leakage	ILIL	-1			μA	VIN = 0 V
IN_{ts5v} - TTL level input pin with schmitt trigger, 5V tolerance.						
Input Low Voltage	VIL			0.8	V	
Input High Voltage	VIH	2.0			V	
Input High Leakage	ILIH			+1	μA	VIN = VDD
Input Low Leakage	ILIL	-1			μA	VIN = 0 V
OD_{12}-Open-drain output with12 mA sink capability.						
Output Low Current	IOL		-12		mA	VOL = 0.4V
OD_{12-5v}-Open-drain output with12 mA sink capability, 5V tolerance.						
Output Low Current	IOL		-12		mA	VOL = 0.4V
OD_{24}-Open-drain output with 24 mA sink capability.						
Output Low Current	IOL		-24		mA	VOL = 0.4V
$OD_{16-u10-5v}$-Open-drain output with 16 mA sink capability, pull-up 10k ohms, 5V tolerance.						
Output Low Current	IOL		-16		mA	VOL = 0.4V
O_8- Output pin with 8 mA source-sink capability.						
Output High Current	IOH	+6	+8		mA	VOH = 2.4V
$O_{8-u47-5v}$- Output pin with 8 mA source-sink capability, pull-up 47k ohms, 5V tolerance.						
Output High Current	IOH	+6	+8		mA	VOH = 2.4V
O_{12}- Output pin with 12 mA source-sink capability.						
Output High Current	IOH	+9	+12		mA	VOH = 2.4V
O_{30}- Output pin with 30 mA source-sink capability.						
Output High Current	IOH	+26	+30		mA	VOH = 2.4V

Fintek Confidential
Do Not Copy!

10. Ordering Information

Part Number	Package Type	Production Flow
F71882FG	128-PQFP Green Package	Commercial, 0°C to +70°C

11.Package Dimensions

128 PQFP

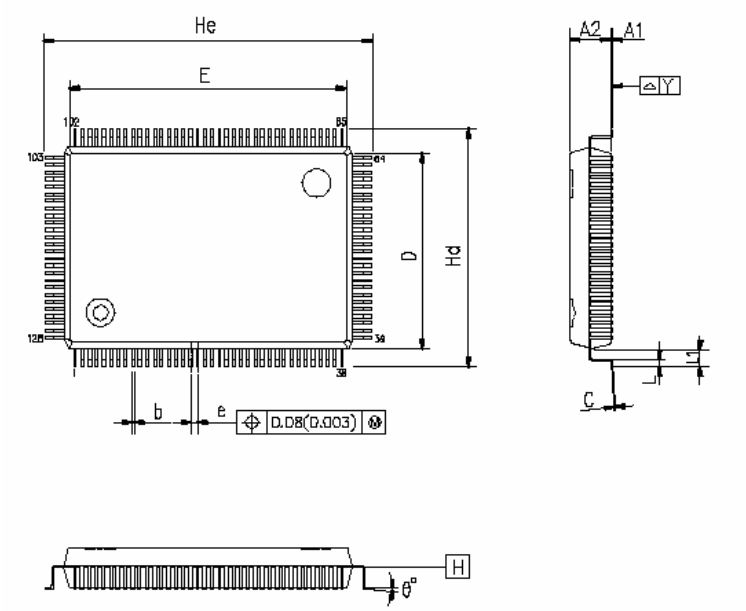

SYMBOLS	MIN.	NOM.	MAX.
A1	0.25	0.35	0.45
A2	2.57	2.72	2.87
b	0.10	0.20	0.30
C	0.10	0.15	0.20
D	13.90	14.00	14.10
E	19.90	20.00	20.10
e	–	0.50	–
Hd	17.00	17.20	17.40
He	23.00	23.20	23.40
L	0.65	0.80	0.95
L1	–	1.60	–
Y	–	–	0.08
θ°	0	–	12

UNIT : mm

NOTES:

1.JEDEC OUTLINE:N/A

2.DATUM PLANE H IS LOCATED AT THE BOTTOM OF THE MOLD PARTING LINE COINCIDENT WITH WHERE THE LEAD EXITS THE BODY.

3.DIMENSIONS E AND D DO NOT INCLUDE MOLD PROTRUSION. ALLOWABLE PROTRUSION IS 0.25 mm PER SIDE. DIMENSIONS E AND E DO INCLUDE MOLD MISMATCH AND ARE DETERMINED AT DATUM PLANE H.

4.DIMENSION b DOES NOT INCLUDE DAMBAR PROTRUSION .

Confidential
Not Copy

Feature Integration Technology Inc.

Headquarters
3F-7, No 36, Tai Yuan St.,
Chupei City, Hsinchu, Taiwan 302, R.O.C.
TEL : 886-3-5600168
FAX : 886-3-5600166
www: http://www.fintek.com.tw

Taipei Office
Bldg. K4, 7F, No.700, Chung Cheng Rd.,
Chungho City, Taipei, Taiwan 235, R.O.C.
TEL : 866-2-8227-8027
FAX : 866-2-8227-8037

Please note that all datasheet and specifications are subject to change without notice. All the trade marks of products and companies mentioned in this datasheet belong to their respective owner

12. Application Circuit

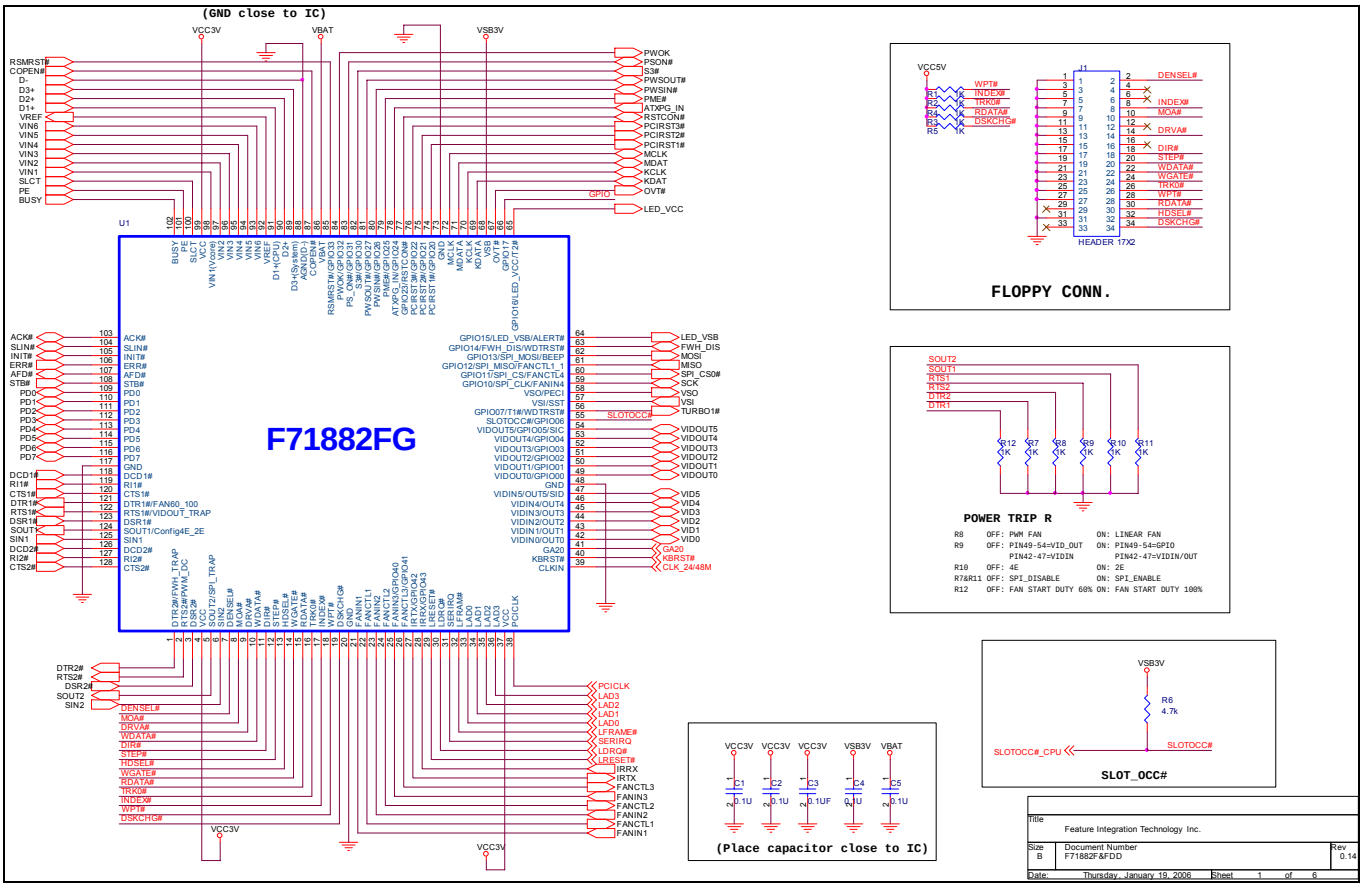

F71882

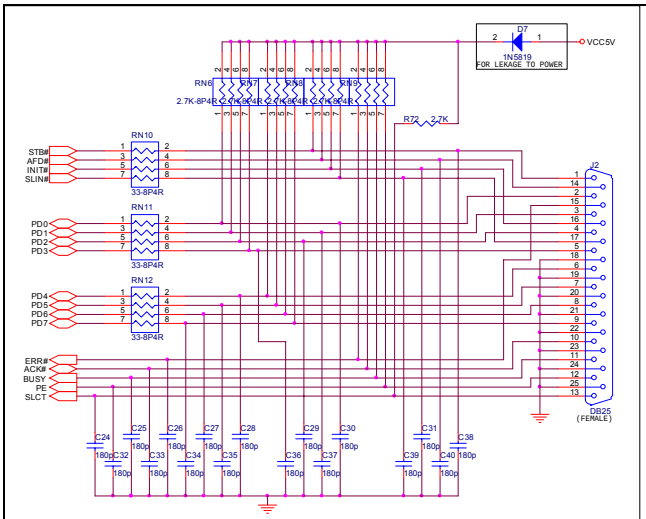

PARALLEL PORT INTERFACE

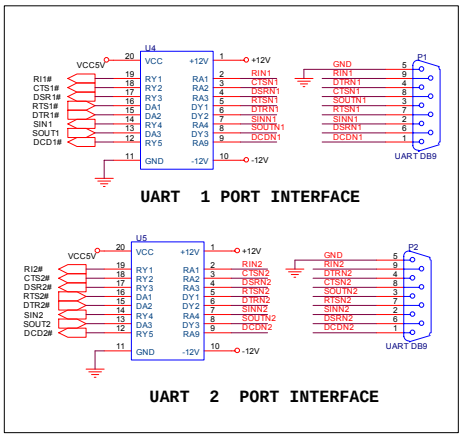

UART 1 PORT INTERFACE

UART 2 PORT INTERFACE

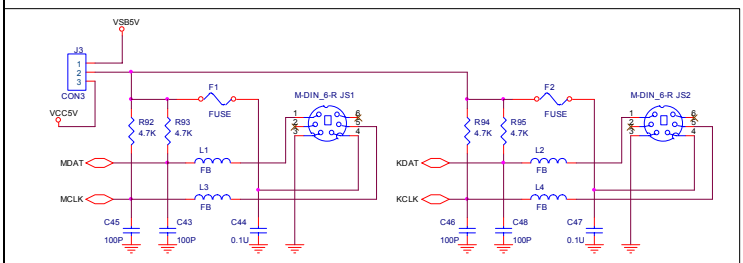

PS2 MOUSE INTERFACE

PS2 KEYBOARD INTERFACE

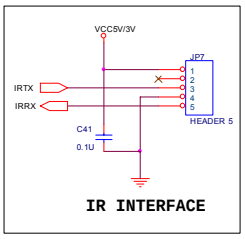

IR INTERFACE

Title	Feature Integration Technology Inc.
Size B	Document Number Printer &UART
Rev	0.14
Date: Thursday, January 19, 2006	Sheet 2 of 6

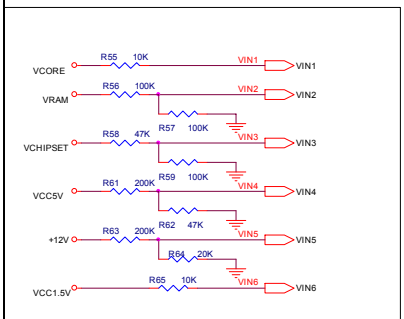

VOLTAGE SENSING.
The best voltage input level is about 1V.

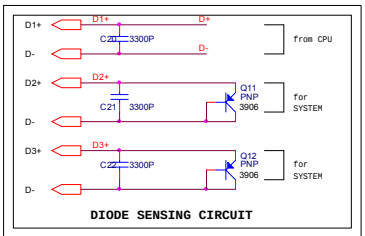

DIODE SENSING CIRCUIT

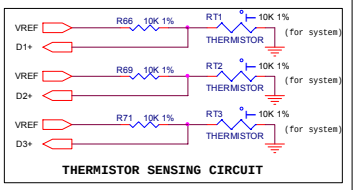

THERMISTOR SENSING CIRCUIT

Temperature Sensing

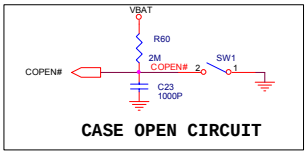

CASE OPEN CIRCUIT

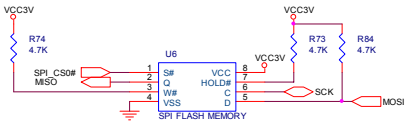

Title	Feature Integration Technology Inc
Size B	Document Number Hardware Monitor, SPI Flash
Rev	0.14
Date: Thursday, January 19, 2006	Sheet 3 of 6

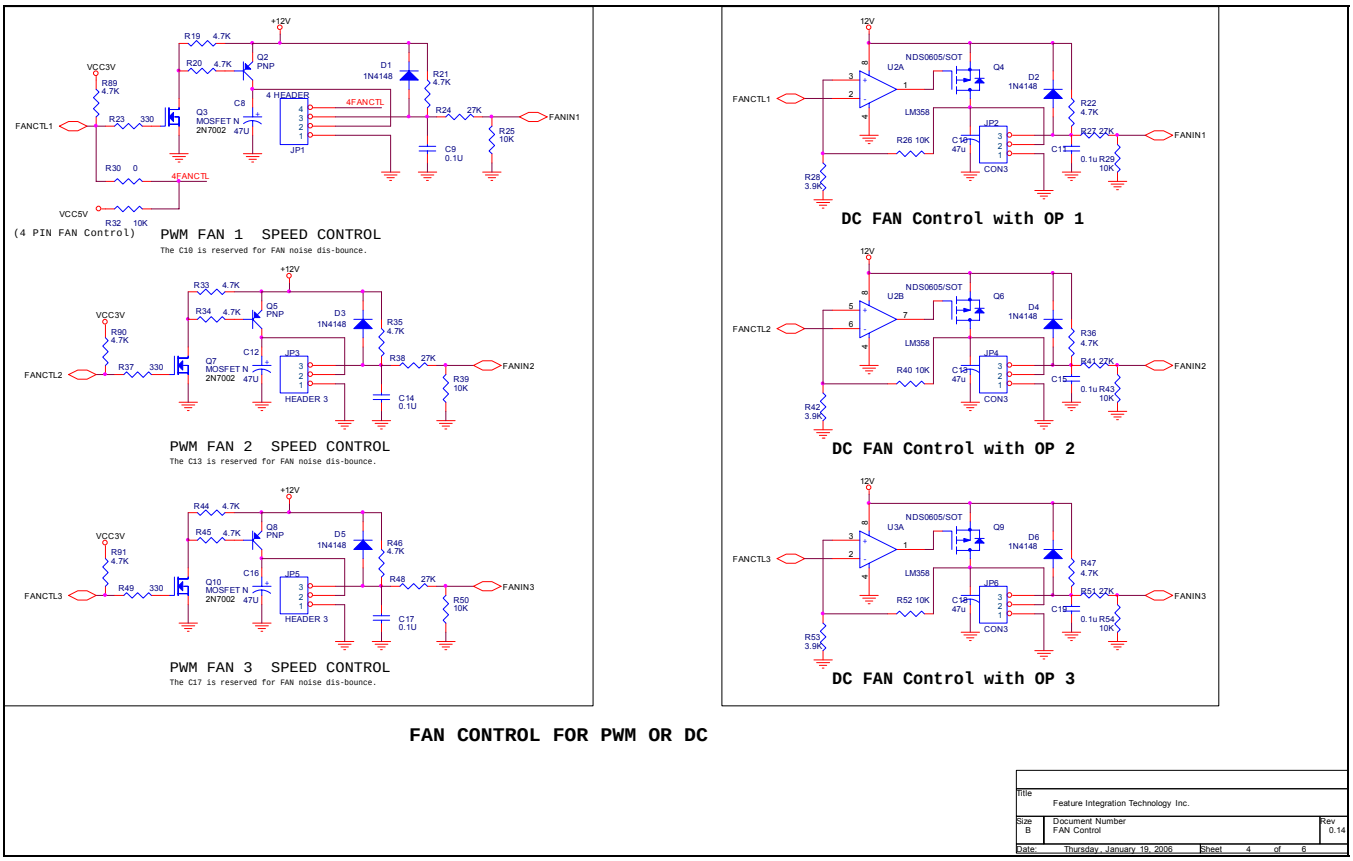
PWM FAN 1 SPEED CONTROL
The C10 is reserved for FAN noise dis-bounce.
(4 PIN FAN Control)
PWM FAN 2 SPEED CONTROL
The C13 is reserved for FAN noise dis-bounce.
PWM FAN 3 SPEED CONTROL
The C17 is reserved for FAN noise dis-bounce.
DC FAN Control with OP 1
DC FAN Control with OP 2
DC FAN Control with OP 3
FAN CONTROL FOR PWM OR DC
Feature Integration Technology Inc.
FAN Control

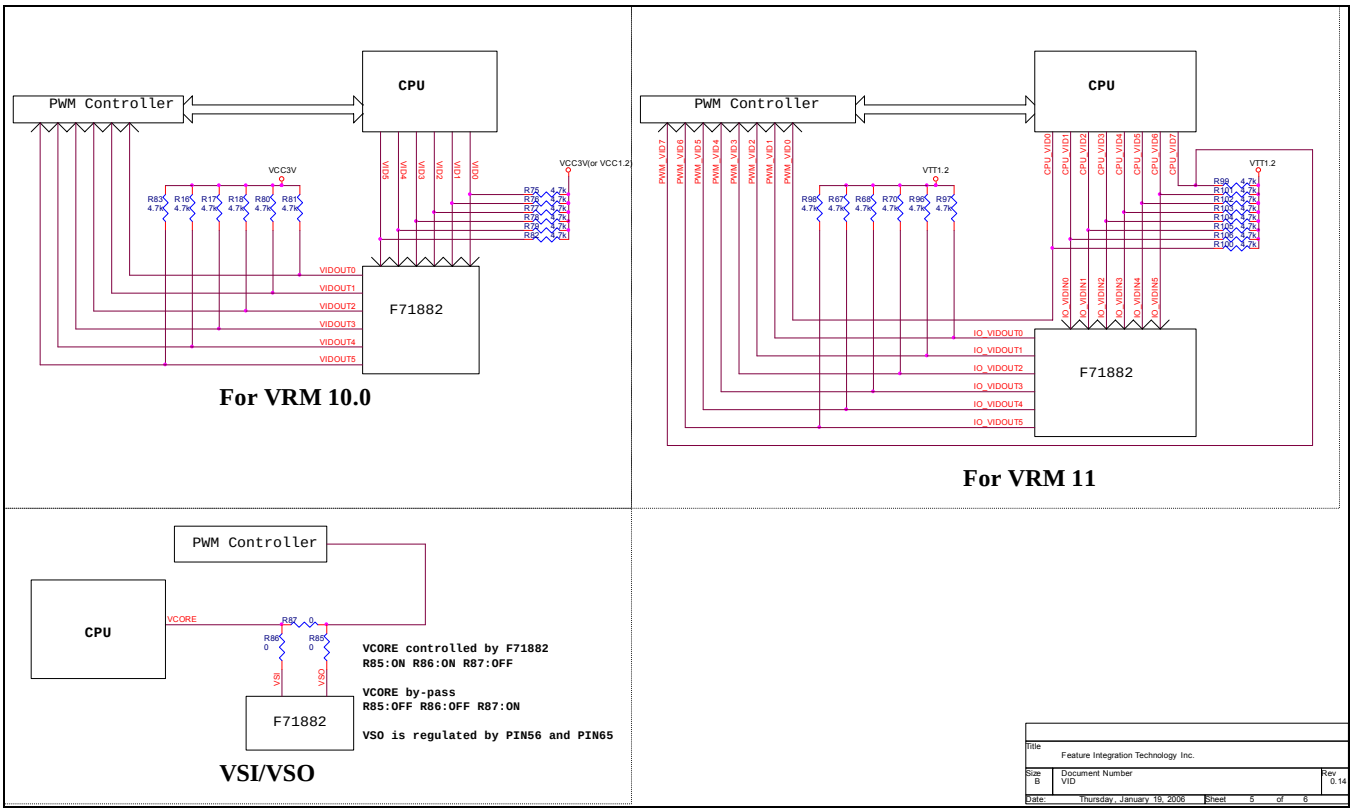
PWM Controller
CPU
F71882
For VRM 10.0
For VRM 11
VSI/VSO
VCORE controlled by F71882
R85:ON R86:ON R87:OFF
VCORE by-pass
R85:OFF R86:OFF R87:ON
VSO is regulated by PIN56 and PIN65
Feature Integration Technology Inc.
VID

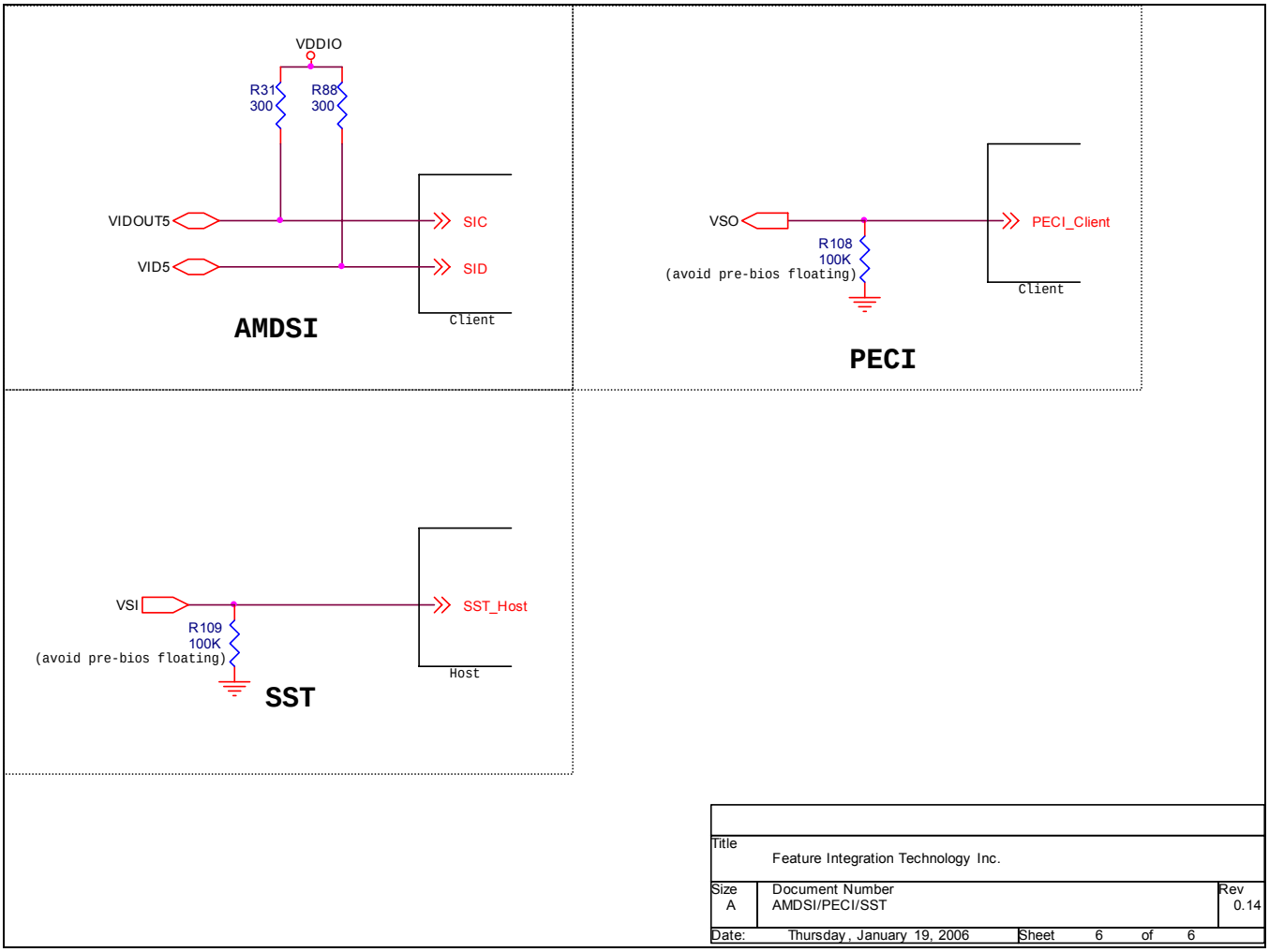
VDDIO
R31
300
R88
300
VIDOUT5
VID5
SIC
SID
Client
AMDSI
VSO
R108
100K
(avoid pre-bios floating)
PECI_Client
Client
PECI
VSI
R109
100K
(avoid pre-bios floating)
SST_Host
Host
SST
Title
Feature Integration Technology Inc.
Size
A
Document Number
AMDSI/PECI/SST
Rev
0.14
Date:
Thursday, January 19, 2006
Sheet
6
of
6