121 x 139 x 122,6 mm

582CAX

ETRI®

AC Centrifugal Blowers

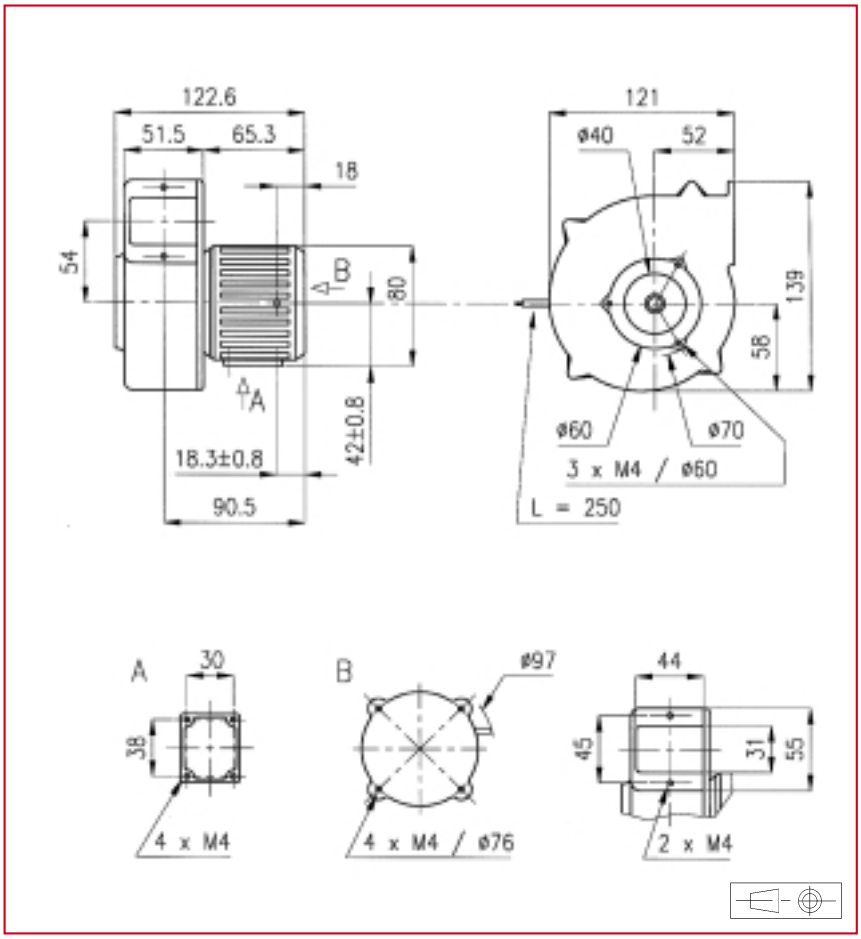

Approvals

GAM T1 LISTED

Life expectancy

L-10 LIFE AT 40°C:
25 000 hours

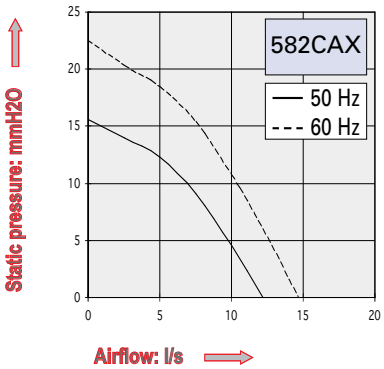

AC motor
Housing material: aluminium
Wheel material: aluminium
Weight: 1,77 kg
Bearing system: ball bearing

Connection: flying leads

Available with:
- safety switch

Part number	Nominal voltage	Airflow	Noise level	Nominal speed	Frequency	Phases	Capacitor *(not included)*	Input power	Nominal current	Starting current	Operating temperature	
	V	l/s	dB(A)	RPM	Hz		µF	W	mA	mA	Min. °C	Max. °C
582CAX016DC13	220	12	48	2900	50	3		9	70	240	- 10	70
	380	12	48	2900	50	3		9	45	140	- 10	70
	220	14,5	51	3400	60	3		9	55	220	- 10	70
	380	14,5	51	3400	60	3		9	35	130	- 10	70
	220	12	48	2900	50	1	0,47	9,5	80	210	- 10	70
	380	12	48	2900	50	1	0,15	9,5	50	120	- 10	70
	220	14,5	51	3400	60	1	0,47	9	60	195	- 10	70
	380	14,5	51	3400	60	1	0,15	9	35	115	- 10	70

Additional versions:
Salt spray protected - shock and vibration protected - marine specifications - wide temperature range

Accessories:
See pages: 157, 160 and 163

Non contractual document. Specifications are subject to change without prior notice. Pictures for information only. Edition 2016.