# Power MOSFET

| PRODUCT SUMMARY | | |
|---|---|---|
| $V_{DS}$ (V) | 650 | |
| $R_{DS(on)}$ (Ω) | $V_{GS}$ = 10 V | 1.8 |
| $Q_g$ (Max.) (nC) | 48 | |
| $Q_{gs}$ (nC) | 12 | |
| $Q_{gd}$ (nC) | 19 | |
| Configuration | Single | |

## FEATURES

- Low Gate Charge $Q_g$ Results in Simple Drive Requirement
- Improved Gate, Avalanche and Dynamic dV/dt Ruggedness
- Fully Characterized Capacitance and Avalanche Voltage and Current
- Compliant to RoHS directive 2002/95/EC

Pb Available

RoHS* COMPLIANT

TO-252

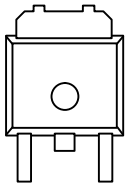


Top View

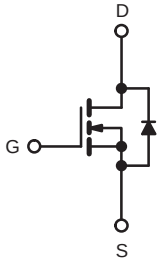


N-Channel MOSFET

| ABSOLUTE MAXIMUM RATINGS $T_C$ = 25 °C, unless otherwise noted | | | | | |
|---|---|---|---|---|---|
| PARAMETER | | | SYMBOL | LIMIT | UNIT |
| Drain-Source Voltage | | | $V_{DS}$ | 650 | V |
| Gate-Source Voltage | | | $V_{GS}$ | ± 30 | |
| Continuous Drain Current[e] | $V_{GS}$ at 10 V | $T_C$ = 25 °C | $I_D$ | 4.5 | A |
| Continuous Drain Current | | $T_C$ = 100 °C | | 4.2 | |
| Pulsed Drain Current[a] | | | $I_{DM}$ | 18 | |
| Linear Derating Factor | | | | 0.48 | W/°C |
| Single Pulse Avalanche Energy[b] | | | $E_{AS}$ | 325 | mJ |
| Repetitive Avalanche Current[a] | | | $I_{AR}$ | 4 | A |
| Repetitive Avalanche Energy[a] | | | $E_{AR}$ | 6 | mJ |
| Maximum Power Dissipation | $T_C$ = 25 °C | | $P_D$ | 60 | W |
| Peak Diode Recovery dV/dt[c] | | | dV/dt | 2.8 | V/ns |
| Operating Junction and Storage Temperature Range | | | $T_J$, $T_{stg}$ | - 55 to + 150 | °C |
| Soldering Recommendations (Peak Temperature)[d] | for 10 s | | | 300 | |
| Mounting Torque | 6-32 or M3 screw | | | 10 | lbf · in |
| | | | | 1.1 | N · m |

**Notes**

a. Repetitive rating; pulse width limited by maximum junction temperature (see fig. 11).
b. Starting $T_J$ = 25 °C, L = 24 mH, $R_G$ = 25 Ω, $I_{AS}$ = 3.2 A (see fig. 12).
c. $I_{SD} \leq$ 3.2 A, dI/dt $\leq$ 90 A/μs, $V_{DD} \leq V_{DS}$, $T_J \leq$ 150 °C.
d. 1.6 mm from case.
e. Drain current limited by maximum junction temperature.



Download from alldatasheet.com

| THERMAL RESISTANCE RATINGS | | | | |
|---|---|---|---|---|
| **PARAMETER** | **SYMBOL** | **TYP.** | **MAX.** | **UNIT** |
| Maximum Junction-to-Ambient | $R_{thJA}$ | - | 65 | °C/W |
| Maximum Junction-to-Case (Drain) | $R_{thJC}$ | - | 2.1 | |

| SPECIFICATIONS $T_J$ = 25 °C, unless otherwise noted | | | | | | | |
|---|---|---|---|---|---|---|---|
| **PARAMETER** | **SYMBOL** | **TEST CONDITIONS** | | **MIN.** | **TYP.** | **MAX.** | **UNIT** |
| **Static** | | | | | | | |
| Drain-Source Breakdown Voltage | $V_{DS}$ | $V_{GS}$ = 0 V, $I_D$ = 250 µA | | 650 | - | - | V |
| $V_{DS}$ Temperature Coefficient | $\Delta V_{DS}/T_J$ | Reference to 25 °C, $I_D$ = 1 mA[d] | | - | 670 | - | mV/°C |
| Gate-Source Threshold Voltage | $V_{GS(th)}$ | $V_{DS}$ = $V_{GS}$, $I_D$ = 250 µA | | 2.5 | - | 5.0 | V |
| Gate-Source Leakage | $I_{GSS}$ | $V_{GS}$ = ± 30 V | | - | - | ± 100 | nA |
| Zero Gate Voltage Drain Current | $I_{DSS}$ | $V_{DS}$ = 650 V, $V_{GS}$ = 0 V | | - | - | 25 | µA |
| | | $V_{DS}$ = 520 V, $V_{GS}$ = 0 V, $T_J$ = 125 °C | | - | - | 250 | |
| Drain-Source On-State Resistance | $R_{DS(on)}$ | $V_{GS}$ = 10 V | $I_D$ = 3.1 A[b] | - | - | 2.1 | Ω |
| Forward Transconductance | $g_{fs}$ | $V_{DS}$ = 50 V, $I_D$ = 3.1 A | | 3.9 | - | - | S |
| **Dynamic** | | | | | | | |
| Input Capacitance | $C_{iss}$ | $V_{GS}$ = 0 V, $V_{DS}$ = 25 V, f = 1.0 MHz, see fig. 5 | | - | 1417 | - | pF |
| Output Capacitance | $C_{oss}$ | | | - | 177 | - | |
| Reverse Transfer Capacitance | $C_{rss}$ | | | - | 7.0 | - | |
| Output Capacitance | $C_{oss}$ | $V_{GS}$ = 0 V | $V_{DS}$ = 1.0 V, f = 1.0 MHz | - | 1912 | - | |
| | | | $V_{DS}$ = 520 V, f = 1.0 MHz | - | 48 | - | |
| Effective Output Capacitance | $C_{oss}$ eff. | | $V_{DS}$ = 0 V to 520 V[c] | - | 84 | - | |
| Total Gate Charge | $Q_g$ | $V_{GS}$ = 10 V | $I_D$ = 3.2 A, $V_{DS}$ = 400 V see fig. 6 and 13[b] | - | - | 48 | nC |
| Gate-Source Charge | $Q_{gs}$ | | | - | - | 12 | |
| Gate-Drain Charge | $Q_{gd}$ | | | - | - | 19 | |
| Turn-On Delay Time | $t_{d(on)}$ | $V_{DD}$ = 325 V, $I_D$ = 3.2 A $R_G$ = 9.1 Ω, $R_D$ = 62 Ω, see fig. 10[b] | | - | 14 | - | ns |
| Rise Time | $t_r$ | | | - | 20 | - | |
| Turn-Off Delay Time | $t_{d(off)}$ | | | - | 34 | - | |
| Fall Time | $t_f$ | | | - | 18 | - | |
| **Drain-Source Body Diode Characteristics** | | | | | | | |
| Continuous Source-Drain Diode Current | $I_S$ | MOSFET symbol showing the integral reverse p - n junction diode | | - | - | 4 | A |
| Pulsed Diode Forward Current[a] | $I_{SM}$ | | | - | - | 21 | |
| Body Diode Voltage | $V_{SD}$ | $T_J$ = 25 °C, $I_S$ = 3.2 A, $V_{GS}$ = 0 V[b] | | - | - | 1.5 | V |
| Body Diode Reverse Recovery Time | $t_{rr}$ | $T_J$ = 25 °C, $I_F$ = 3.2 A, dI/dt = 100 A/µs[b] | | - | 493 | 739 | ns |
| Body Diode Reverse Recovery Charge | $Q_{rr}$ | | | - | 2.1 | 3.2 | µC |
| Forward Turn-On Time | $t_{on}$ | Intrinsic turn-on time is negligible (turn-on is dominated by $L_S$ and $L_D$) | | | | | |

**Notes**

a. Repetitive rating; pulse width limited by maximum junction temperature (see fig. 11).
b. Pulse width ≤ 300 µs; duty cycle ≤ 2 %.
c. $C_{oss}$ eff. is a fixed capacitance that gives the same charging time as $C_{oss}$ while $V_{DS}$ is rising from 0 % to 80 % $V_{DS}$.
d. t = 60 s, f = 60 Hz.



Download from alldatasheet.com

**TYPICAL CHARACTERISTICS** 25 °C, unless otherwise noted

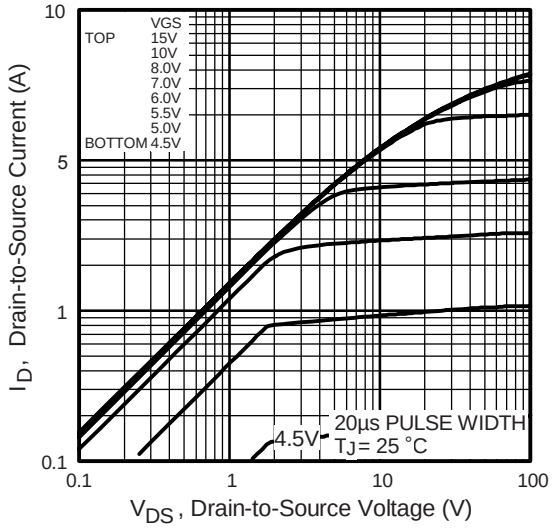


**Fig. 1 - Typical Output Characteristics**

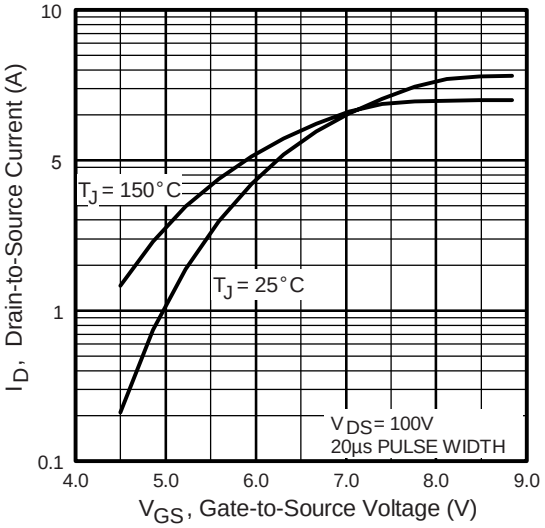


**Fig. 3 - Typical Transfer Characteristics**

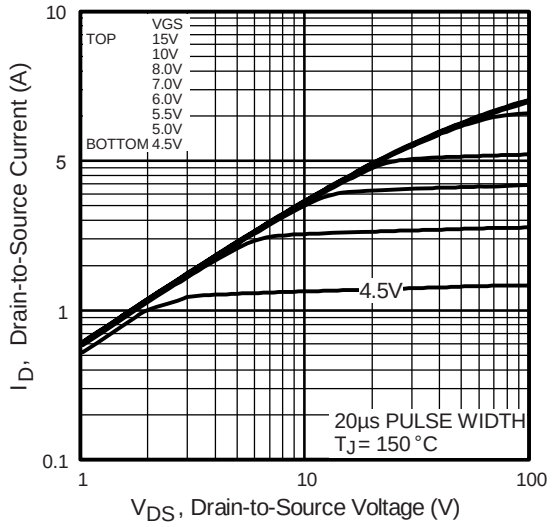


**Fig. 2 - Typical Output Characteristics**

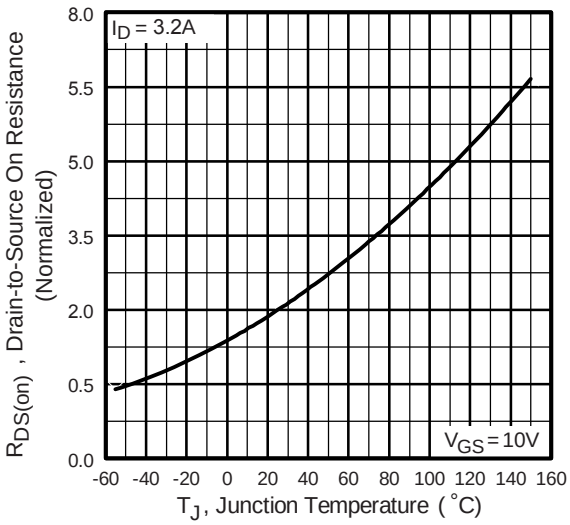


**Fig. 4 - Normalized On-Resistance vs. Temperature**



Download from alldatasheet.com

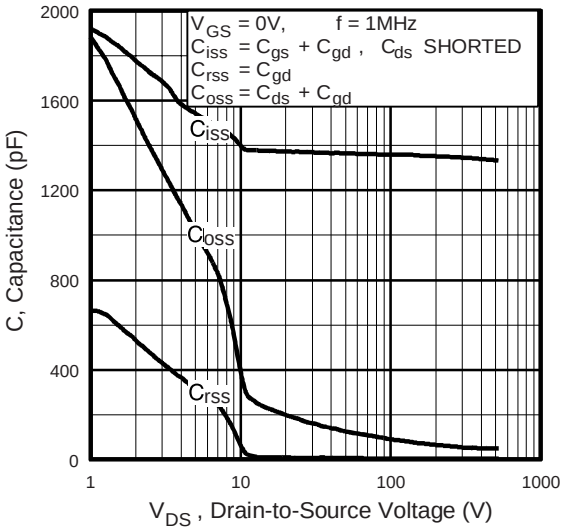


**Fig. 5 - Typical Capacitance vs. Drain-to-Source Voltage**

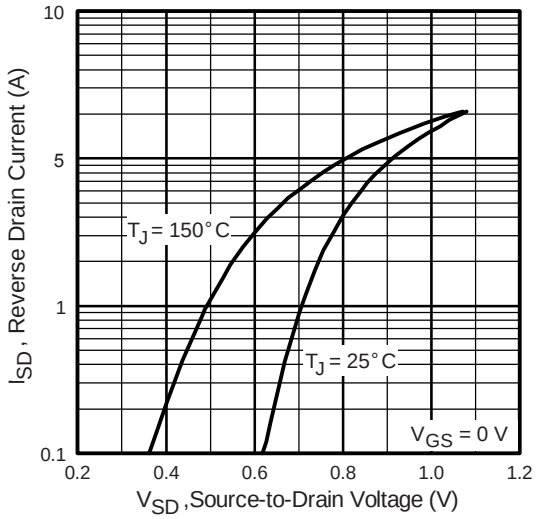


**Fig. 7 - Typical Source-Drain Diode Forward Voltage**

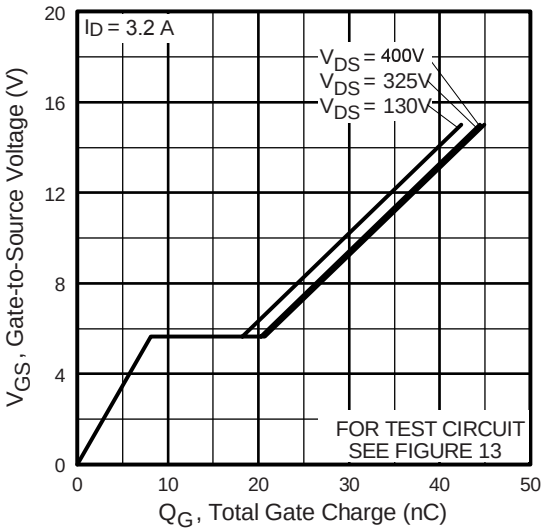


**Fig. 6 - Typical Gate Charge vs. Gate-to-Source Voltage**

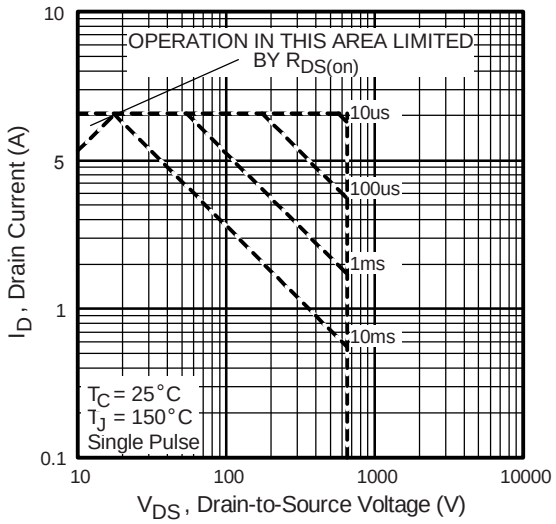


**Fig. 8 - Maximum Safe Operating Area**



Download from alldatasheet.com

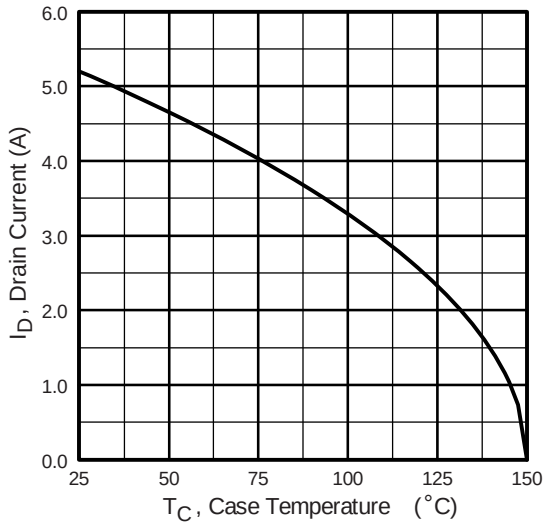


**Fig. 9 - Maximum Drain Current vs. Case Temperature**

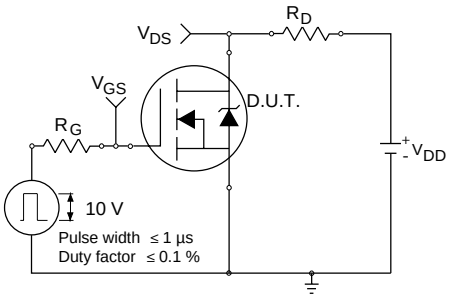


**Fig. 10a - Switching Time Test Circuit**

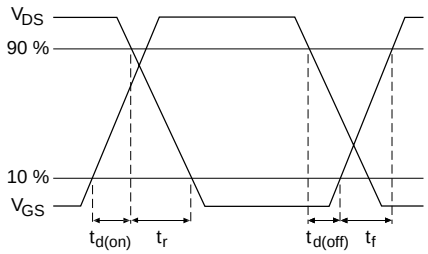


**Fig. 10b - Switching Time Waveforms**

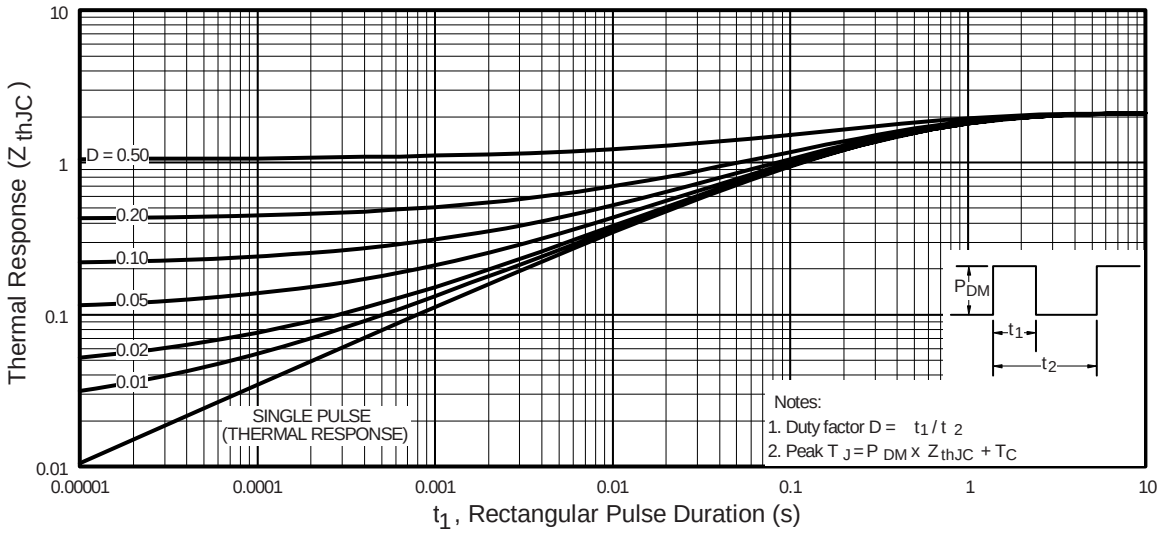


**Fig. 11 - Maximum Effective Transient Thermal Impedance, Junction-to-Case**

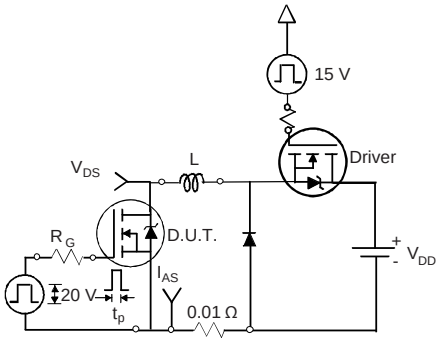


**Fig. 12a - Unclamped Inductive Test Circuit**

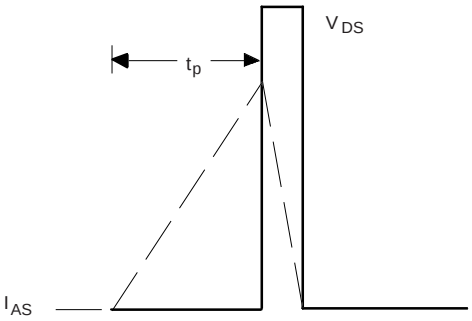


**Fig. 12b - Unclamped Inductive Waveforms**


E-mail: China@VBsemi TEL:86-755-83251052
Download from alldatasheet.com

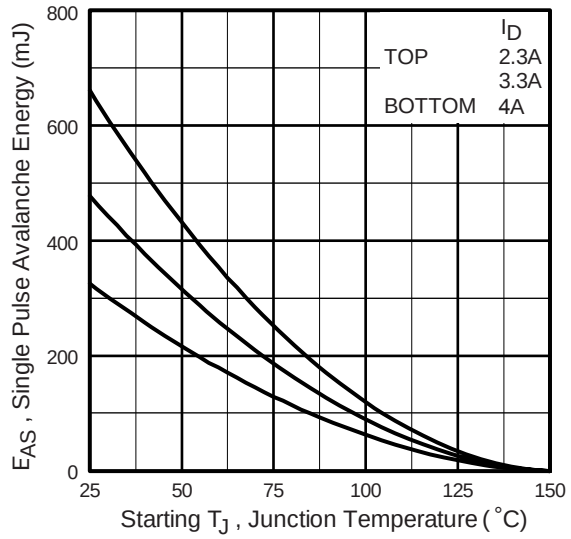


**Fig. 12c - Maximum Avalanche Energy vs. Drain Current**

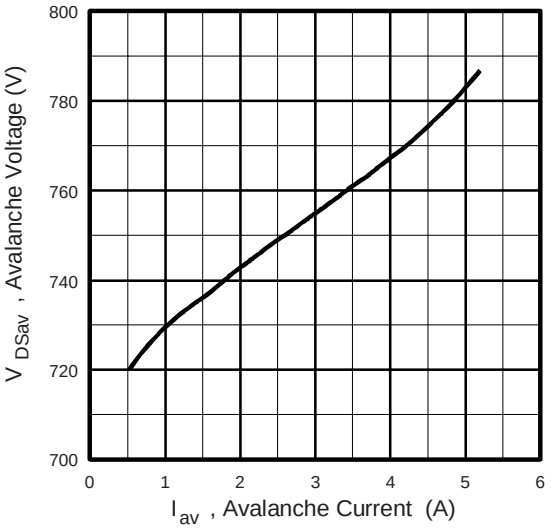


**Fig. 12d - Typical Drain-to Source Voltage vs. Avalanche Current**

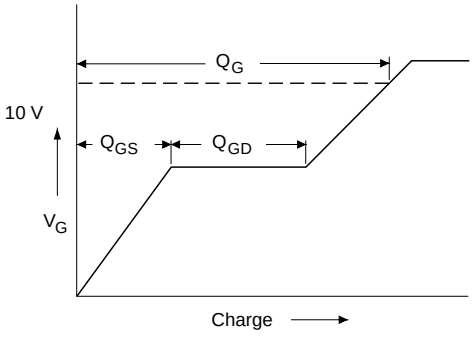


**Fig. 13a - Basic Gate Charge Waveform**

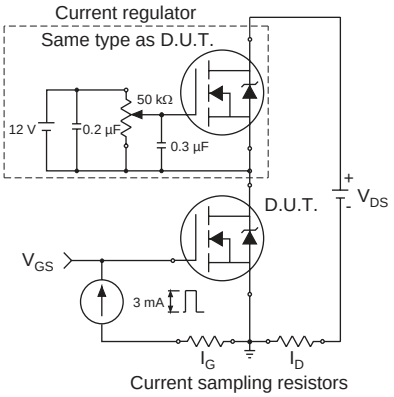


**Fig. 13b - Gate Charge Test Circuit**



Download from alldatasheet.com

## Peak Diode Recovery dV/dt Test Circuit

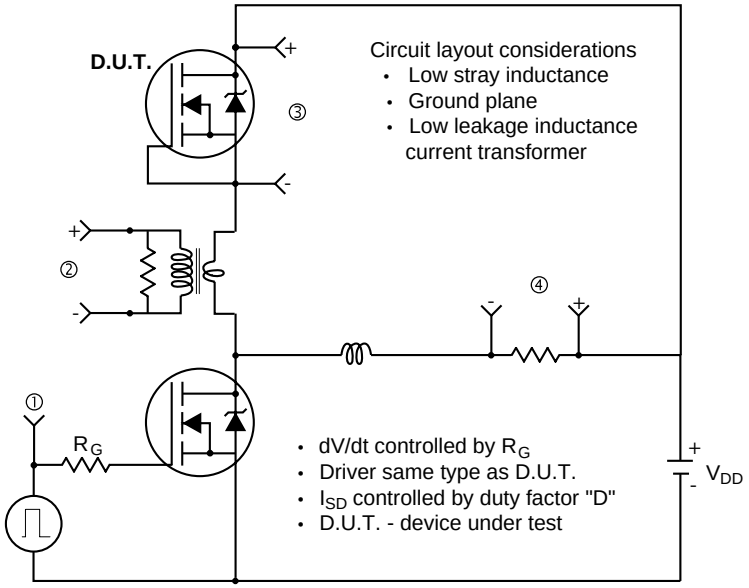


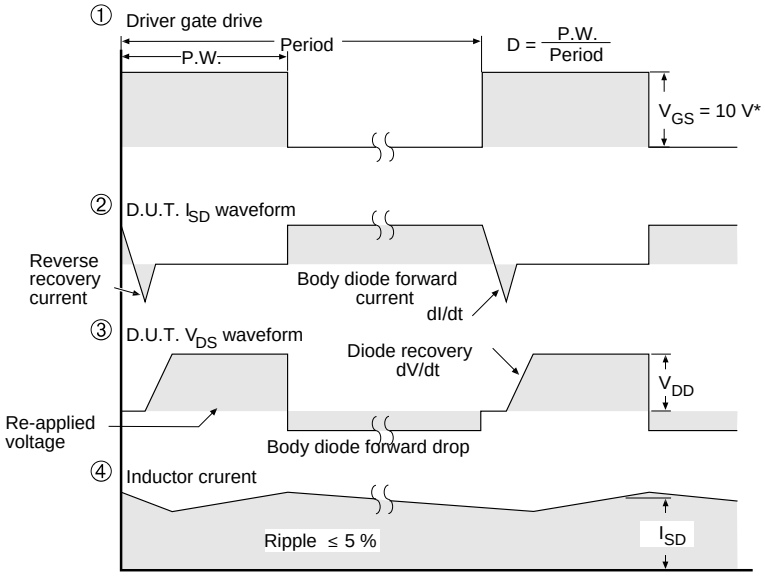


* $V_{GS}$ = 5 V for logic level devices

**Fig. 14 - For N-Channel**



Download from alldatasheet.com

# TO-252AA CASE OUTLINE

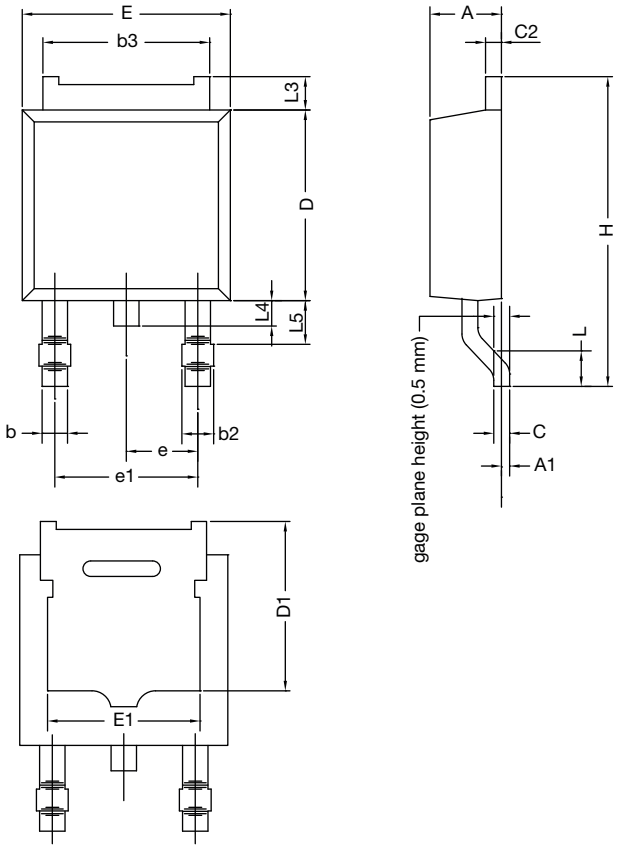


| | MILLIMETERS | | INCHES | |
|---|---|---|---|---|
| DIM. | MIN. | MAX. | MIN. | MAX. |
| A | 2.18 | 2.38 | 0.086 | 0.094 |
| A1 | - | 0.127 | - | 0.005 |
| b | 0.64 | 0.88 | 0.025 | 0.035 |
| b2 | 0.76 | 1.14 | 0.030 | 0.045 |
| b3 | 4.95 | 5.46 | 0.195 | 0.215 |
| C | 0.46 | 0.61 | 0.018 | 0.024 |
| C2 | 0.46 | 0.89 | 0.018 | 0.035 |
| D | 5.97 | 6.22 | 0.235 | 0.245 |
| D1 | 5.21 | - | 0.205 | - |
| E | 6.35 | 6.73 | 0.250 | 0.265 |
| E1 | 4.32 | - | 0.170 | - |
| H | 9.40 | 10.41 | 0.370 | 0.410 |
| e | 2.28 BSC | | 0.090 BSC | |
| e1 | 4.56 BSC | | 0.180 BSC | |
| L | 1.40 | 1.78 | 0.055 | 0.070 |
| L3 | 0.89 | 1.27 | 0.035 | 0.050 |
| L4 | - | 1.02 | - | 0.040 |
| L5 | 1.14 | 1.52 | 0.045 | 0.060 |
| ECN: X12-0247-Rev. M, 24-Dec-12<br>DWG: 5347 | | | | |

**Note**

- Dimension L3 is for reference only.



Download from alldatasheet.com