- ***Ideal for 441.20 MHz Transmitters***
- ***Very Low Insertion Loss***
- ***Quartz Stability***
- ***Rugged, Hermetic, Low Profile F-11 Package***

SR441B

Absolute Maximum Rating (Ta=25°C)			
Parameter		Rating	Unit
CW RF Power Dissipation	P	0	dBm
DC Voltage	V_{DC}	±30	V
Operating Temperature Range	T_A	-10 ~ +60	°C
Storage Temperature Range	T_{stg}	-40 ~ +85	°C

Electronic Characteristics						
Parameter		Sym	Minimum	Typical	Maximum	Unit
Frequency (25°C)	Nominal Frequency	f_C	NS	441.20	NS	MHz
	Tolerance from 441.20 MHz	Δf_C	-	-	± 75	KHz
Insertion Loss		IL	-	2.8	3.3	dB
Quality Factor	Unloaded Q-Value	Q_U	-	12,350	-	-
	50Ω Loaded Q-Value	Q_L	-	3,400	-	-
Temperature Stability	Turnover Temperature	T_O	25	-	55	°C
	Turnover Frequency	f_O	-	fc	-	KHz
	Frequency Temperature Coefficient	FTC	-	-0.032	-	ppm/°C^2
Frequency Aging	Absolute Value during the First Year	$\|f_A\|$	-	-	10	ppm/yr
DC Insulation Resistance Between any Two Pins		-	1.0	-	-	MΩ
RF Equivalent RLC Model	Motional Resistance	R_M	-	38.0	46.0	Ω
	Motional Inductance	L_M	-	169.3413	-	μH
	Motional Capacitance	C_M	-	0.7692	-	fF
	Pin 1 to Pin 2 Static Capacitance	C_O	0.85	1.15	1.45	pF

NS = Not Specified

Notes:

1. The center frequency, f_C, is measured at the minimum IL point with the resonator in the 50Ω test system.
2. Unless noted otherwise, case temperature T_C = +25°C ± 2°C.
3. Frequency aging is the change in f_C with time and is specified at +65°C or less. Aging may exceed the specification for prolonged temperatures above +65°C. Typically, aging is greatest the first year after manufacture, decreasing in subsequent years.
4. Turnover temperature, T_0, is the temperature of maximum (or turnover) frequency, f_0. The nominal frequency at any case temperature, T_C, may be calculated from: $f = f_0 [1 - FTC (T_0 - T_C)^2]$.
5. This equivalent RLC model approximates resonator performance near the resonant frequency and is provided for reference only. The capacitance C_0 is the measured static (nonmotional) capacitance between Pin1 and Pin2. The measurement includes case parasitic capacitance.
6. Derived mathematically from one or more of the following directly measured parameters: f_C, IL, 3 dB bandwidth, f_C versus T_C, and C_0.
7. The specifications of this device are based on the test circuit shown above and subject to change or obsolescence without notice.
8. Typically, equipment utilizing this device requires emissions testing and government approval, which is the responsibility of the equipment manufacturer.
9. Our liability is only assumed for the Surface Acoustic Wave (SAW) component(s) per se, not for applications, processes and circuits implemented within components or assemblies.
10. For questions on technology, prices and delivery please contact our sales offices or e-mail to sales@vanlong.com.

Phone: +86 10 6301 4184 Fax: +86 10 6301 9167 Email: sales@vanlong.com Web: http://www.vanlong.com

© 2004 by Vanlong Technology Co., Ltd.

Package Dimensions (F-11)

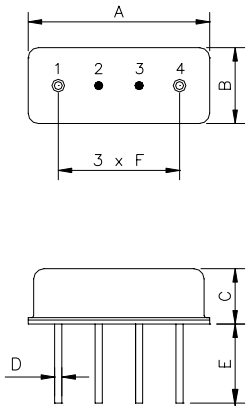

Electrical Connections

Terminals	Connection
1	Input/Output
2	Case Ground
3	Case Ground
4	Output/Input

Package Dimensions

Dimensions	Nom. (mm)	Tol. (mm)
A	11.0	±0.3
B	4.5	±0.3
C	3.2	±0.3
D	0.45	±0.1
E	5.0	±0.5
F	2.54	±0.2

Marking

SR441B

Ink Marking
Color: Black or Blue

Equivalent LC Model and Test Circuit

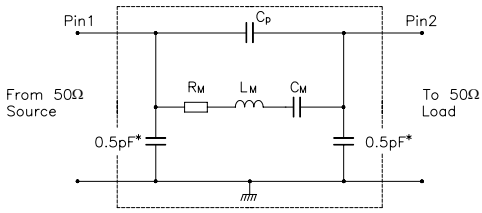

Typical Application Circuit

Low Power Transmitter Application

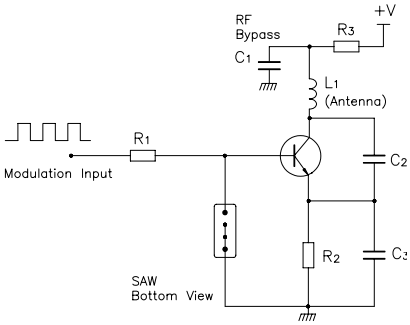

Local Oscillator Application

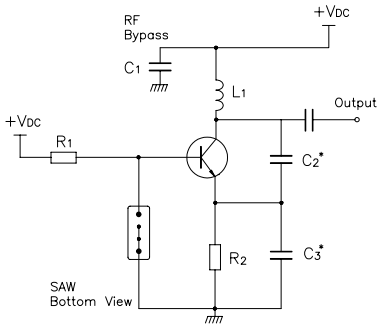

Typical Frequency Response

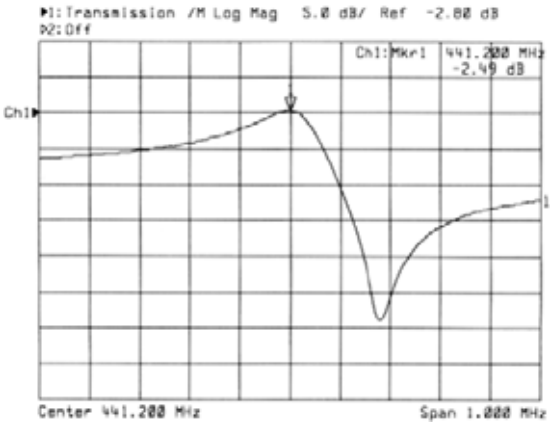

Temperature Characteristics

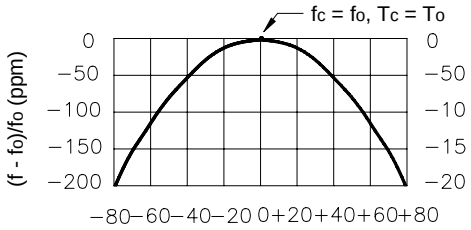

ΔT= Tc –To (°C)

The curve shown above accounts for resonator contribution only and does not include oscillator temperature characteristics.

© 2004 by Vanlong Technology Co., Ltd.