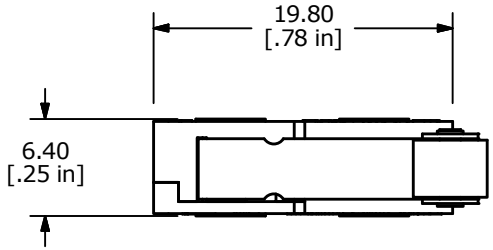

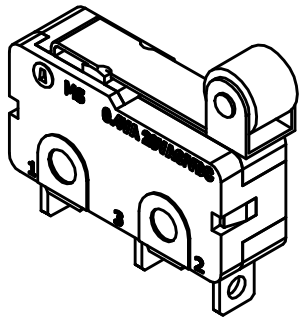

O.P. (MM)	P.T. (MM)
14.9 ± 1.0	4.0 MAX

O.P. = OPERATING POINT
P.T. = PRE-TRAVEL

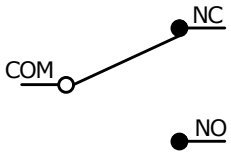

CIRCUIT: SPDT

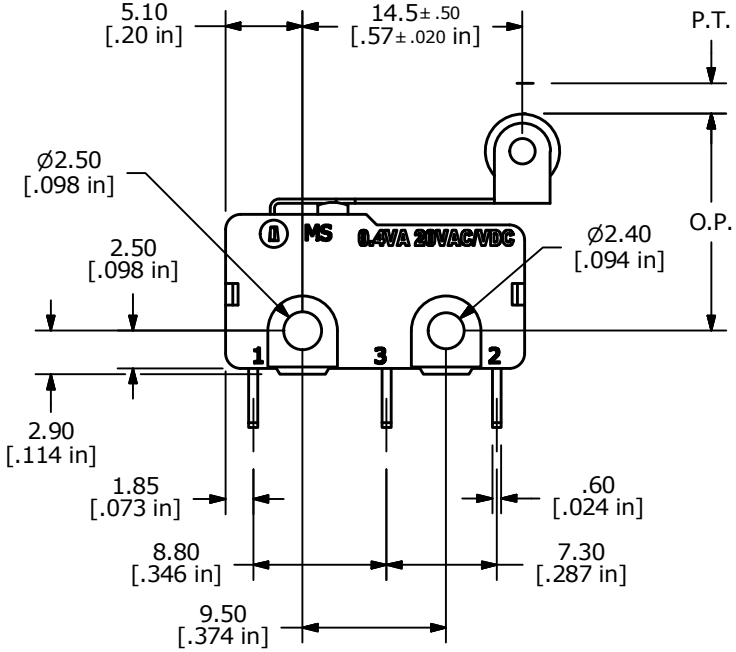

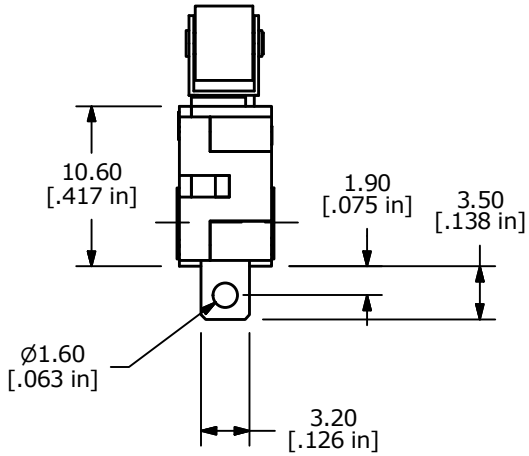

NOTES:
1. ALL DIMENSIONS IN MM [INCH]
2. GENERAL TOLERANCE: X.X = ± 0.4
   X.XX = ± 0.25
3. RATING: 0.4VA @20VAC OR DC
▲ 4. OPERATING FORCE: 75 ± 25 GRAMS
5. OPERATING TEMP: -25˚C TO 85˚C
6. ELECTRICAL LIFE: 50,000 CYCLES MIN.
7. MECHANICAL LIFE: 1,000,000 CYCLES TYP.
8. INSULATION RESISTANCE: 100 MEGA-OHMS
9. DIELECTRIC STRENGTH: 1000VAC 1 MINUTE (INITAL VALUE)
10. CONTACT RESISTANCE: 100 mΩ MAX.
▲ 11. CONTACTS: 10 MICRO INCHES MINIMUM GOLD PLATING (PN: Q990001)
12. ▲ DENOTES CRITICAL PARAMETER.
13. 2002/95/EC (ROHS) COMPLIANT

REV	PCR NO	DESCRIPTION	DATE	BY
A	22221	RELEASED FOR PRODUCTION	3/25/16	MW

THE INFORMATION CONTAINED IN THIS DOCUMENT IS PROPRIETARY TO E-SWITCH AND IS NOT TO BE COPIED OR TRANSFERRED

E-SWITCH®

TITLE MS085R105F075S1A

SCALE	DATE	DR	DWG	REV
2:1	3/25/2016	MW	Q970153	A