Power MOSFET

PRODUCT SUMMARY		
V_{DS} (V)	500	
$R_{DS(on)}$ (Ω)	V_{GS} = 10 V	0.85
Q_g (Max.) (nC)	39	
Q_{gs} (nC)	10	
Q_{gd} (nC)	19	
Configuration	Single	

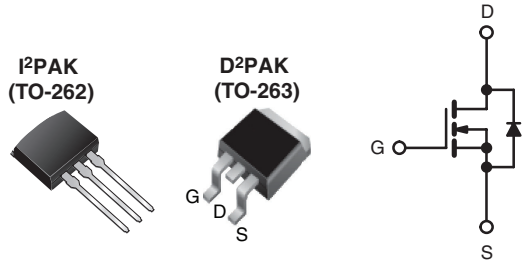

N-Channel MOSFET

FEATURES

- Ultra Low Gate Charge
- Reduced Gate Drive Requirement
- Enhanced 30 V V_{GS} Rating
- Reduced C_{iss}, C_{oss}, C_{rss}
- Extremely High Frequency Operation
- Repetitive Avalanche Rated
- Lead (Pb)-free Available

Pb Available

RoHS* COMPLIANT

DESCRIPTION

This new series of low charge Power MOSFETs achieve significantly lower gate charge then conventional Power MOSFETs. Utilizing the new LCDMOS (low charge device Power MOSFETs) technology, the device improvements are achieved without added product cost, allowing for reduced gate drive requirements and total system savings. In addition, reduced switching losses and improved efficiency are achievable in a variety of high frequency applications. Frequencies of a few MHz at high current are possible using the new low charge Power MOSFETs.

These device improvements combined with the proven ruggedness and reliability that characterize Power MOSFETs offer the designer a new power transistor standard for switching applications.

ORDERING INFORMATION			
Package	D²PAK (TO-263)	D²PAK (TO-263)	I²PAK (TO-262)
Lead (Pb)-free	IRF840LCSPbF	-	IRF840LCLPbF
	SiHF840LCS-E3	-	SiHF840LCL-E3
SnPb	IRF840LCS	IRF840LCSTRR[a]	IRF840LCL
	SiHF840LCS	SiHF840LCST[a]	SiHF840LCL

Note

a. See device orientation.

ABSOLUTE MAXIMUM RATINGS T_C = 25 °C, unless otherwise noted

PARAMETER			SYMBOL	LIMIT	UNIT
Drain-Source Voltage			V_{DS}	500	V
Gate-Source Voltage			V_{GS}	± 30	
Continuous Drain Current	V_{GS} at 10 V	T_C = 25 °C	I_D	8.0	A
		T_C = 100 °C		5.1	
Pulsed Drain Current[a, e]			I_{DM}	28	
Linear Derating Factor				1.0	W/°C
Single Pulse Avalanche Energy[b, e]			E_{AS}	510	mJ
Avalanche Current[a]			I_{AR}	8.0	A
Repetiitive Avalanche Energy[a]			E_{AR}	13	mJ
Maximum Power Dissipation	T_C = 25 °C		P_D	3.1	W
	T_A = 25 °C			125	
Peak Diode Recovery dV/dt[c, e]			dV/dt	3.5	V/ns
Operating Junction and Storage Temperature Range			T_J, T_{stg}	- 55 to + 150	°C
Soldering Recommendations (Peak Temperature)	for 10 s			300[d]	

Notes

a. Repetitive rating; pulse width limited by maximum junction temperature (see fig. 11).
b. Starting T_J = 25 °C, L = 14 mH, R_G = 25 Ω, I_{AS} = 8.0 A (see fig. 12).
c. $I_{SD} \leq$ 8.0 A, dI/dt $\leq$ 100 A/µs, $V_{DD} \leq V_{DS}$, $T_J \leq$ 150 °C.
d. 1.6 mm from case.
e. Uses IRF840LC/SiHF840LC data and test conditions.

* Pb containing terminations are not RoHS compliant, exemptions may apply

THERMAL RESISTANCE RATINGS				
PARAMETER	**SYMBOL**	**TYP.**	**MAX.**	**UNIT**
Maximum Junction-to-Ambient (PCB Mounted, steady-state)[a]	R_{thJA}	-	40	°C/W
Maximum Junction-to-Case (Drain)	R_{thJC}	-	1.0	

Note

a. When mounted on 1" square PCB (FR-4 or G-10 material).

SPECIFICATIONS T_J = 25 °C, unless otherwise noted							
PARAMETER	**SYMBOL**	**TEST CONDITIONS**		**MIN.**	**TYP.**	**MAX.**	**UNIT**
Static							
Drain-Source Breakdown Voltage	V_{DS}	V_{GS} = 0 V, I_D = 250 μA		500	-	-	V
V_{DS} Temperature Coefficient	$\Delta V_{DS}/T_J$	Reference to 25 °C, I_D = 1 mA[c]		-	0.63	-	V/°C
Gate-Source Threshold Voltage	$V_{GS(th)}$	V_{DS} = V_{GS}, I_D = 250 μA		2.0	-	4.0	V
Gate-Source Leakage	I_{GSS}	V_{GS} = ± 20 V		-	-	± 100	nA
Zero Gate Voltage Drain Current	I_{DSS}	V_{DS} = 500 V, V_{GS} = 0 V		-	-	25	μA
		V_{DS} = 400 V, V_{GS} = 0 V, T_J = 125 °C		-	-	250	
Drain-Source On-State Resistance	$R_{DS(on)}$	V_{GS} = 10 V	I_D = 4.8 A[b]	-	-	0.85	Ω
Forward Transconductance	g_{fs}	V_{DS} = 50 V, I_D = 4.8 A[b]		4.0	-	-	S
Dynamic							
Input Capacitance	C_{iss}	V_{GS} = 0 V, V_{DS} = 25 V, f = 1.0 MHz, see fig. 5[c]		-	1100	-	pF
Output Capacitance	C_{oss}			-	170	-	
Reverse Transfer Capacitance	C_{rss}			-	18	-	
Total Gate Charge	Q_g	V_{GS} = 10 V	I_D = 8.0 A, V_{DS} = 400 V, see fig. 6 and 13[b, c]	-	-	39	nC
Gate-Source Charge	Q_{gs}			-	-	10	
Gate-Drain Charge	Q_{gd}			-	-	19	
Turn-On Delay Time	$t_{d(on)}$	V_{DD} = 250 V, I_D = 8.0 A, R_G = 9.1 Ω, R_D = 30 Ω, see fig. 10[b, c]		-	12	-	ns
Rise Time	t_r			-	25	-	
Turn-Off Delay Time	$t_{d(off)}$			-	27	-	
Fall Time	t_f			-	19	-	
Drain-Source Body Diode Characteristics							
Continuous Source-Drain Diode Current	I_S	MOSFET symbol showing the integral reverse p - n junction diode		-	-	8.0	A
Pulsed Diode Forward Current[a]	I_{SM}			-	-	28	
Body Diode Voltage	V_{SD}	T_J = 25 °C, I_S = 8.0 A, V_{GS} = 0 V[b]		-	-	2.0	V
Body Diode Reverse Recovery Time	t_{rr}	T_J = 25 °C, I_F = 8.0 A, dI/dt = 100 A/μs[b, c]		-	490	740	ns
Body Diode Reverse Recovery Charge	Q_{rr}			-	3.0	4.5	μC
Forward Turn-On Time	t_{on}	Intrinsic turn-on time is negligible (turn-on is dominated by L_S and L_D)					

Notes

a. Repetitive rating; pulse width limited by maximum junction temperature (see fig. 11).
b. Pulse width ≤ 300 μs; duty cycle ≤ 2 %.
c. Uses SiHF840LC data and test conditions.

TYPICAL CHARACTERISTICS 25 °C, unless otherwise noted

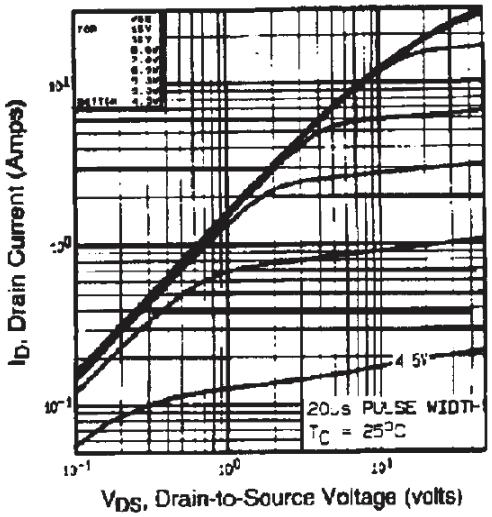

Fig. 1 - Typical Output Characteristics

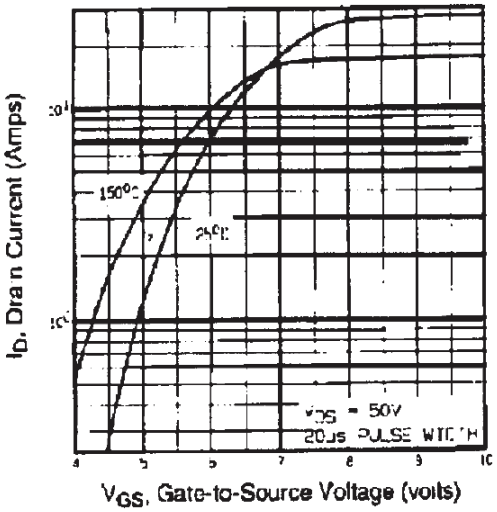

Fig. 3 - Typical Transfer Characteristics

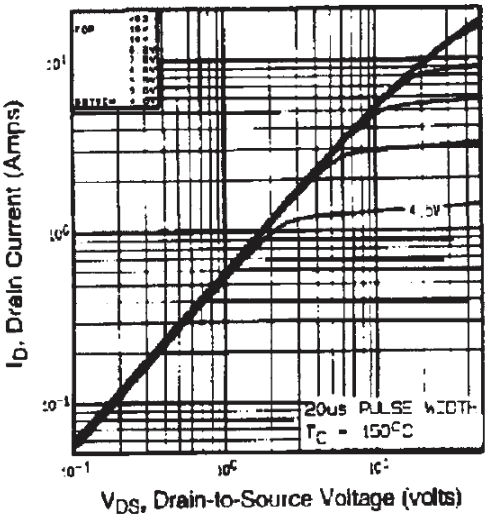

Fig. 2 - Typical Output Characteristics

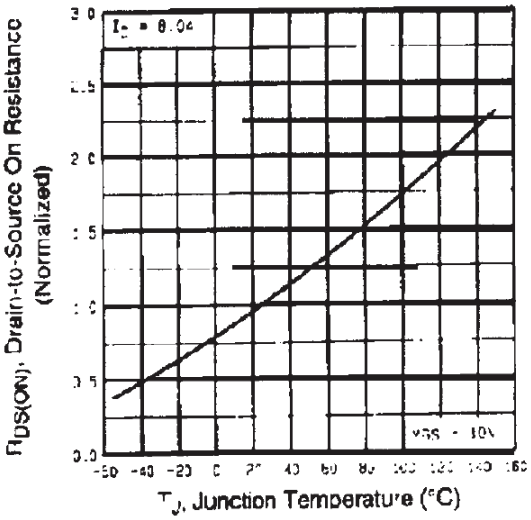

Fig. 4 - Normalized On-Resistance vs. Temperature

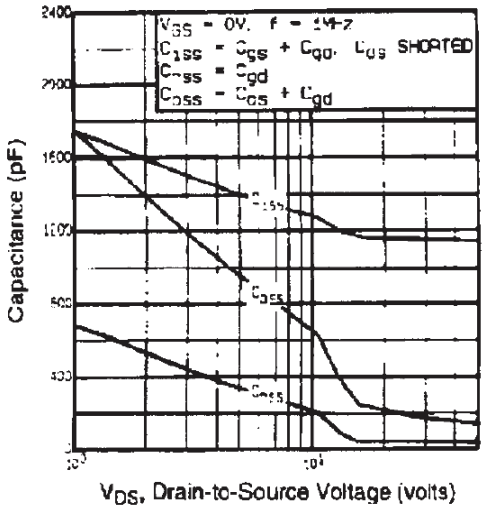

Fig. 5 - Typical Capacitance vs. Drain-to-Source Voltage

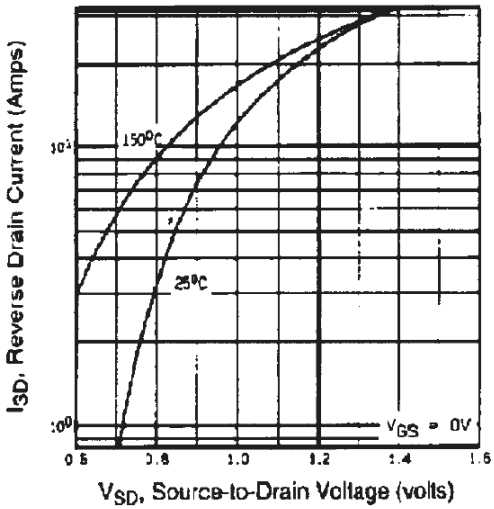

Fig. 7 - Typical Source-Drain Diode Forward Voltage

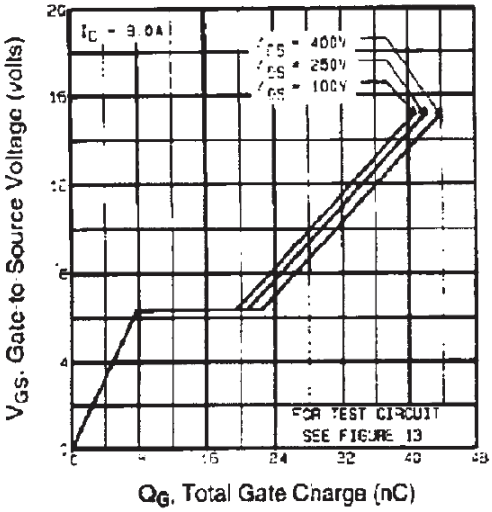

Fig. 6 - Typical Gate Charge vs. Gate-to-Source Voltage

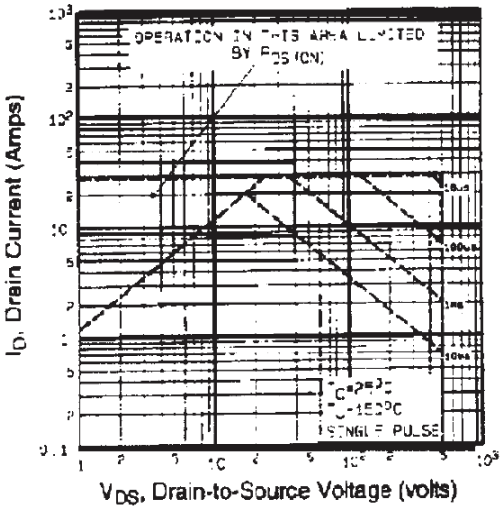

Fig. 8 - Maximum Safe Operating Area

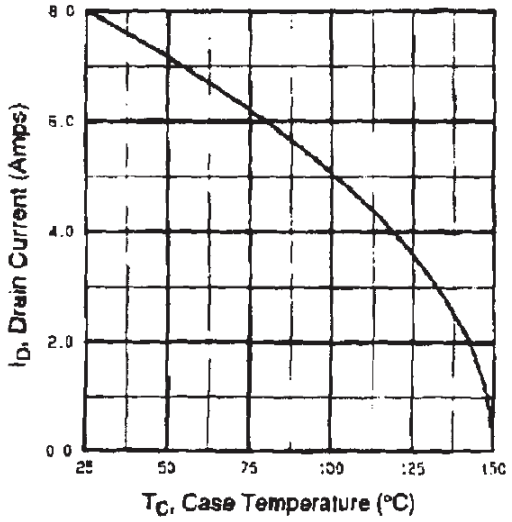

Fig. 9 - Maximum Drain Current vs. Case Temperature

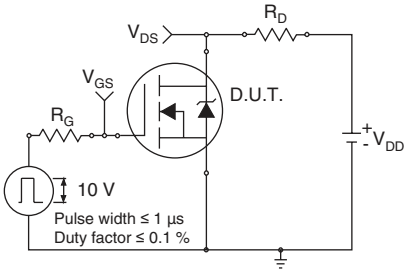

Fig. 10a - Switching Time Test Circuit

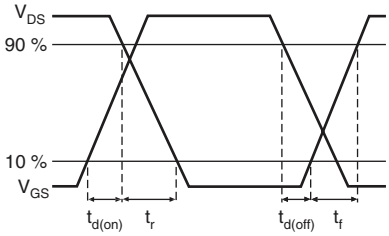

Fig. 10b - Switching Time Waveforms

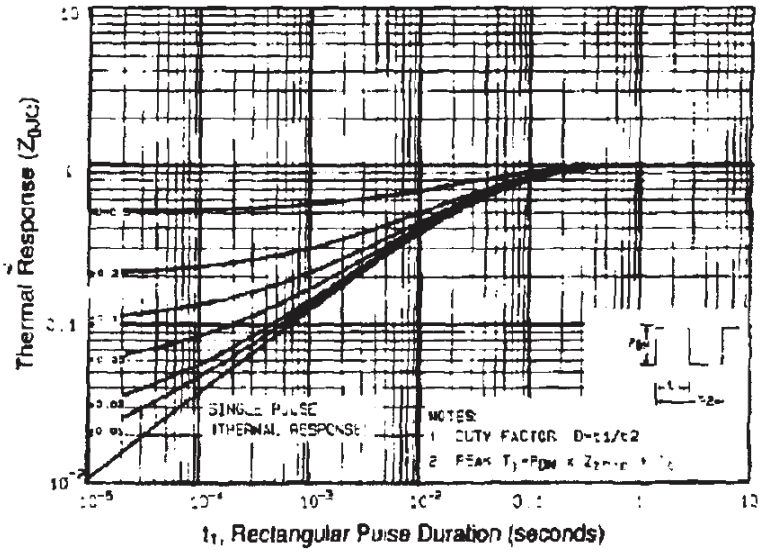

Fig. 11 - Maximum Effective Transient Thermal Impedance, Junction-to-Case

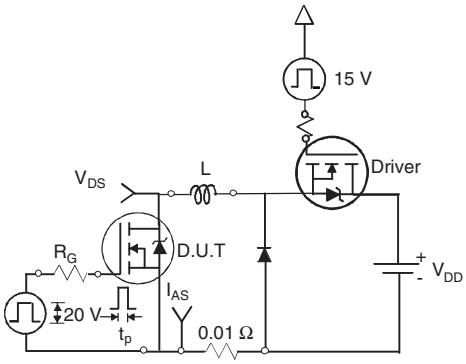

Fig. 12a - Unclamped Inductive Test Circuit

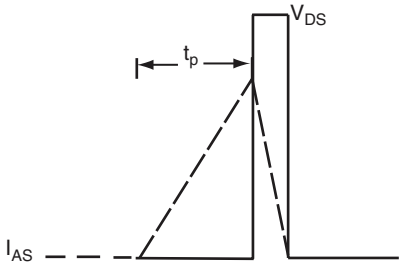

Fig. 12b - Unclamped Inductive Waveforms

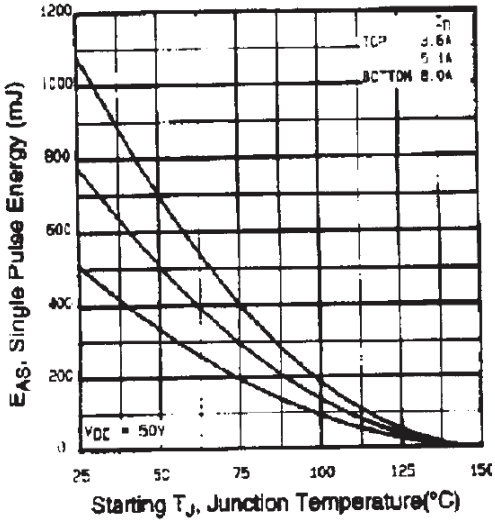

Fig. 12c - Maximum Avalanche Energy vs. Drain Current

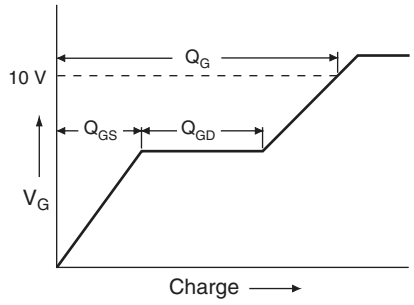

Fig. 13a - Basic Gate Charge Waveform

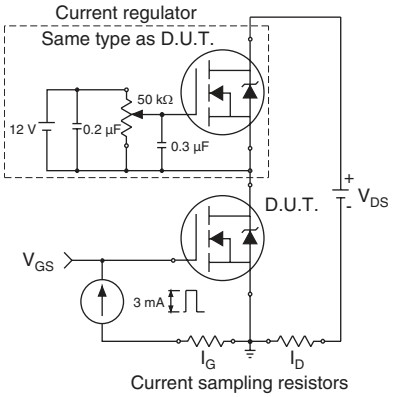

Fig. 13b - Gate Charge Test Circuit

Peak Diode Recovery dV/dt Test Circuit

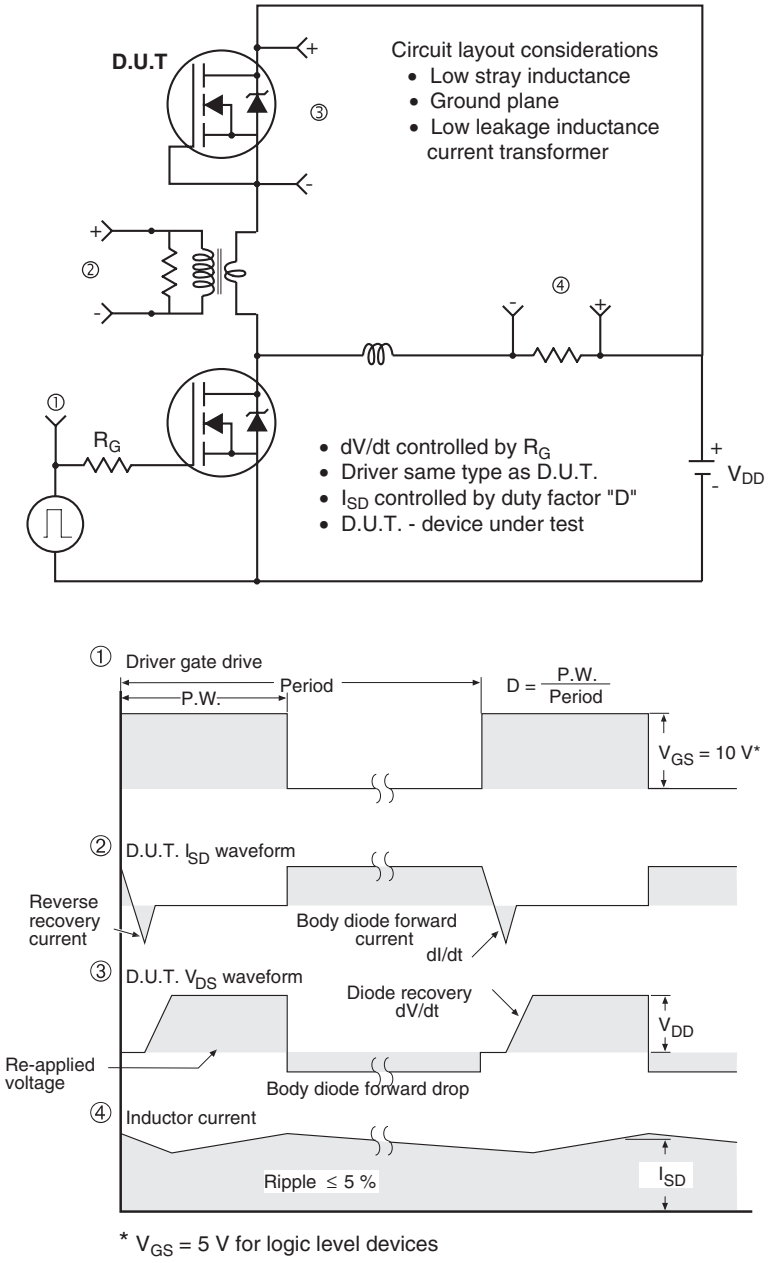

* V_{GS} = 5 V for logic level devices

Fig. 14 - For N-Channel

Vishay Siliconix maintains worldwide manufacturing capability. Products may be manufactured at one of several qualified locations. Reliability data for Silicon Technology and Package Reliability represent a composite of all qualified locations. For related documents such as package/tape drawings, part marking, and reliability data, see http://www.vishay.com/ppg?91068.

Disclaimer

All product specifications and data are subject to change without notice.

Vishay Intertechnology, Inc., its affiliates, agents, and employees, and all persons acting on its or their behalf (collectively, “Vishay”), disclaim any and all liability for any errors, inaccuracies or incompleteness contained herein or in any other disclosure relating to any product.

Vishay disclaims any and all liability arising out of the use or application of any product described herein or of any information provided herein to the maximum extent permitted by law. The product specifications do not expand or otherwise modify Vishay’s terms and conditions of purchase, including but not limited to the warranty expressed therein, which apply to these products.

No license, express or implied, by estoppel or otherwise, to any intellectual property rights is granted by this document or by any conduct of Vishay.

The products shown herein are not designed for use in medical, life-saving, or life-sustaining applications unless otherwise expressly indicated. Customers using or selling Vishay products not expressly indicated for use in such applications do so entirely at their own risk and agree to fully indemnify Vishay for any damages arising or resulting from such use or sale. Please contact authorized Vishay personnel to obtain written terms and conditions regarding products designed for such applications.

Product names and markings noted herein may be trademarks of their respective owners.