This document was generated on 05/25/2010

PLEASE CHECK WWW.MOLEX.COM FOR LATEST PART INFORMATION

Part Number: 0878321009
Status: Active
Overview: milligrid
Description: 2.00mm (.079") Pitch Milli-Grid™ Header, Surface Mount, Vertical, Shrouded, Lead-free, 10 Circuits, 0.76µm (30µ") Gold (Au) Plating, with Locking Window, Pick-and-Place Cap, PCB Locator, Tube

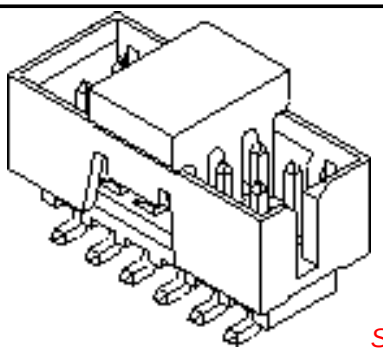

Series image - Reference only

Documents:

- 3D Model
- Drawing (PDF)
- Product Specification PS-87831-027 (PDF)
- RoHS Certificate of Compliance (PDF)

Agency Certification

CSA	LR19980
UL	E29179

General

Product Family	PCB Headers
Series	87832
Application	Wire-to-Board
Comments	With Cap|Contact Molex for application in automotive industry
Overview	milligrid
Product Name	Milli-Grid™

Physical

Breakaway	No
Circuits (Loaded)	10
Circuits (maximum)	10
Color - Resin	Black
First Mate / Last Break	No
Flammability	94V-0
Glow-Wire Compliant	No
Guide to Mating Part	No
Keying to Mating Part	Yes
Lock to Mating Part	Yes
Material - Metal	Phosphor Bronze
Material - Plating Mating	Gold
Material - Plating Termination	Tin
Material - Resin	Nylon
Number of Rows	2
Orientation	Vertical
PCB Locator	Yes
PCB Retention	None
Packaging Type	Tube
Pitch - Mating Interface (in)	0.079 In
Pitch - Mating Interface (mm)	2.00 mm
Pitch - Term. Interface (in)	0.079 In
Pitch - Term. Interface (mm)	2.00 mm
Plating min: Mating (µin)	30
Plating min: Mating (µm)	0.76
Plating min: Termination (µin)	75
Plating min: Termination (µm)	1.88
Polarized to Mating Part	Side Slots (2)
Polarized to PCB	No
Shrouded	Fully
Stackable	No

EU RoHS
ELV and RoHS Compliant
REACH SVHC
Contains SVHC: No
Halogen-Free Status
Not Halogen-Free

China RoHS

Need more information on product environmental compliance?

Email productcompliance@molex.com
For a multiple part number RoHS Certificate of Compliance, click here

Please visit the Contact Us section for any non-product compliance questions.

Search Parts in this Series
87832Series

Mates With
50394 Wire-to-Board Terminals. 51110 Wire-to-Board Crimp Housing. 87568 Wire-to-Board IDT Housings. 79107 Board-to-Board Top Entry Through Hole Receptacle. 79108 Board-to-Board FFC/FPC Top Entry Through Hole Receptacle. L

Temperature Range - Operating	-55°C to +105°C
Termination Interface: Style	Surface Mount

Electrical

Current - Maximum per Contact	2A
Voltage - Maximum	125V

Solder Process Data

Duration at Max. Process Temperature (seconds)	10
Lead-free Process Capability	Reflow Capable (SMT only)
Max. Cycles at Max. Process Temperature	1
Process Temperature max. C	260

Material Info

Reference - Drawing Numbers

Product Specification	PS-87831-027
Sales Drawing	SD-87832-011

This document was generated on 05/25/2010
PLEASE CHECK WWW.MOLEX.COM FOR LATEST PART INFORMATION

PEG OPTION	P/N WITH CAP IN TAPE & REEL	P/N WITH CAP IN TUBE	P/N WITHOUT CAP IN TUBE	CKT SIZE	DIMENSION				
					A	B	C	D	P
NO	87832-0407	87832-0409	87832-0411	4	2.00	4.85	6.65	5.00	-
YES	87832-0607	87832-0609	87832-0611	6	4.00	6.85	8.65	7.00	2.00
YES	87832-0807	87832-0809	87832-0811	8	6.00	8.85	10.65	9.00	4.00
YES	87832-1007	87832-1009	87832-1011	10	8.00	10.85	12.65	11.00	6.00
YES	87832-1207	87832-1209	87832-1211	12	10.00	12.85	14.65	13.00	8.00

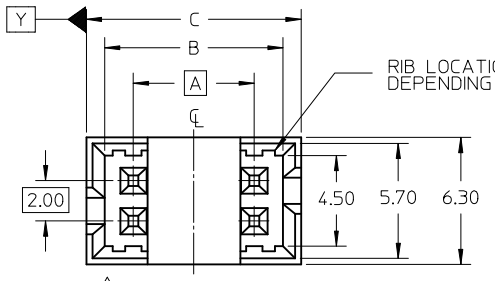

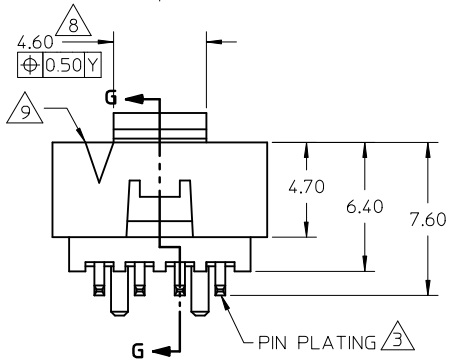

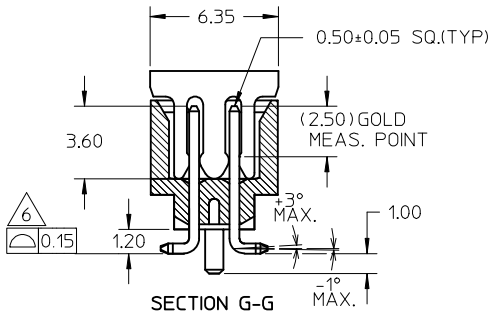

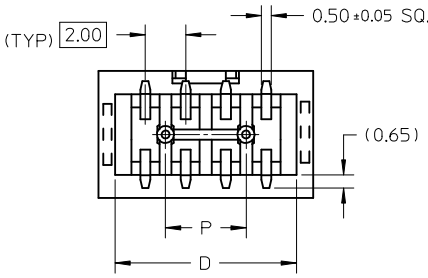

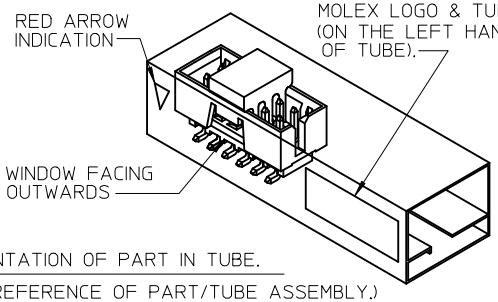

REF : ORIENTATION OF PART IN TUBE.
(FOR THE REFERENCE OF PART/TUBE ASSEMBLY.)

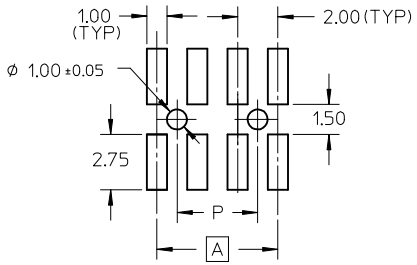

RECOMMENDED PCB PATTERN

NOTES:
1. FOR ILLUSTRATION PURPOSES, 8 CIRCUIT SIZE WAFER IS SHOWN.
2. MATERIAL :
   HOUSING & CAP : 30% G.F., NYLON 46, UL94V-0, COLOR BLACK.
   PIN : 0.50MM SQ.PHOSPHOR BRONZE.
3. PLATING :
   0.76um/30uin GOLD IN CONTACT AREA AND 1.88um/75uin MIN.TIN IN SOLDER TAIL AREA OVER 1.27um/50uin MIN. NICKEL OVERALL.
4. PIN PUSHOUT FORCE : 0.91 KG MIN. IN EITHER DIRECTION.
5. PRODUCT SPECIFICATION PS-87831-027 APPLIES.
6. COPLANARITY IS TO BE MEASURED BY RESTING THE SOLDER TAIL ON A GAUGE SURFACE.
7. BEND DEPRESSION ON SMT TAIL IS ACCEPTACLE SO LONG AS IT DOES NOT AFFECT THE OVERALL COPLANARITY OF THE TAIL.
8. CAP TO BE POSITION IN THE CENTER OF HEADER FOR PICK AND PLACE.
9. CKT 4 & 6 HAS NO IDENTIFICATION TAG.
10. THIS HEADER MATES WITH MOLEX:
    a) CRIMP RECEPTACLE HOUSING, 51110 SERIES WITH CRIMP TERMINAL, 50394 SERIES.
    b) 2MM MILLIGRID DUAL ROW IDT, 87568 SERIES.
11. NO CENTRE POLARIZATION SLOT FOR CKT SIZE 4 AND 6.

ADD IN NOTES NO.11
EC NO: S2009-0943 2009/07/01
DRWN:YMCHONG 2009/07/08
CH'KD:SKANG 2009/07/16
APPR:MLONG
DESCRIPTION
REV
A5

QUALITY SYMBOLS
▼=0
Ⓒ=0

GENERAL TOLERANCES (UNLESS SPECIFIED)

	mm	INCH
4 PLACES	± ---	± ---
3 PLACES	± ---	± ---
2 PLACES	± 0.2	± ---
1 PLACE	± ---	± ---
ANGULAR ± 3 °		

DRAFT WHERE APPLICABLE MUST REMAIN WITHIN DIMENSIONS

DIMENSION STYLE: MM ONLY
SCALE: NTS
DESIGN UNITS: METRIC
THIRD ANGLE PROJECTION

		DATE
DRAWN BY	ATSEE	2003/10/15
CHECKED BY	KCLING	2003/11/07
APPROVED BY	SKTOH	2003/11/07

TITLE: MGRID, SHROUDED HEADER W/PEGS/CAP/LOCK FEATURE IN TUBE AND T&R, SMT

MOLEX INCORPORATED

MATERIAL NO.: SEE TABLE
DOCUMENT NO.: SD-87832-011
SHEET NO.: 1 OF 2
SIZE: A3

THIS DRAWING CONTAINS INFORMATION THAT IS PROPRIETARY TO MOLEX INCORPORATED AND SHOULD NOT BE USED WITHOUT WRITTEN PERMISSION

P/N WITH CAP IN T&R	CKT SIZE	F	Bo	So	W
87832-0407	04	7.50	7.15	-	16.00
87832-0607	06	11.50	9.15	-	24.00
87832-0807	08	11.50	11.05	-	24.00
87832-1007	10	11.50	13.05	-	24.00
87832-1207	12	14.20	15.15	28.40	32.00

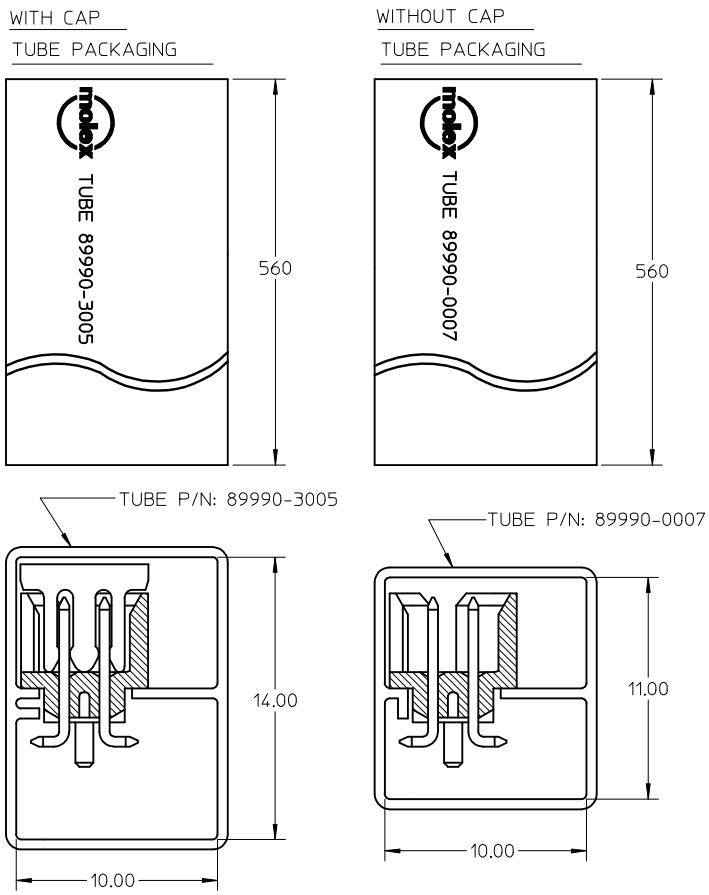

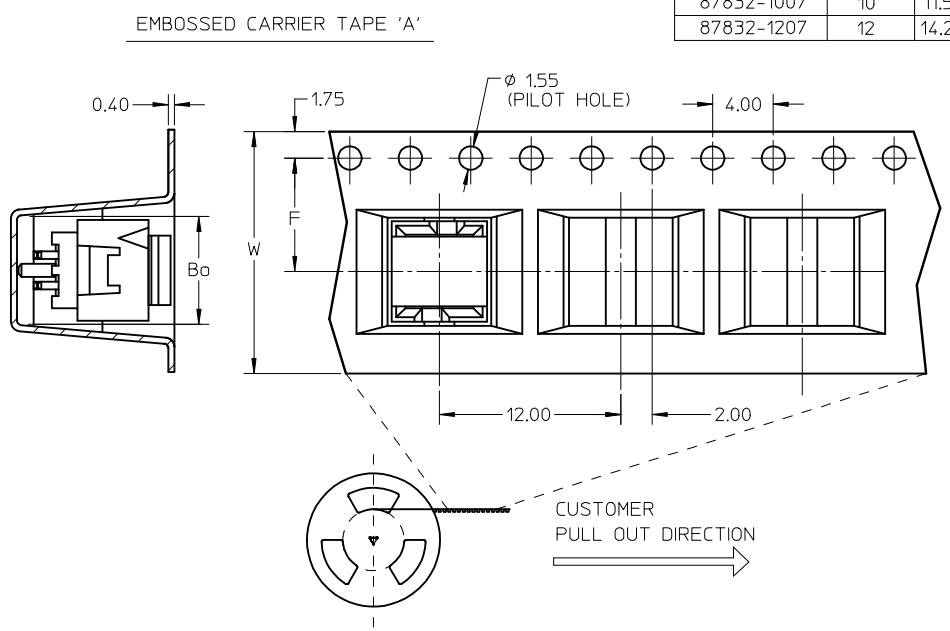

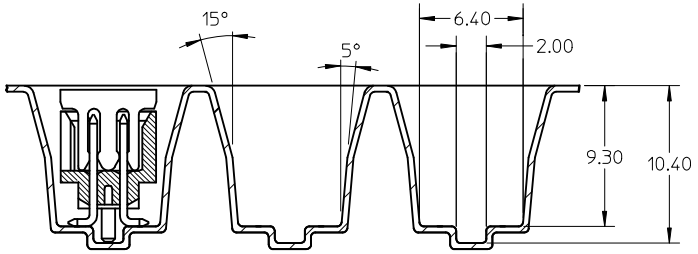

NOTES:

1. LEADER AND TRAILER TAPE

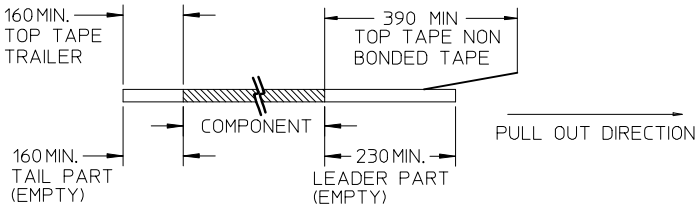

2. PEELING OFF FORCE OF THE TOP TAPE: 20-80gf.
(PEELING DIRECTION AS SHOWN IN FOLLOWING FIGURE)

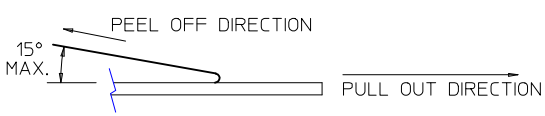

3. PACKAGING STANDARD IS AS PER EIA-481.

REV	DESCRIPTION
A5	ADD NOTES NO.11 EC NO: S2009-0943 DRWN:YMCHONG 2009/07/01 CH'KD:SKANG 2009/07/08 APPR:MLONG 2009/07/16

QUALITY SYMBOLS
▼=0
C=0

GENERAL TOLERANCES (UNLESS SPECIFIED)

	mm	INCH
4 PLACES	± ---	± ---
3 PLACES	± ---	± ---
2 PLACES	± 0.2	± ---
1 PLACE	± ---	± ---

ANGULAR ± 3 °

DRAFT WHERE APPLICABLE MUST REMAIN WITHIN DIMENSIONS

DIMENSION STYLE: MM ONLY
SCALE: NTS
DESIGN UNITS: METRIC
THIRD ANGLE PROJECTION

DRAWN BY	ATSEE	DATE 2003/10/15
CHECKED BY	KCLING	DATE 2003/11/07
APPROVED BY	SKTOH	DATE 2003/11/07

TITLE: MGRID, SHROUDED HEADER W/PEGS/CAP/LOCK FEATURE IN TUBE AND T&R, SMT

molex MOLEX INCORPORATED

MATERIAL NO.: SEE TABLE
DOCUMENT NO.: SD-87832-011
SHEET NO.: 2 OF 2
SIZE: A3

THIS DRAWING CONTAINS INFORMATION THAT IS PROPRIETARY TO MOLEX INCORPORATED AND SHOULD NOT BE USED WITHOUT WRITTEN PERMISSION