NXP Semiconductors
Data sheet: Advance Information

Document Number: MMPF0100Z
Rev. 12.0, 8/2016

14 channel configurable power management integrated circuit

PF0100Z
Automotive

POWER MANAGEMENT

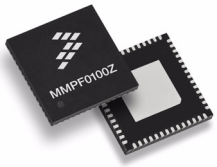

ES SUFFIX (WF-TYPE)
98ASA00589D
56 QFN 8X8

The SMARTMOS PF0100Z AEC Q100 grade 2 automotive power management integrated circuit (PMIC) provides a highly programmable/ configurable architecture, with fully integrated power devices and minimal external components. With up to six buck converters, six linear regulators, RTC supply, and coin-cell charger, the PF0100Z can provide power for a complete system, including applications processors, memory, and system peripherals, in a wide range of applications. With on-chip one time programmable (OTP) memory, the PF0100Z is available in pre-programmed standard versions, or non-programmed to support custom programming. The PF0100Z is especially suited to the i.MX 6 family of devices and is supported by full system level reference designs, and pre-programmed versions of the device.

Features:

- Four to six buck converters, depending on configuration
  - Single/dual phase/ parallel options
  - DDR termination tracking mode option
- Boost regulator to 5.0 V output
- Six general purpose linear regulators
- Programmable output voltage, sequence, and timing
- OTP (one time programmable) memory for device configuration
- Coin cell charger and RTC supply
- DDR termination reference voltage
- Power control logic with processor interface and event detection
- I^2C control
- Individually programmable on, off, and standby modes

Applications:

- GPS
- Auto infotainment
- Heads up display (HUD)
- Rear displays
- Digital instrumentation cluster (DIC)

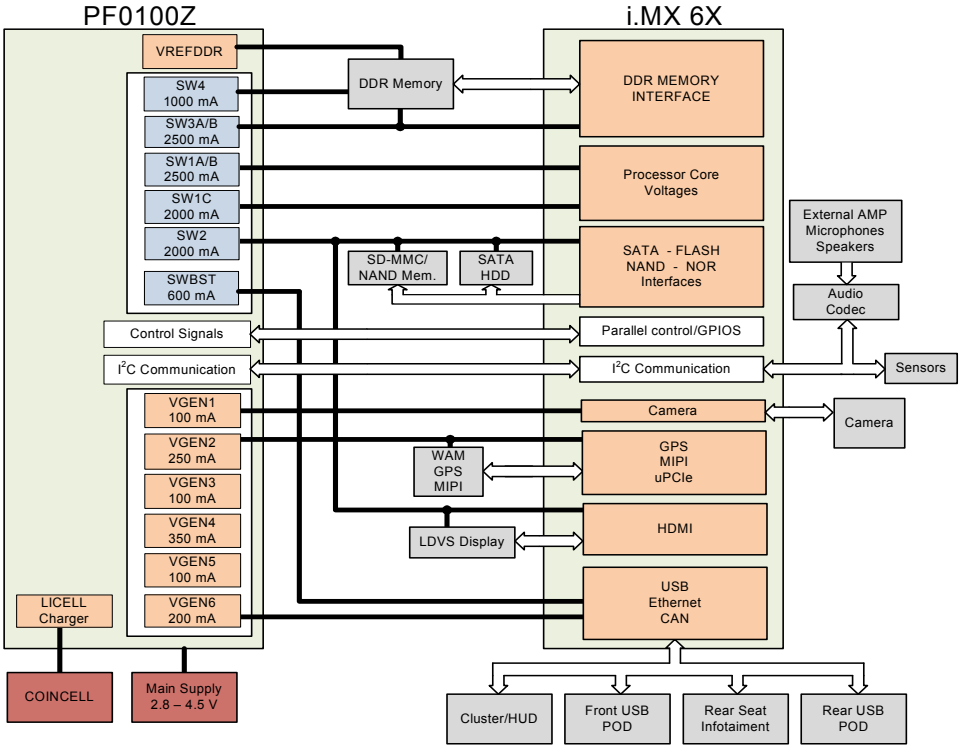

Figure 1. Simplified application diagram

* This document contains certain information on a new product.
Specifications and information herein are subject to change without notice.

© 2016 NXP B.V.

Table of Contents

1 Orderable parts . . . 4
2 Internal block diagram . . . 5
3 Pin connections . . . 6
3.1 Pinout diagram . . . 6
3.2 Pin definitions . . . 7
4 General product characteristics . . . 9
4.1 Absolute maximum ratings . . . 9
4.2 Thermal characteristics . . . 10
4.2.1 Power dissipation . . . 10
4.3 Electrical characteristics . . . 11
4.3.1 General Specifications . . . 11
4.3.2 Current consumption . . . 12
5 General description . . . 14
5.1 Features . . . 14
5.2 Functional block diagram . . . 15
5.3 Functional description . . . 15
5.3.1 Power generation . . . 15
5.3.2 Control logic . . . 15
6 Functional block requirements and behaviors . . . 17
6.1 Start-up . . . 17
6.1.1 Device start-up configuration . . . 17
6.1.2 One time programmability (OTP) . . . 20
6.1.3 OTP prototyping . . . 22
6.1.4 Reading OTP fuses . . . 22
6.1.5 Programming OTP fuses . . . 22
6.2 16 MHz and 32 kHz clocks . . . 23
6.2.1 Clock adjustment . . . 23
6.3 Bias and references block description . . . 23
6.3.1 Internal core voltage references . . . 23
6.3.2 VREFDDR voltage reference . . . 24
6.4 Power generation . . . 27
6.4.1 Modes of operation . . . 27
6.4.2 State machine flow summary . . . 29
6.4.3 Power tree . . . 31
6.4.4 Buck regulators . . . 33
6.4.5 Boost regulator . . . 72
6.4.6 LDO regulators description . . . 75
6.4.7 VSNVS LDO/switch . . . 90
6.5 Control interface I2C block description . . . 95
6.5.1 I2C device ID . . . 95
6.5.2 I2C operation . . . 95
6.5.3 Interrupt handling . . . 96
6.5.4 Interrupt bit summary . . . 96
6.5.5 Specific registers . . . 101
6.5.6 Register Bitmap . . . 102

7 Typical applications . . . 113
7.1 Introduction . . . 113
7.1.1 Application diagram . . . 113
7.1.2 Bill of materials . . . 114
7.2 PF0100Z layout guidelines . . . 117
7.2.1 General board recommendations . . . 117
7.2.2 Component placement . . . 117
7.2.3 General routing requirements . . . 117
7.2.4 Parallel routing requirements . . . 118
7.2.5 Switching regulator layout recommendations . . . 118
7.3 Thermal information . . . 119
7.3.1 Rating data . . . 119
7.3.2 Estimation of junction temperature . . . 120
8 Packaging . . . 121
8.1 Packaging dimensions . . . 121
9 Reference section . . . 125
9.1 Reference documents . . . 125
10 Revision history . . . 126
10.1 Document changes . . . 126

1 Orderable parts

The PF0100Z is available with both pre-programmed and non-programmed OTP memory configurations. The non-programmed device uses “NP” as the programming code. The pre-programmed devices are identified using the program codes from Table 1, which also list the associated NXP reference designs where applicable. Details of the OTP programming for each device can be found in Table 9.

Table 1. Orderable part variations

Part Number	Temperature (T_A)	Package	Programming	Reference designs	Notes
MMPF0100NPAZES	-40 °C to 105 °C	56 QFN ES, 8x8 mm 0.5 mm pitch WF-Type (wettable flank)	NP	MCIMX6QAICPU1 MCIMX6SAICPU1 MCIMX6DLAICPU1	(1), (2), (3)
MMPF0100F0AZES			F0	MCIMX6Q-SDP MCIMX6Q-SDB MCIMX6DL-SDP	(1), (2)
MMPF0100F6AZES			F6	-	
MMPF0100F8AZES			F8	-	
MMPF0100F9AZES			F9	MCIMX6QPlusAICPU3	(1), (2), (3)
MMPF0100FAAZES			FA	-	

Notes
1. For tape and reel add an R2 suffix to the part number.
2. These reference designs use the default startup configuration (VDDOTP = VCOREDIG), which is available on any OTP programmed part.
3. SW2 can support an output current rating of 2.5 A in NP, F9 and FA versions when SW2ILIM=0

1.1 PF0100Z version differences

PF0100AZ is an improved version of the PF0100Z power management IC. Table 2 summarizes the difference between the two versions and should be referred to when migrating from the PF0100Z to the PF0100AZ.

Table 2. Differences between PF0100Z and PF0100AZ

Description	PF0100Z	PF0100AZ
Version identification	Reading SILICON REV register at address 0x03 will return 0x11. DEVICEID register at address 0x00 will read 0x10 in PF0100Z and PF0100AZ	Reading SILICON REV register at address 0x03 will return 0x21. DEVICEID register at address 0x00 will read 0x10 in PF0100Z and PF0100AZ
VSNVS current limit	VSNVS current limit increased in the PF0100AZ. see VSNVS LDO/switch	
OTP_FUSE_PORx register setting during OTP programming	In the PF0100Z, FUSE_POR1, FUSE_POR2, and FUSE_POR3 bits are XOR’ed into the FUSE_POR_XOR bit. The FUSE_POR_XOR bit has to be 1 for fuses to be loaded during startup. This can be achieved by setting any one or all of the FUSE_PORx bits during OTP programming.	In the PF0100AZ, the XOR function is removed. It is required to set FUSE_POR1, FUSE_POR2, and FUSE_POR3 bits during OTP programming.
Erratum ER19	Erratum ER19 applicable to PF0100Z. Applications expecting to operate in the conditions mentioned in ER19 need to implement an external workaround to overcome the problem. Refer to the product errata for details	Errata ER19 fixed in PF0100AZ. External workaround not required
Erratum ER20	Erratum ER20 applicable to PF0100Z	Errata ER20 fixed in PF0100AZ
Erratum ER22	Erratum ER22 applicable to PF0100Z	Errata ER22 fixed in PF0100AZ. Workaround not required
Ambient operating temperature	-40 °C to 85 °C	-40 °C to 105 °C

2 Internal block diagram

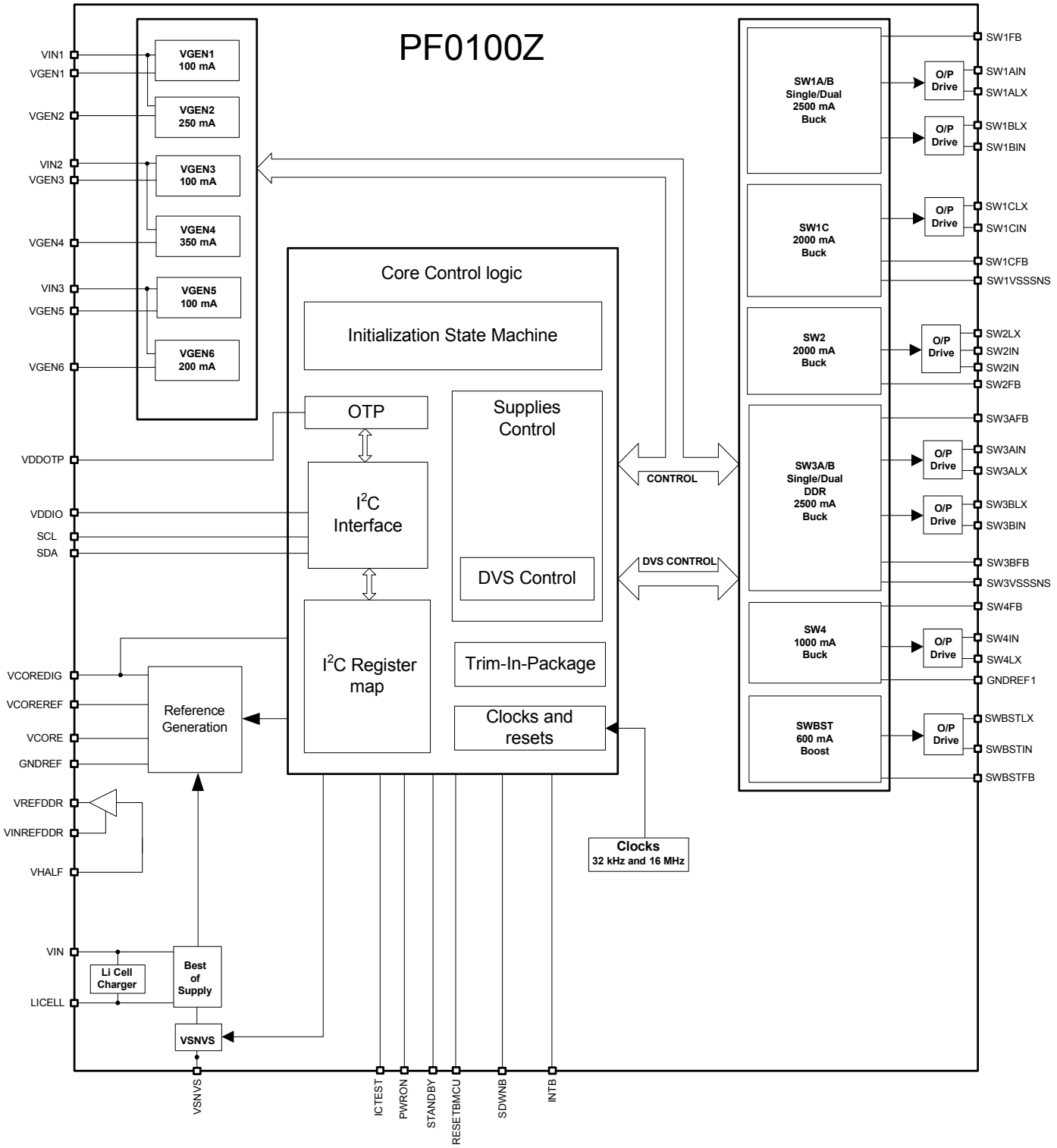

Figure 2. Simplified internal block diagram

3 Pin connections

3.1 Pinout diagram

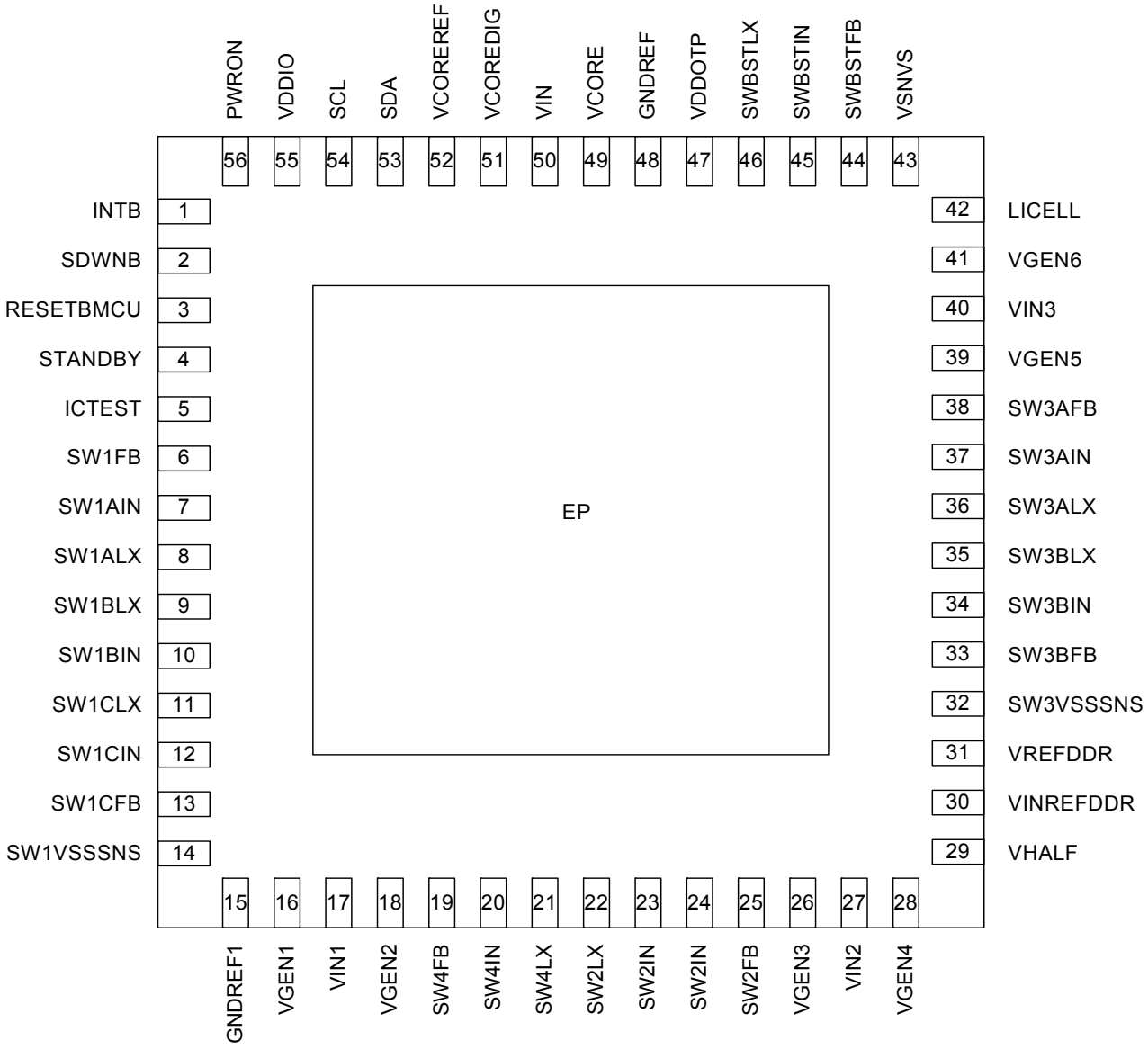

Figure 3. Pinout diagram

3.2 Pin definitions

Table 3. PF0100Z pin definitions

Pin number	Pin name	Pin function	Max rating	Type	Definition
1	INTB	O	3.6 V	Digital	Open drain interrupt signal to processor
2	SDWNB	O	3.6 V	Digital	Open drain signal to indicate an imminent system shutdown
3	RESETBMCU	O	3.6 V	Digital	Open drain reset output to processor. Alternatively can be used as a power good output.
4	STANDBY	I	3.6 V	Digital	Standby input signal from processor
5	ICTEST	I	7.5 V	Digital/ Analog	Reserved pin. Connect to GND in application.
6	SW1FB [(5)]	I	3.6 V	Analog	Output voltage feedback for SW1A/B. Route this trace separately from the high current path and terminate at the output capacitance.
7	SW1AIN [(5)]	I	4.8 V	Analog	Input to SW1A regulator. Bypass with at least a 4.7 µF ceramic capacitor and a 0.1 µF decoupling capacitor as close to the pin as possible.
8	SW1ALX [(5)]	O	4.8 V	Analog	Regulator 1A switch node connection
9	SW1BLX [(5)]	O	4.8 V	Analog	Regulator 1B switch node connection
10	SW1BIN [(5)]	I	4.8 V	Analog	Input to SW1B regulator. Bypass with at least a 4.7 µF ceramic capacitor and a 0.1 µF decoupling capacitor as close to the pin as possible.
11	SW1CLX [(5)]	O	4.8 V	Analog	Regulator 1C switch node connection
12	SW1CIN [(5)]	I	4.8 V	Analog	Input to SW1C regulator. Bypass with at least a 4.7 µF ceramic capacitor and a 0.1 µF decoupling capacitor as close to the pin as possible.
13	SW1CFB [(5)]	I	3.6V	Analog	Output voltage feedback for SW1C. Route this trace separately from the high current path and terminate at the output capacitance.
14	SW1VSSSNS	GND	-	GND	Ground reference for regulators SW1ABC. It is connected externally to GNDREF through a board ground plane.
15	GNDREF1	GND	-	GND	Ground reference for regulators SW2 and SW4. It is connected externally to GNDREF, via board ground plane.
16	VGEN1	O	2.5 V	Analog	VGEN1 regulator output, Bypass with a 2.2 µF ceramic output capacitor.
17	VIN1	I	3.6 V	Analog	VGEN1, 2 input supply. Bypass with a 1.0 µF decoupling capacitor as close to the pin as possible.
18	VGEN2	O	2.5 V	Analog	VGEN2 regulator output, Bypass with a 4.7 µF ceramic output capacitor.
19	SW4FB [(5)]	I	3.6 V	Analog	Output voltage feedback for SW4. Route this trace separately from the high current path and terminate at the output capacitance.
20	SW4IN [(5)]	I	4.8 V	Analog	Input to SW4 regulator. Bypass with at least a 4.7 µF ceramic capacitor and a 0.1 µF decoupling capacitor as close to the pin as possible.
21	SW4LX [(5)]	O	4.8 V	Analog	Regulator 4 switch node connection
22	SW2LX [(5)]	O	4.8 V	Analog	Regulator 2 switch node connection
23	SW2IN [(5)]	I	4.8 V	Analog	Input to SW2 regulator. Connect pin 23 together with pin 24 and bypass with at least a 4.7 µF ceramic capacitor and a 0.1 µF decoupling capacitor as close to these pins as possible.
24	SW2IN [(5)]	I	4.8 V	Analog	
25	SW2FB [(5)]	I	3.6 V	Analog	Output voltage feedback for SW2. Route this trace separately from the high current path and terminate at the output capacitance.
26	VGEN3	O	3.6 V	Analog	VGEN3 regulator output. Bypass with a 2.2 µF ceramic output capacitor.
27	VIN2	I	3.6 V	Analog	VGEN3,4 input. Bypass with a 1.0 µF decoupling capacitor as close to the pin as possible.
28	VGEN4	O	3.6 V	Analog	VGEN4 regulator output, Bypass with a 4.7 µF ceramic output capacitor.
29	VHALF	I	3.6 V	Analog	Half supply reference for VREFDDR

Table 3. PF0100Z pin definitions (continued)

Pin number	Pin name	Pin function	Max rating	Type	Definition
30	VINREFDDR	I	3.6 V	Analog	VREFDDR regulator input. Bypass with at least 1.0 µF decoupling capacitor as close to the pin as possible.
31	VREFDDR	O	3.6 V	Analog	VREFDDR regulator output
32	SW3VSSSNS	GND	-	GND	Ground reference for the SW3 regulator. Connect to GNDREF externally via the board ground plane.
33	SW3BFB [5]	I	3.6 V	Analog	Output voltage feedback for SW3B. Route this trace separately from the high current path and terminate at the output capacitance.
34	SW3BIN [5]	I	4.8 V	Analog	Input to SW3B regulator. Bypass with at least a 4.7 µF ceramic capacitor and a 0.1 µF decoupling capacitor as close to the pin as possible.
35	SW3BLX [5]	O	4.8 V	Analog	Regulator 3B switch node connection
36	SW3ALX [5]	O	4.8 V	Analog	Regulator 3A switch node connection
37	SW3AIN [5]	I	4.8 V	Analog	Input to SW3A regulator. Bypass with at least a 4.7 µF ceramic capacitor and a 0.1 µF decoupling capacitor as close to the pin as possible.
38	SW3AFB [5]	I	3.6 V	Analog	Output voltage feedback for SW3A. Route this trace separately from the high current path and terminate at the output capacitance.
39	VGEN5	O	3.6 V	Analog	VGEN5 regulator output. Bypass with a 2.2 µF ceramic output capacitor.
40	VIN3	I	4.8 V	Analog	VGEN5, six input. Bypass with a 1.0 µF decoupling capacitor as close to the pin as possible.
41	VGEN6	O	3.6 V	Analog	VGEN6 regulator output. By pass with a 2.2 µF ceramic output capacitor.
42	LICELL	I/O	3.6 V	Analog	Coin cell supply input/output
43	VSNVS	O	3.6 V	Analog	LDO or coin cell output to processor
44	SWBSTFB [5]	I	5.5 V	Analog	Boost regulator feedback. Connect this pin to the output rail close to the load. Keep this trace away from other noisy traces and planes.
45	SWBSTIN [5]	I	4.8 V	Analog	Input to SWBST regulator. Bypass with at least a 2.2 µF ceramic capacitor and a 0.1 µF decoupling capacitor as close to the pin as possible.
46	SWBSTLX [5]	O	7.5 V	Analog	SWBST switch node connection
47	VDDOTP	I	10 V[4]	Digital & Analog	Supply to program OTP fuses
48	GNDREF	GND	-	GND	Ground reference for the main band gap regulator.
49	VCORE	O	3.6 V	Analog	Analog core supply
50	VIN	I	4.8 V	Analog	Main chip supply
51	VCOREDIG	O	1.5 V	Analog	Digital core supply
52	VCOREREF	O	1.5 V	Analog	Main band gap reference
53	SDA	I/O	3.6 V	Digital	I^2C data line (open drain)
54	SCL	I	3.6 V	Digital	I^2C clock
55	VDDIO	I	3.6 V	Analog	Supply for I^2C bus
56	PWRON	I	3.6 V	Digital	Power on/off from processor
-	EP	GND	-	GND	Expose pad. Functions as ground return for buck regulators. Tie this pad to the inner and external ground planes through vias to allow effective thermal dissipation.

Notes

4. 10 V Maximum voltage rating during OTP fuse programming. 7.5 V Maximum DC voltage rated otherwise.
5. Unused switching regulators should be connected as follows: Pins SWxLX and SWxFB should be unconnected and pin SWxIN should be connected to VIN with a 0.1 µF bypass capacitor.

4 General product characteristics

4.1 Absolute maximum ratings

Table 4. Absolute maximum ratings

All voltages are with respect to ground, unless otherwise noted. Exceeding these ratings may cause malfunction or permanent damage to the device. The detailed maximum voltage rating per pin can be found in the pin list section.

Symbol	Description	Value	Unit	Notes
Electrical ratings				
V_{IN}	Main input supply voltage	-0.3 to 4.8	V	
V_{DDOTP}	OTP programming input supply voltage	-0.3 to 10	V	
V_{LICELL}	Coin cell voltage	-0.3 to 3.6	V	
V_{ESD}	ESD ratings Human body model VSNVS pin All other pins Charge device model	 ±1800 ±2000 ±500	V	(6)

Notes

6. ESD testing is performed in accordance with the human body model (HBM) (C_{ZAP} = 100 pF, R_{ZAP} = 1500 Ω), and the charge device model (CDM), robotic (C_{ZAP} = 4.0 pF).

4.2 Thermal characteristics

Table 5. Thermal ratings

Symbol	Description (rating)	Min.	Max.	Unit	Notes
Thermal ratings					
T_A	Ambient operating temperature range PF0100Z PF0100AZ	 -40 -40	 85 105	°C	
T_J	Operating junction temperature range	-40	125	°C	(7)
T_{ST}	Storage temperature range	-65	150	°C	
T_{PPRT}	Peak package reflow temperature	–	Note 9	°C	(8)(9)
QFN56 thermal resistance and package dissipation ratings					
$R_{\theta JA}$	Junction to ambient Natural convection Four layer board (2s2p) Eight layer board (2s6p)	 – –	 28 15	°C/W	(10)(11)(12)
$R_{\theta JMA}$	Junction to ambient (at 200 ft/min) Four layer board (2s2p)	 –	 22	°C/W	(10)(12)
$R_{\theta JB}$	Junction to board	–	10	°C/W	(13)
$R_{\Theta JCBOTTOM}$	Junction to case bottom	–	1.2	°C/W	(14)
ΨJT	Junction to package top Natural convection	–	2.0	°C/W	(15)

Notes

7. Do not operate beyond 125 °C for extended periods of time. Operation above 150 °C may cause permanent damage to the IC. See Table 6 for thermal protection features.
8. Pin soldering temperature limit is for 10 seconds maximum duration. Not designed for immersion soldering. Exceeding these limits may cause a malfunction or permanent damage to the device.
9. NXP's package reflow capability meets Pb-free requirements for JEDEC standard J-STD-020C. For peak package reflow temperature and moisture sensitivity levels (MSL), go to www.nxp.com, search by part number (remove prefixes/suffixes) and enter the core ID to view all orderable parts, and review parametrics.
10. Junction temperature is a function of die size, on-chip power dissipation, package thermal resistance, mounting site (board) temperature, ambient temperature, air flow, power dissipation of other components on the board, and board thermal resistance.
11. The Board uses the JEDEC specifications for thermal testing (and simulation) JESD51-7 and JESD51-5.
12. Per JEDEC JESD51-6 with the board horizontal.
13. Thermal resistance between the die and the printed circuit board per JEDEC JESD51-8. Board temperature is measured on the top surface of the board near the package.
14. Thermal resistance between the die and the case top surface as measured by the cold plate method (MIL SPEC-883 Method 1012.1).
15. Thermal characterization parameter indicating the temperature difference between package top and the junction temperature per JEDEC JESD51-2. When the Greek letter (Ψ) is not available, the thermal characterization parameter is written as Psi-JT.

4.2.1 Power dissipation

During operation, the temperature of the die should not exceed the operating junction temperature noted in Table 5. To optimize the thermal management and to avoid overheating, the PF0100Z provides thermal protection. An internal comparator monitors the die temperature. Interrupts THERM110I, THERM120I, THERM125I, and THERM130I are generated when the respective thresholds specified in Table 6 are crossed in either direction. The temperature range can be determined by reading the THERMxxxS bits in register INTSENSE0.

In the event of excessive power dissipation, thermal protection circuitry shuts down the PF0100Z. This thermal protection acts above the thermal protection threshold listed in Table 6. To avoid any unwanted power downs resulting from internal noise, the protection is debounced for 8.0 ms. This protection should be considered as a fail-safe mechanism and therefore the system should be configured so this protection is not tripped under normal conditions.

Table 6. Thermal protection thresholds

Parameter	Min.	Typ.	Max.	Units	Notes
Thermal 110 °C threshold (THERM110)	100	110	120	°C	
Thermal 120 °C threshold (THERM120)	110	120	130	°C	
Thermal 125 °C threshold (THERM125)	115	125	135	°C	
Thermal 130 °C threshold (THERM130)	120	130	140	°C	
Thermal warning hysteresis	2.0	–	4.0	°C	
Thermal protection threshold	130	140	150	°C	

4.3 Electrical characteristics

4.3.1 General Specifications

Table 7. General PMIC Static Characteristics

PF0100Z T_A = -40 °C to 85 °C, PF0100AZ T_A = -40 °C to 105 °C, VIN = 2.8 V to 4.5 V, VDDIO = 1.7 V to 3.6 V, typical external component values and full load current range, unless otherwise noted.

Pin name	Parameter	Load condition	Min.	Max.	Unit
PWRON	V_{IL}	–	0.0	0.2 * VSNVS	V
	V_{IH}	–	0.8 * VSNVS	3.6	V
RESETBMCU	V_{OL}	-2.0 mA	0.0	0.4	V
	V_{OH}	Open drain	0.7* VIN	VIN	V
SCL	V_{IL}	–	0.0	0.2 * VDDIO	V
	V_{IH}	–	0.8 * VDDIO	3.6	V
SDA	V_{IL}	–	0.0	0.2 * VDDIO	V
	V_{IH}	–	0.8 * VDDIO	3.6	V
	V_{OL}	-2.0 mA	0.0	0.4	V
	V_{OH}	Open drain	0.7*VDDIO	VDDIO	V
INTB	V_{OL}	-2.0 mA	0.0	0.4	V
	V_{OH}	Open drain	0.7* VIN	VIN	V
SDWNB	V_{OL}	-2.0 mA	0.0	0.4	V
	V_{OH}	Open drain	0.7* VIN	VIN	V
STANDBY	V_{IL}	–	0.0	0.2 * VSNVS	V
	V_{IH}	–	0.8 * VSNVS	3.6	V
VDDOTP	V_{IL}	–	0.0	0.3	V
	V_{IH}	–	1.1	1.7	V

4.3.2 Current consumption

The current consumption of the individual blocks is described in detail throughout this specification. For convenience, a summary table follows for standard use cases.

Table 8. Current consumption summary

PF0100Z T_A = -40 °C to 85 °C, PF0100AZ T_A = -40 °C to 105 °C, VIN = 3.6 V, VDDIO = 1.7 V to 3.6 V, LICELL = 1.8 V to 3.3 V, VSNVS = 3.0 V, typical external component values, unless otherwise noted. Typical values are characterized at VIN = 3.6 V, VDDIO = 3.3 V, LICELL = 3.0 V, VSNVS = 3.0 V and 25 °C, unless otherwise noted.

Mode	PF0100Z conditions	System conditions	Typ.	Max.	Unit	Notes
Coin Cell	VSNVS from LICELL All other blocks off VIN = 0.0 V VSNVSVOLT[2:0] = 110	No load on VSNVS	4.0	7.0	µA	(16),(18),(21)
Off MMPF0100Z	VSNVS from VIN or LICELL Wake-up from PWRON active 32 k RC on All other blocks off VIN ≥ UVDET	No load on VSNVS, PMIC able to wake-up	16	21	µA	(17),(18)
Off MMPF0100AZ	VSNVS from VIN or LICELL Wake-up from PWRON active 32 k RC on All other blocks off VIN ≥ UVDET	No load on VSNVS, PMIC able to wake-up	17	25	µA	(17),(18)
Sleep	VSNVS from VIN Wake-up from PWRON active Trimmed reference active SW3A/B PFM Trimmed 16 MHz RC off 32 k RC on VREFDDR disabled T_A = -40 °C to 85 °C T_A = -40 °C to 105 °C (PF0100AZ Only)	No load on VSNVS. DDR memories in self refresh	122 122	220 250	µA	(18)
Standby MMPF0100Z	VSNVS from either VIN or LICELL SW1A/B combined in PFM SW1C in PFM SW2 in PFM SW3A/B combined in PFM SW4 in PFM SWBST off Trimmed 16 MHz RC enabled Trimmed reference active VGEN1-6 enabled VREFDDR enabled	No load on VSNVS. Processor enabled in low power mode. All rails powered on except boost (load = 0 mA)	297 297	450 (19) 1000 (20)	µA	(18)

Table 8. Current consumption summary (continued)

PF0100Z T_A = -40 °C to 85 °C, PF0100AZ T_A = -40 °C to 105 °C, VIN = 3.6 V, VDDIO = 1.7 V to 3.6 V, LICELL = 1.8 V to 3.3 V, VSNVS = 3.0 V, typical external component values, unless otherwise noted. Typical values are characterized at VIN = 3.6 V, VDDIO = 3.3 V, LICELL = 3.0 V, VSNVS = 3.0 V and 25 °C, unless otherwise noted.

Standby MMPF0100AZ	VSNVS from either VIN or LICELL SW1A/B combined in PFM SW1C in PFM SW2 in PFM SW3A/B combined in PFM SW4 in PFM SWBST off Trimmed 16 MHz RC enabled Trimmed reference active VGEN1-6 enabled VREFDDR enabled T_A = -40 °C to 85 °C T_A = -40 °C to 105 °C	No load on VSNVS. Processor enabled in low power mode. All rails powered on except boost (load = 0 mA)	 297 297	 450 550	µA	(18)

Notes

16. Refer to Figure 4 for coin cell mode characteristics over temperature.
17. When V_{IN} is below the UVDET threshold, in the range of 1.8 V ≤ V_{IN} < 2.65 V, the quiescent current increases by 50 µA, typically.
18. For PFM operation, headroom should be 300 mV or greater.
19. From 0 °C to 85 °C
20. From -40 °C to 85 °C
21. Additional current may be drawn in the coin cell mode when RESETBMCU is pulled up to VSNVS due an internal path from RESETBMCU to VIN. The additional current is <30 µA with a pull up resistor of 100 kΩ. The i.MX 6x processors have an internal pull up from the POR_B pin to the VDD_SNVS_IN pin. For i.MX 6x applications, if additional current in the coin cell mode is not desired, use an external switch to disconnect the RESETBMCU path when VIN is removed. For non-i.MX 6 applications, pull-up RESETBMCU to a rail that is off in the coin cell mode.

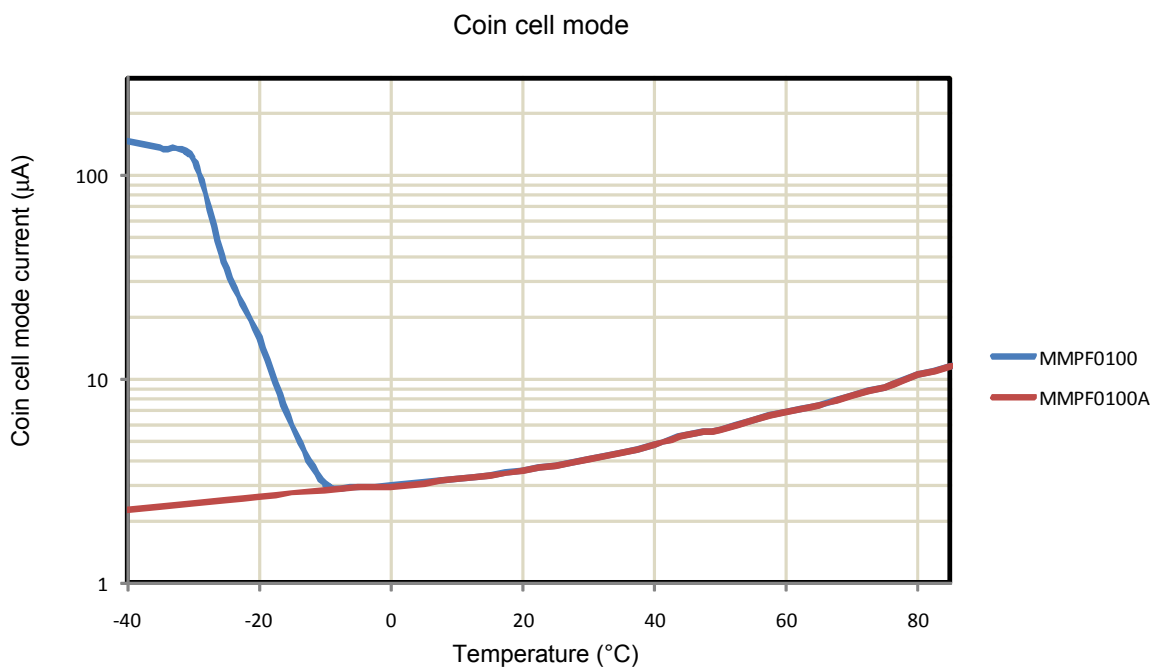

Figure 4. Current overtemperature waveforms

5 General description

The PF0100Z is the power management integrated circuit (PMIC) designed primarily for use with NXP's i.MX 6 series of application processors.

5.1 Features

This section summarizes the PF0100Z features.

- Input voltage range to PMIC: 2.8 V - 4.5 V
- Buck regulators
  - Four to six channel configurable
    - SW1A/B/C, 4.5 A (single); 0.3 V to 1.875 V
    - SW1A/B, 2.5 A (single/dual); SW1C 2.0 A (independent); 0.3 V to 1.875 V
    - SW2, 2.0 A; 0.4 V to 3.3 V (2.5 A; 1.2 V to 3.3 V [22])
    - SW3A/B, 2.5 A (single/dual); 0.4 V to 3.3 V
    - SW3A, 1.25 A (independent); SW3B, 1.25 A (independent); 0.4 V to 3.3 V
    - SW4, 1.0 A; 0.4 V to 3.3 V
    - SW4, VTT mode provide DDR termination at 50% of SW3A
  - Dynamic voltage scaling
  - Modes: PWM, PFM, APS
  - Programmable output voltage
  - Programmable current limit
  - Programmable soft start
  - Programmable PWM switching frequency
  - Programmable OCP with fault interrupt
- Boost regulator
  - SWBST, 5.0 V to 5.15 V, 0.6 A, OTG support
  - Modes: PFM and Auto
  - OCP fault interrupt
- LDOs
  - Six user programable LDO
    - VGEN1, 0.80 V to 1.55 V, 100 mA
    - VGEN2, 0.80 V to 1.55 V, 250 mA
    - VGEN3, 1.8 V to 3.3 V, 100 mA
    - VGEN4, 1.8 V to 3.3 V, 350 mA
    - VGEN5, 1.8 V to 3.3 V, 100 mA
    - VGEN6, 1.8 V to 3.3 V, 200 mA
  - Soft start
  - LDO/switch supply
    - VSNVS (1.0/1.1/1.2/1.3/1.5/1.8/3.0 V), 400 μA
- DDR memory reference voltage
  - VREFDDR, 0.6 V to 0.9 V, 10 mA
- 16 MHz internal master clock
- OTP (one time programmable) memory for device configuration
  - User programmable start-up sequence and timing
- Battery backed memory including coin cell charger
- I^2C interface
- User programmable standby, sleep, and off modes

Notes

22. SW2 capable of 2.5 A in NP/F9/FA versions

5.2 Functional block diagram

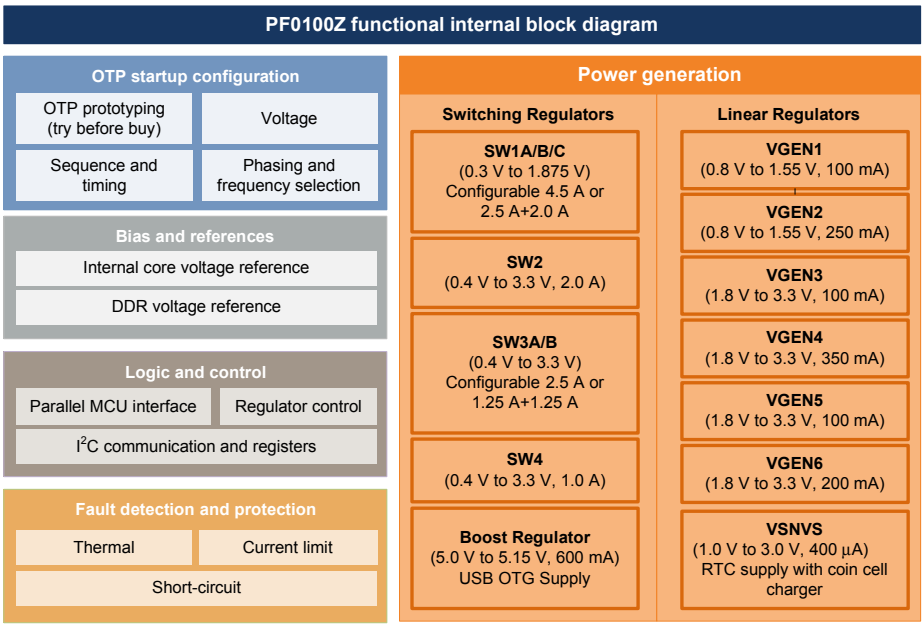

Figure 5. Functional block diagram

5.3 Functional description

5.3.1 Power generation

The PF0100Z PMIC features four buck regulators (up to six independent outputs), one boost regulator, six general purpose LDOs, one switch/LDO combination, and a DDR voltage reference to supply voltages for the application processor and peripheral devices.

The number of independent buck regulator outputs can be configured from four to six, thereby providing flexibility to operate with higher current capability, or to operate as independent outputs for applications requiring more voltage rails with lower current demands. Further, SW1 and SW3 regulators can be configured as single/dual phase and/or independent converters. One of the buck regulators, SW4, can also operate as a tracking regulator when used for memory termination. The buck regulators provide the supply to processor cores and to other low voltage circuits such as IO and memory. Dynamic voltage scaling is provided to allow controlled supply rail adjustments for the processor cores and/or other circuitry.

Depending on the system power path configuration, the six general purpose LDO regulators can be directly supplied from the main input supply or from the switching regulators to power peripherals, such as audio, camera, Bluetooth, Wireless LAN, etc. A specific VREFDDR voltage reference is included to provide accurate reference voltage for DDR memories operating with or without VTT termination. The VSNVS block behaves as an LDO, or as a bypass switch to supply the SNVS/SRTC circuitry on the i.MX processors; VSNVS may be powered from V_{IN}, or from a coin cell.

5.3.2 Control logic

The PF0100Z PMIC is fully programmable via the I^2C interface. Additional communication is provided by direct logic interfacing including interrupt and reset. Start-up sequence of the device is selected upon the initial OTP configuration explained in the Start-up section, or by configuring the “try before buy” feature to test different power up sequences before choosing the final OTP configuration.

The PF0100Z PMIC has the interfaces for the power buttons and dedicated signaling interfacing with the processor. It also ensures supply of critical internal logic and other circuits from the coin cell during brief interruptions from the main battery. A charger for the coin cell is included as well.

5.3.2.1 Interface signals

5.3.2.1.1 PWRON

PWRON is an input signal to the IC generating a turn-on event. It can be configured to detect a level, or an edge using the PWRON_CFG bit. Refer to section 6.4.2.1 Turn on events, page 30 for more details.

5.3.2.1.2 STANDBY

STANDBY is an input signal to the IC. When it is asserted, the part enters standby mode and when de-asserted, the part exits standby mode. STANDBY can be configured as active high or active low using the STANDBYINV bit. Refer to the section 6.4.1.3 Standby mode, page 28 for more details.

Note: When operating the PMIC at $V_{IN} \leq 2.85$ V and VSNVS is programmed for a 3.0 V output, a coin cell must be present to provide VSNVS, or the PMIC does not reliably enter and exit the STANDBY mode.

5.3.2.1.3 RESETBMCU

RESETBMCU is an open-drain, active low output configurable for two modes of operation. In its default mode, it is de-asserted 2.0 ms to 4.0 ms after the last regulator in the start-up sequence is enabled; refer to Figure 6 as an example. In this mode, the signal can be used to bring the processor out of reset, or as an indicator all supplies have been enabled; it is only asserted for a turn-off event.

When configured for its fault mode, RESETBMCU is de-asserted after the start-up sequence is completed only if no faults occurred during start-up. At anytime, if a fault occurs and persists for 1.8 ms typically, RESETBMCU is asserted, LOW. The PF0100Z is turned off if the fault persists for more than 100 ms typically. The PWRON signal restarts the part, though if the fault persists, the sequence described previously is repeated. To enter the fault mode, set bit OTP_PG_EN of register OTP PWRGD EN to “1”. This register, 0xE8, is located on Table 136. Extended page 1, page 106 of the register map. To test the fault mode, the bit may be set during TBB prototyping, or the mode may be permanently chosen by programming OTP fuses.

5.3.2.1.4 SDWNB

SDWNB is an open drain, active low output notifying the processor of an imminent PMIC shut down. It is asserted low for one 32 kHz clock cycle before powering down and then de-asserted in the OFF state.

5.3.2.1.5 INTB

INTB is an open-drain, active low output. It is asserted when any fault occurs, provided the fault interrupt is unmasked. INTB is de-asserted after the fault interrupt is cleared by software, which requires writing a “1” to the fault interrupt bit.

6 Functional block requirements and behaviors

6.1 Start-up

The PF0100Z can be configured to start-up from either the internal OTP configuration, or with a hard-coded configuration built in to the device. The internal hard-coded configuration is enabled by connecting the VDDOTP pin to VCOREDIG through a 100 kΩ resistor. The OTP configuration is enabled by connecting VDDOTP to GND.

For NP devices, selecting the OTP configuration causes the PF0100Z not to start-up. However, the PF0100Z can be controlled through the I^2C port for prototyping and programming. Once programmed, the NP device starts up with the customer programmed configuration.

6.1.1 Device start-up configuration

Table 9 shows the default configuration, which can be accessed on all devices as described previously, as well as the pre-programmed OTP configurations.

Table 9. Start-up configuration

Registers	Default configuration	Pre-programmed OTP configuration				
	All devices	F0	F6	F8	F9	FA
Default I^2C Address	0x08	0x08	0x08	0x08	0x08	0x08
VSNVS_VOLT	3.0 V	3.0 V	3.0 V	3.0 V	3.0 V	3.0 V
SW1AB_VOLT	1.375 V	1.375 V	1.375 V	1.425 V	1.375 V	1.375 V
SW1AB_SEQ	1	1	2	1	5	5
SW1C_VOLT	1.375 V	1.375 V	1.375 V	1.425 V	1.375 V	1.375 V
SW1C_SEQ	1	2	2	2	5	5
SW2_VOLT	3.0 V	3.3 V	3.3 V	3.0 V	1.375 V	1.375 V
SW2_SEQ	2	5	4	5	5	5
SW3A_VOLT	1.5 V	1.5 V	1.35 V	1.5 V	1.350 V	1.5 V
SW3A_SEQ	3	3	3	3	6	6
SW3B_VOLT	1.5 V	1.5 V	1.35 V	1.5 V	1.350 V	1.5 V
SW3B_SEQ	3	3	3	3	6	6
SW4_VOLT	1.8 V	3.15 V	1.8 V	3.15 V	1.825 V	1.825 V
SW4_SEQ	3	6	4	-	7	7
SWBST_VOLT	-	5.0 V	5.0 V	-	5.0 V	5.0 V
SWBST_SEQ	-	13	Off	-	10	10
VREFDDR_SEQ	3	3	3	3	6	6
VGEN1_VOLT	-	1.5 V	1.2 V	1.5 V	1.2 V	1.2 V
VGEN1_SEQ	-	9	5	-	-	-
VGEN2_VOLT	1.5 V	1.5 V	1.5 V	1.5 V	1.5 V	1.5 V
VGEN2_SEQ	2	10	Off	-	8	8
VGEN3_VOLT	-	2.5 V	2.8 V	2.5 V	1.8 V	1.8 V
VGEN3_SEQ	-	11	5	-	8	8
VGEN4_VOLT	1.8 V	1.8 V	1.8 V	1.8 V	3.0 V	3.0 V
VGEN4_SEQ	3	7	4	-	4	4

Table 9. Start-up configuration (continued)

Registers	Default configuration	Pre-programmed OTP configuration				
	All devices	F0	F6	F8	F9	FA
VGEN5_VOLT	2.5 V	2.8 V	3.3 V	2.8 V	2.5 V	2.5 V
VGEN5_SEQ	3	12	5	-	8	8
VGEN6_VOLT	2.8 V	3.3 V	3.0 V	2.8 V	2.8 V	2.8 V
VGEN6_SEQ	3	8	1	6	7	7
PU CONFIG, SEQ_CLK_SPEED	1.0 ms	2.0 ms	0.5 ms	2.0 ms	0.5 ms	0.5 ms
PU CONFIG, SWDVS_CLK	6.25 mV/µs	1.5625 mV/µs	6.25 mV/µs	25 mV/16 µs	6.25 mV/µs	6.25 mV/µs
PU CONFIG, PWRON	Level sensitive					
SW1AB CONFIG	SW1AB Single Phase, SW1C Independent Mode, 2.0 MHz				SW1ABC Single Phase, 2.0 MHz	
SW1C CONFIG	2.0 MHz					
SW2 CONFIG	2.0 MHz					
SW3A CONFIG	SW3AB Single Phase, 2.0 MHz					
SW3B CONFIG	2.0 MHz					
SW4 CONFIG	No VTT, 2.0 MHz					
PG EN	RESETBMCU in Default Mode					

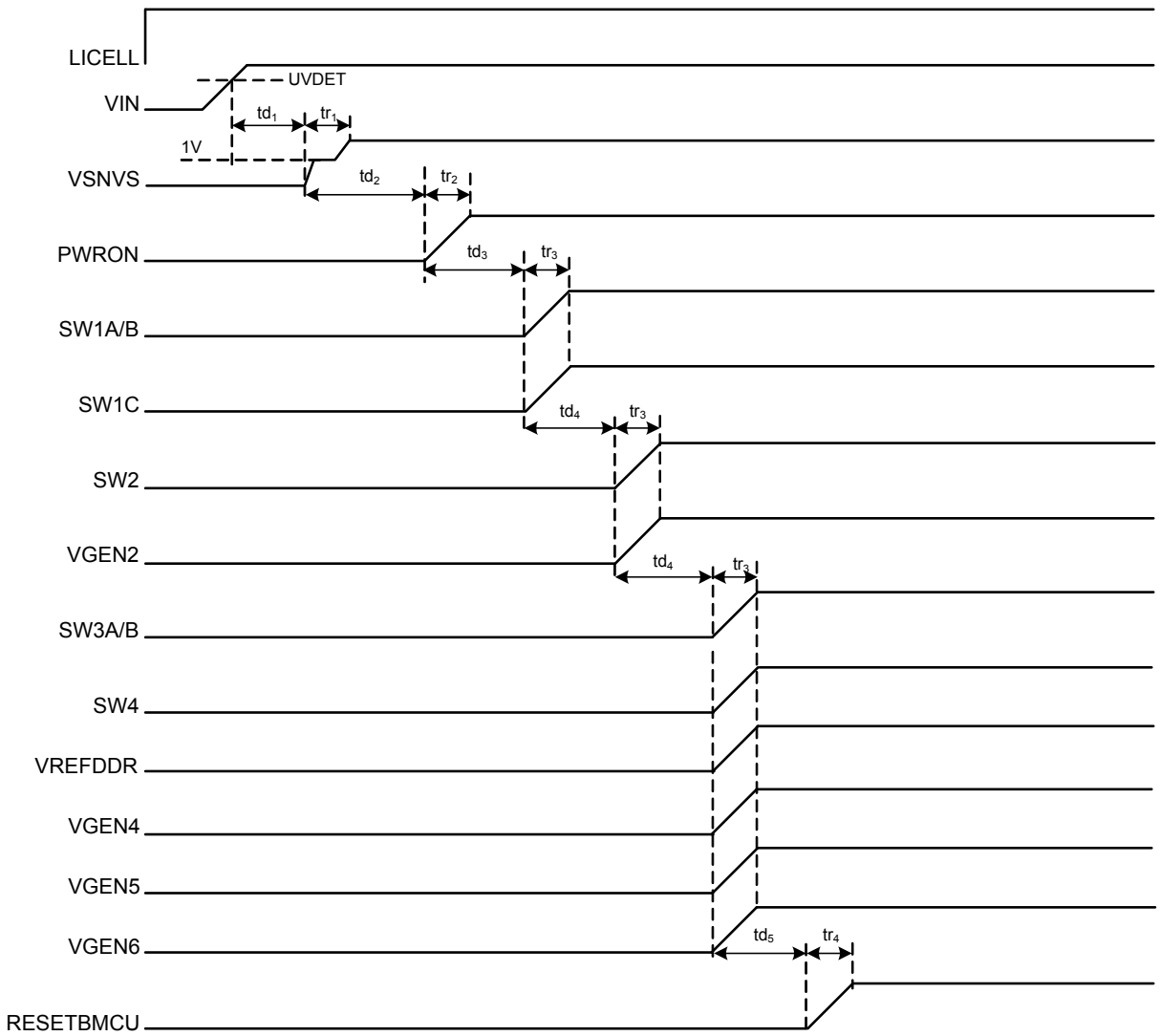

*VSNVS starts from 1.0 V if LICELL is valid before VIN.

Figure 6. Default start-up sequence

Table 10. Default start-up sequence timing

Parameter	Description	Min.	Typ.	Max.	Unit	Notes
t_{D1}	Turn-on delay of VSNVS	–	5.0	–	ms	(23)
t_{R1}	Rise time of VSNVS	–	3.0	–	ms	
t_{D2}	User determined delay	–	1.0	–	ms	
t_{R2}	Rise time of PWRON	–	(24)	–	ms	
t_{D3}	Turn-on delay of first regulator					
	SEQ_CLK_SPEED[1:0] = 00	–	2.0	–	ms	
	SEQ_CLK_SPEED[1:0] = 01	–	2.5	–		(25)
	SEQ_CLK_SPEED[1:0] = 10	–	4.0	–		
	SEQ_CLK_SPEED[1:0] = 11	–	7.0	–		
t_{R3}	Rise time of regulators	–	0.2	–	ms	(26)

Table 10. Default start-up sequence timing (continued)

Parameter	Description	Min.	Typ.	Max.	Unit	Notes
t_{D4}	Delay between regulators					
	SEQ_CLK_SPEED[1:0] = 00	–	0.5	–	ms	
	SEQ_CLK_SPEED[1:0] = 01	–	1.0	–		
	SEQ_CLK_SPEED[1:0] = 10	–	2.0	–		
	SEQ_CLK_SPEED[1:0] = 11	–	4.0	–		
t_{R4}	Rise time of RESETBMCU	–	0.2	–	ms	
t_{D5}	Turn-on delay of RESETBMCU	–	2.0	–	ms	

Notes
23. Assumes LICELL voltage is valid before V_{IN} is applied. If LICELL is not valid before V_{IN} is applied then VSNVS turn-on delay may extend to a maximum of 24 ms.
24. Depends on the external signal driving PWRON.
25. Default configuration.
26. Rise time is a function of slew rate of regulators and nominal voltage selected.

6.1.2 One time programmability (OTP)

OTP allows the programming of start-up configurations for a variety of applications. Before permanently programming the IC by programming fuses, a configuration may be prototyped by using the “try before buy” (TBB) feature. Further, an error correction code (ECC) algorithm is available to correct a single bit error and to detect multiple bit errors when fuses are programmed.

The following parameters which can be configured by OTP are listed.

- General: I^2C slave address, PWRON pin configuration, start-up sequence and timing
- Buck regulators: Output voltage, dual/single phase or independent mode configuration, switching frequency, and soft start ramp rate
- Boost regulator and LDOs: Output voltage

NOTE: When prototyping or programming fuses, the user must ensure register settings are consistent with the hardware configuration. This is most important for the buck regulators, where the quantity, size, and value of the inductors depend on the configuration (single/dual phase or independent mode) and the switching frequency. Additionally, if an LDO is powered by a buck regulator, it is gated by the buck regulator in the start-up sequence.

6.1.2.1 Start-up sequence and timing

Each regulator has 5-bits allocated to program its start-up time slot from a turn on event; therefore, each can be placed from position one to thirty-one in the start-up sequence. The all zeros code indicates a regulator is not part of the start-up sequence and remains off. See Table 11. The delay between each position is equal; however, four delay options are available. See Table 12. The start-up sequence terminates at the last programmed regulator.

Table 11. Start-up sequence

SWxx_SEQ[4:0]/ VGENx_SEQ[4:0]/ VREFDDR_SEQ[4:0]	Sequence
00000	Off
00001	SEQ_CLK_SPEED[1:0] * 1
00010	SEQ_CLK_SPEED[1:0] * 2
*	*
*	*
*	*
*	*
11111	SEQ_CLK_SPEED[1:0] * 31

Table 12. Start-up Sequence Clock Speed

SEQ_CLK_SPEED[1:0]	Time (µs)
00	500
01	1000
10	2000
11	4000

6.1.2.2 PWRON pin configuration

The PWRON pin can be configured as either a level sensitive input (PWRON_CFG = 0), or as an edge sensitive input (PWRON_CFG = 1). As a level sensitive input, an active high signal turns on the part and an active low signal turns off the part, or puts it into sleep mode. As an edge sensitive input, such as when connected to a mechanical switch, a falling edge turns on the part and if the switch is held low for greater than or equal to 4.0 seconds, the part turns off or enters sleep mode.

Table 13. PWRON configuration

PWRON_CFG	Mode
0	PWRON pin HIGH = ON PWRON pin LOW = OFF or sleep mode
1	PWRON pin pulled LOW momentarily = ON PWRON pin LOW for 4.0 seconds = OFF or sleep mode

6.1.2.3 I^2C address configuration

The I^2C device address can be programmed from 0x08 to 0x0F. This allows flexibility to change the I^2C address to avoid bus conflicts. Address bit, I2C_SLV_ADDR[3] in OTP_I2C_ADDR register is hard coded to “1” while the lower three LSBs of the I^2C address (I2C_SLV_ADDR[2:0]) are programmable as shown in Table 14.

Table 14. I^2C address configuration

I2C_SLV_ADDR[3] hard coded	I2C_SLV_ADDR[2:0]	I^2C device address (Hex)
1	000	0x08
1	001	0x09
1	010	0x0A
1	011	0x0B
1	100	0x0C
1	101	0x0D
1	110	0x0E
1	111	0x0F

6.1.2.4 Soft start ramp rate

The start-up ramp rate or soft start ramp rate can be chosen from the same options as shown in 6.4.4.2.1 Dynamic voltage scaling, page 34.

6.1.3 OTP prototyping

Before permanently programming fuses, it is possible to test the desired configuration by using the “try before buy” feature. With this feature, the configuration is loaded from the OTP registers. These registers merely serve as temporary storage for the values to be written to the fuses, for the values read from the fuses, or for the values read from the default configuration. To avoid confusion, these registers are referred to as the TBBOTP registers. The portion of the register map concerning OTP is shown in Table 136 and Table 137.

The contents of the TBBOTP registers are initialized to zero when a valid VIN is first applied. The values then loaded into the TBBOTP registers depend on the setting of the VDDOTP pin and on the value of the TBB_POR and FUSE_POR bits. Refer to Table 15.

- If VDDOTP = VCOREDIG (1.5 V), the values are loaded from the default configuration.
- If VDDOTP = 0.0 V, TBB_POR = 0 and FUSE_POR = 1, the values are loaded from the fuses. In the MMPF0100Z, FUSE_POR1, FUSE_POR2, and FUSE_POR3 are XOR’ed into the FUSE_POR_XOR bit. The FUSE_POR_XOR must be 1 for fuses to be loaded. This is achieved by setting any one or all of the FUSE_PORx bits. The XOR function is removed in the MMPF0100AZ. It is required to set all of the FUSE_PORx bits to be able to load the fuses.
- If VDDOTP = 0.0 V, TBB_POR = 0 and FUSE_POR = 0, the TBBOTP registers remain initialized at zero.

The initial value of TBB_POR is always “0”; only when VDDOTP = 0.0 V and TBB_POR is set to “1” are the values from the TBBOTP registers maintained and not loaded from a different source.

The contents of the TBBOTP registers are modified by I^2C. To communicate with I^2C, VIN must be valid and VDDIO, to which SDA and SCL are pulled up, must be powered by a 1.7 V to 3.6 V supply. V_{IN}, or the coin cell voltage must be valid to maintain the contents of the registers. To power on with the contents of the TBBOTP registers, the following conditions must exist; VIN is valid, VDDOTP = 0.0 V, TBB_POR = 1, and there is a valid turn-on event. Refer to the application note AN4536 for an example of prototyping.

6.1.4 Reading OTP fuses

As described in the previous section, the contents of the fuses are loaded to the TBBOTP registers when the following conditions are met; VIN is valid, VDDOTP = 0.0 V, TBB_POR = 0 and FUSE_POR = 1. If ECC were enabled at the time the fuses were programmed, the error corrected values can be loaded into the TBBOTP registers if desired. Once the fuses are loaded and a turn-on event occurs, the PMIC powers on with the configuration programmed in the fuses. For more details on reading the OTP fuses, see application note AN4536.

6.1.5 Programming OTP fuses

The programmable parameters are shown in the TBBOTP registers in the Table 136. Extended page 1, page 106 of the register map. The PF0100AZ offers ECC, the control registers for which functions are located in Table 137. Extended page 2, page 110 of the register map. There are ten banks of twenty-six fuses each which can be programmed. For more details on programming the OTP fuses, see application note AN4536.

Table 15. Source of start-up sequence

VDDOTP(V)	TBB_POR	FUSE_POR	Start-up sequence
0	0	0	None
0	0	1	OTP fuses
0	1	x	TBBOTP registers
1.5	x	x	Factory defined

6.2 16 MHz and 32 kHz clocks

There are two clocks: a trimmed 16 MHz, RC oscillator and an untrimmed 32 kHz, RC oscillator. The 16 MHz oscillator is specified within -8.0%/+8.0%. The 32 kHz untrimmed clock is only used in the following conditions:

- VIN < UVDET
- All regulators are in sleep mode
- All regulators are in PFM switching mode

A 32 kHz clock, derived from the 16 MHz trimmed clock, is used when accurate timing is needed under the following conditions:

- During start-up, VIN > UVDET
- PWRON_CFG = 1, for power button debounce timing

In addition, when the 16 MHz is active in the on mode, the debounce times in Table 26 are referenced to the 32 kHz derived from the 16 MHz clock. The exceptions are the LOWVINI and PWRONI interrupts, which are referenced to the 32 kHz untrimmed clock.

Table 16. 16 MHz clock specifications

PF0100Z T_A = -40 °C to 85 °C, PF0100AZ T_A = -40 °C to 105 °C, V_{IN} = 2.8 V to 4.5 V, LICELL = 1.8 V to 3.3 V and typical external component values. Typical values are characterized at V_{IN} = 3.6 V, LICELL = 3.0 V, and 25 °C, unless otherwise noted.

Symbol	Parameters	Min.	Typ.	Max.	Units	Notes
$V_{IN16MHz}$	Operating voltage From VIN	2.8	–	4.5	V	
f_{16MHZ}	16 MHz clock frequency	14.7	16	17.2	MHz	
f_{2MHZ}	2.0 MHz clock frequency	1.84	–	2.15	MHz	(27)

Notes

27. The 2.0 MHz clock is derived from the 16 MHz clock.

6.2.1 Clock adjustment

The 16 MHz clock and hence the switching frequency of the regulators, can be adjusted to improve the noise integrity of the system. By changing the factory trim values of the 16 MHz clock, the user may add an offset as small as ±3% of the nominal frequency. Contact your NXP representative for detailed information on this feature.

6.3 Bias and references block description

6.3.1 Internal core voltage references

All regulators use the main bandgap as the reference. The main bandgap is bypassed with a capacitor at VCOREREF. The bandgap and the rest of the core circuitry are supplied from VCORE. The performance of the regulators is directly dependent on the performance of the bandgap. No external DC loading is allowed on VCORE, VCOREDIG, or VCOREREF. VCOREDIG is kept powered as long as there is a valid supply and/or valid coin cell. Table 17 shows the main characteristics of the core circuitry.

Table 17. Core voltages electrical specifications(29)

PF0100Z T_A = -40 °C to 85 °C, PF0100AZ T_A = -40 °C to 105 °C, V_{IN} = 2.8 V to 4.5 V, LICELL = 1.8 V to 3.3 V, and typical external component values. Typical values are characterized at V_{IN} = 3.6 V, LICELL = 3.0 V, and 25 °C, unless otherwise noted.

Symbol	Parameters	Min.	Typ.	Max.	Units	Notes
VCOREDIG (digital core supply)						
$V_{COREDIG}$	Output voltage On mode (28) Coin cell mode and off	 – –	 1.5 1.3	 – –	V	
VCORE (analog core supply)						
V_{CORE}	Output voltage On mode and charging (28) Off and Coin cell mode	 – –	 2.775 0.0	 – –	V	

Table 17. Core voltages electrical specifications[29] (continued)

PF0100Z T_A = -40 °C to 85 °C, PF0100AZ T_A = -40 °C to 105 °C, V_{IN} = 2.8 V to 4.5 V, LICELL = 1.8 V to 3.3 V, and typical external component values. Typical values are characterized at V_{IN} = 3.6 V, LICELL = 3.0 V, and 25 °C, unless otherwise noted.

Symbol	Parameters	Min.	Typ.	Max.	Units	Notes
VCOREREF (bandgap / regulator reference)						
$V_{COREREF}$	Output voltage [28]	–	1.2	–	V	
$V_{COREREFACC}$	Absolute accuracy	–	0.5	–	%	
$V_{COREREFTACC}$	Temperature drift	–	0.25	–	%	

Notes

28. 3.0 V < V_{IN} < 4.5 V, no external loading on VCOREDIG, VCORE, or VCOREREF. Extended operation down to UVDET, but no system malfunction.
29. For information only

6.3.1.1 External components

Table 18. External components for core voltages

Regulator	Capacitor value (µF)
VCOREDIG	1.0
VCORE	1.0
VCOREREF	0.22

6.3.2 VREFDDR voltage reference

VREFDDR is an internal PMOS half supply voltage follower capable of supplying up to 10 mA. The output voltage is at one half the input voltage. Its typically used as the reference voltage for DDR memories. A filtered resistor divider is utilized to create a low frequency pole. This divider uses a voltage follower to drive the load.

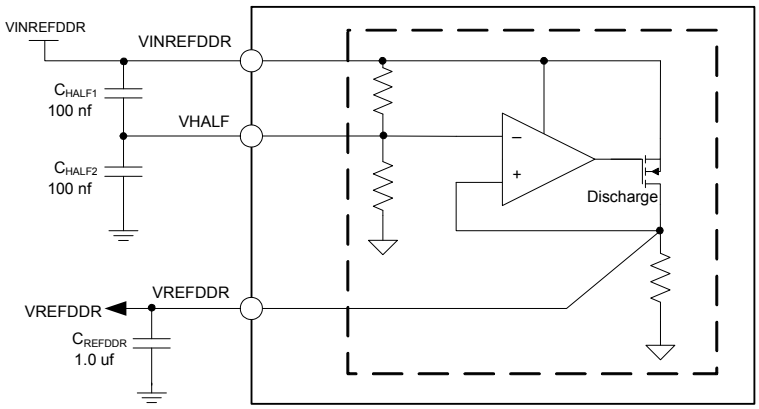

Figure 7. VREFDDR block diagram

6.3.2.1 VREFDDR control register

The VREFDDR voltage reference is controlled by a single bit in VREFDDCRTL register in Table 19.

Table 19. Register VREFDDCRTL - ADDR 0x6A

Name	Bit #	R/W	Default	Description
UNUSED	3:0	–	0x00	unused
VREFDDREN	4	R/W	0x00	Enable or disables VREFDDR output voltage 0 = VREFDDR disabled 1 = VREFDDR enabled
UNUSED	7:5	–	0x00	unused

6.3.2.1.1 External components

Table 20. VREFDDR external components [30]

Capacitor	Capacitance (µF)
VINREFDDR[31] to VHALF	0.1
VHALF to GND	0.1
VREFDDR	1.0

Notes
30. Use X5R or X7R capacitors.
31. VINREFDDR to GND, 1.0 µF minimum capacitance is provided by buck regulator output.

6.3.2.1.2 VREFDDR specifications

Table 21. VREFDDR electrical characteristics

PF0100Z T_A = -40 °C to 85 °C, PF0100AZ T_A = -40 °C to 105 °C, V_{IN} = 3.6 V, I_{REFDDR} = 0.0 mA, $V_{INREFDDR}$ = 1.5 V and typical external component values, unless otherwise noted. Typical values are characterized at V_{IN} = 3.6 V, I_{REFDDR} = 0.0 mA, $V_{INREFDDR}$ = 1.5 V, and 25 °C, unless otherwise noted.

Symbol	Parameter	Min.	Typ.	Max.	Unit	Notes
VREFDDR						
$V_{INREFDDR}$	Operating input voltage range	1.2	–	1.8	V	
I_{REFDDR}	Operating load current range	0.0	–	10	mA	
$I_{REFDDRLIM}$	Current limit I_{REFDDR} when V_{REFDDR} is forced to $V_{INREFDDR}/4$	10.5	15	25	mA	
$I_{REFDDRQ}$	Quiescent current	–	8.0	–	µA	[32]
Active Mode – DC						
V_{REFDDR}	Output voltage 1.2 V < $V_{INREFDDR}$ < 1.8 V 0.0 mA < I_{REFDDR} < 10 mA	–	$V_{INREFDDR}/2$	–	V	
$V_{REFDDRTOL}$	Output voltage tolerance 1.2 V < $V_{INREFDDR}$ < 1.8 V 0.6 mA ≤ I_{REFDDR} ≤ 10 mA T_A = -40 °C to 85 °C T_A = -40 °C to 105 °C (PF0100AZ only)	 –1.0 -1.2	 – –	 1.0 1.2	%	
$V_{REFDDRLOR}$	Load regulation 1.0 mA < I_{REFDDR} < 10 mA 1.2 V < $V_{INREFDDR}$ < 1.8 V	–	0.40	–	mV/mA	

Table 21. VREFDDR electrical characteristics (continued)

PF0100Z T_A = -40 °C to 85 °C, PF0100AZ T_A = -40 °C to 105 °C, V_{IN} = 3.6 V, I_{REFDDR} = 0.0 mA, $V_{INREFDDR}$ = 1.5 V and typical external component values, unless otherwise noted. Typical values are characterized at V_{IN} = 3.6 V, I_{REFDDR} = 0.0 mA, $V_{INREFDDR}$ = 1.5 V, and 25 °C, unless otherwise noted.

Symbol	Parameter	Min.	Typ.	Max.	Unit	Notes
Active mode – AC						
$t_{ONREFDDR}$	Turn-on Time Enable to 90% of end value $V_{INREFDDR}$ = 1.2 V, 1.8 V I_{REFDDR} = 0.0 mA	–	–	100	µs	
$t_{OFFREFDDR}$	Turn-off time Disable to 10% of initial value $V_{INREFDDR}$ = 1.2 V, 1.8 V I_{REFDDR} = 0.0 mA	–	–	10	ms	
$V_{REFDDROSH}$	Start-up overshoot $V_{INREFDDR}$ = 1.2 V, 1.8 V I_{REFDDR} = 0.0 mA	–	1.0	6.0	%	
$V_{REFDDRTLR}$	Transient load response $V_{INREFDDR}$ = 1.2 V, 1.8 V	–	5.0	–	mV	

Notes

32. When VREFDDR is off there is a quiescent current of 1.5 µA typical.

6.4 Power generation

6.4.1 Modes of operation

The operation of the PF0100Z can be reduced to five states, or modes: on, off, sleep, standby, and coin cell. Figure 8 shows the state diagram of the PF0100Z, along with the conditions to enter and exit from each state.

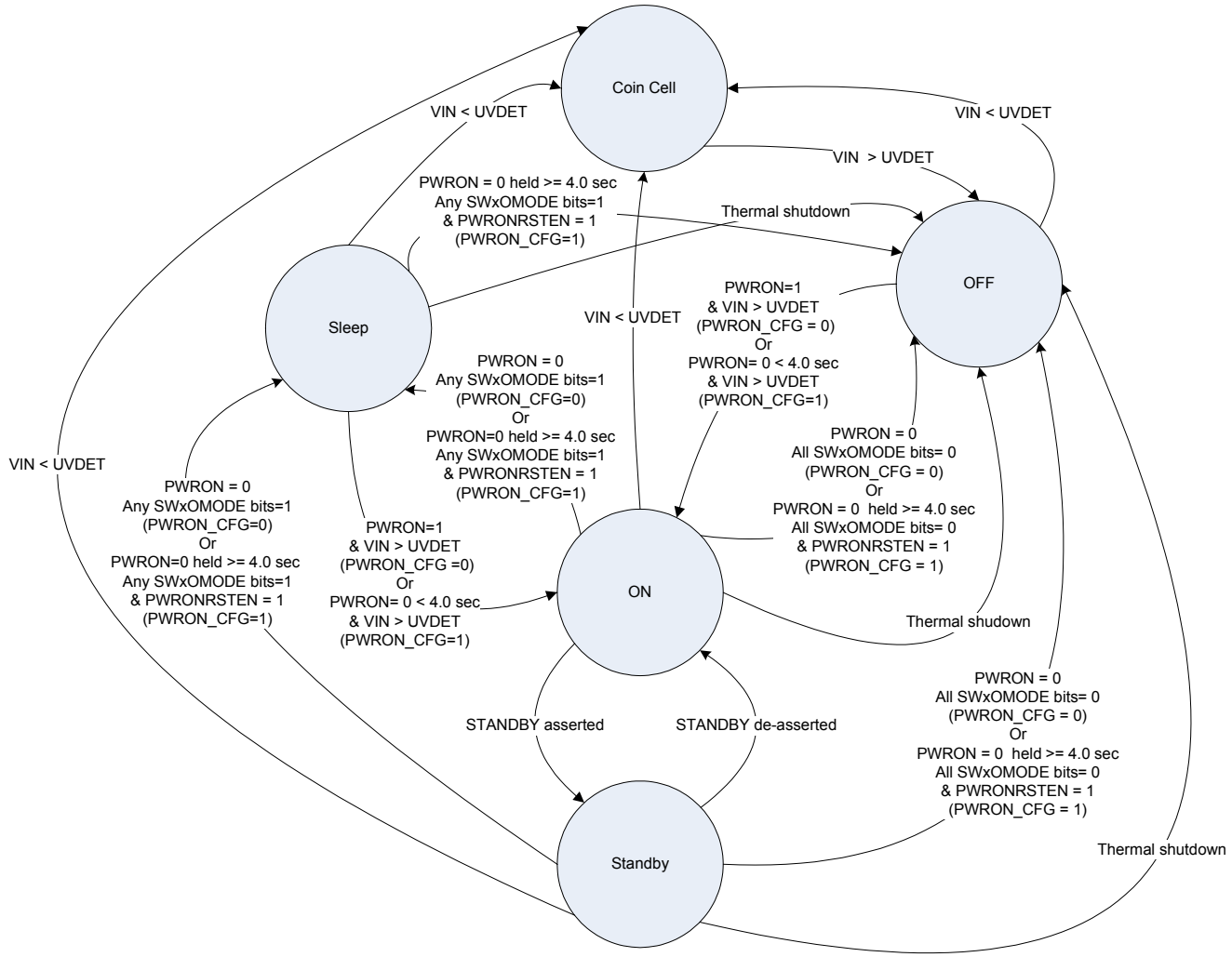

Figure 8. State diagram

To complement the state diagram in Figure 8, a description of the states is provided in following sections. Note that V_{IN} must exceed the rising UVDET threshold to allow a power up. Refer to Table 28 for the UVDET thresholds. Additionally, I^2C control is not possible in the coin cell mode and the interrupt signal, INTB, is only active in sleep, standby, and on states.

6.4.1.1 On mode

The PF0100Z enters the on mode after a turn-on event. RESETBMCU is de-asserted, high, in this mode of operation.

6.4.1.2 Off mode

The PF0100Z enters the off mode after a turn-off event. A thermal shutdown event also forces the PF0100Z into the off mode. Only VCOREDIG and VSNVS are powered in the mode of operation. To exit the off mode, a valid turn-on event is required. RESETBMCU is asserted, low, in this mode.

6.4.1.3 Standby mode

- Depending on STANDBY pin configuration, standby is entered when the STANDBY pin is asserted. This is typically used for low-power mode of operation.
- When STANDBY is de-asserted, standby mode is exited.

A product may be designed to go into a low-power mode after periods of inactivity. The STANDBY pin is provided for board level control of going in and out of such deep sleep modes (DSM).

When a product is in DSM, it may be able to reduce the overall platform current by lowering the regulator output voltage, changing the operating mode of the regulators, or disabling some regulators. The configuration of the regulators in standby is pre-programmed through the I^2C interface.

Note that the STANDBY pin is programmable for active high or active low polarity, and decoding of a Standby event takes into account the programmed input polarity, as shown in Table 22. When the PF0100Z is powered up first, regulator settings for the standby mode are mirrored from the regulator settings for the on mode. To change the STANDBY pin polarity to active low, set the STANDBYINV bit via software first, and then change the regulator settings for standby mode as required. For simplicity, STANDBY is generally referred to as active high throughout this document.

Table 22. Standby pin and polarity control

STANDBY (pin)[34]	STANDBYINV (I^2C bit)[35]	STANDBY control [33]
0	0	0
0	1	1
1	0	1
1	1	0

Notes
33. STANDBY = 0: System is not in standby, STANDBY = 1: System is in standby
34. The state of the STANDBY pin only has influence in on mode.
35. Bit 6 in power control register (ADDR - 0x1B)

Since STANDBY pin activity is driven asynchronously to the system, a finite time is required for the internal logic to qualify and respond to the pin level changes. A programmable delay is provided to hold off the system response to a Standby event. This allows the processor and peripherals some time after a standby instruction was received to terminate processes to facilitate seamless entering into standby mode.

When enabled (STBYDLY = 01, 10, or 11) per Table 23, STBYDLY delays the standby initiated response for the entire IC, until the STBYDLY counter expires. An allowance should be made for three additional 32 k cycles required to synchronize the standby event.

Table 23. STANDBY delay - initiated response

STBYDLY[1:0][36]	Function
00	No delay
01	One 32 k period (default)
10	Two 32 k periods
11	Three 32 k periods

Notes
36. Bits [5:4] in Power Control Register (ADDR - 0x1B)

6.4.1.4 Sleep mode

- Depending on the PWRON pin configuration, sleep mode is entered when PWRON is de-asserted and SWxOMODE bit is set.
- To exit sleep mode, assert the PWRON pin.

In the sleep mode, the regulator uses the set point as programmed by SW1xOFF[5:0] for SW1A/B/C and by SWxOFF[6:0] for SW2, SW3A/B, and SW4. The activated regulators maintain settings for this mode and voltage until the next turn-on event. Table 24 shows the control bits in sleep mode. During sleep mode, interrupts are active and the INTB pin reports any unmasked fault event.

Table 24. Regulator mode control

SWxOMODE	Off operational mode (sleep) [37]
0	Off
1	PFM

Notes

37. For sleep mode, an activated switching regulator, should use the off mode set point as programmed by SW1xOFF[5:0] for SW1A/B/C and SWxOFF[6:0] for SW2, SW3A/B, and SW4.

6.4.1.5 Coin cell mode

In the coin cell state, the coin cell is the only valid power source (V_{IN} = 0.0 V) to the PMIC. No turn-on event is accepted in the coin cell state. Transition to the OFF state requires that V_{IN} surpasses UVDET threshold. RESETBMCU is held low in this mode.

If the coin cell is depleted, a complete system reset occurs. At the next application of power and the detection of a turn-on event, the system is re-initialized with all I^2C bits including those reset on COINPORB, which are restored to their default states.

6.4.2 State machine flow summary

Table 25 provides a summary matrix of the PF0100Z flow diagram to show the conditions needed to transition from one state to another.

Table 25. State machine flow summary

STATE		Next state				
		OFF	Coin cell	Sleep	Standby	ON
Initial state	OFF	X	V_{IN} < UVDET	X	X	PWRON_CFG = 0 PWRON = 1 & V_{IN} > UVDET or PWRON_CFG = 1 PWRON = 0 < 4.0 s & V_{IN} > UNDET
	Coin cell	V_{IN} > UVDET	X	X	X	X
	Sleep	Thermal Shutdown PWRON_CFG = 1 PWRON = 0 ≥ 4.0 s Any SWxOMODE = 1 & PWRONRSTEN = 1	V_{IN} < UVDET	X	X	PWRON_CFG = 0 PWRON = 1 & V_{IN} > UVDET or PWRON_CFG = 1 PWRON = 0 < 4.0 s & V_{IN} > UNDET
	Standby	Thermal Shutdown PWRON_CFG = 0 PWRON = 0 All SWxOMODE = 0 or PWRON_CFG = 1 PWRON = 0 ≥ 4.0 s All SWxOMODE = 0 & PWRONRSTEN = 1	V_{IN} < UVDET	PWRON_CFG = 0 PWRON = 0 Any SWxOMODE = 1 or PWRON_CFG = 1 PWRON = 0 ≥ 4.0 s Any SWxOMODE = 1 & PWRONRSTEN = 1	X	Standby de-asserted
	ON	Thermal Shutdown PWRON_CFG = 0 PWRON = 0 All SWxOMODE = 0 or PWRON_CFG = 1 PWRON = 0 ≥ 4.0 s All SWxOMODE = 0 & PWRONRSTEN = 1	V_{IN} < UVDET	PWRON_CFG = 0 PWRON = 0 Any SWxOMODE = 1 or PWRON_CFG = 1 PWRON = 0 ≥ 4.0 s Any SWxOMODE = 1 & PWRONRSTEN = 1	Standby asserted	X

6.4.2.1 Turn on events

From off and sleep modes, the PMIC is powered on by a turn-on event. The type of turn-on event depends on the configuration of PWRON. PWRON may be configured as an active high when PWRON_CFG = 0, or as the input of a mechanical switch when PWRON_CFG = 1. V_{IN} must be greater than UVDET for the PMIC to turn-on. When PWRON is configured as an active high and PWRON is high (pulled up to VSNVS) before V_{IN} is valid, a V_{IN} transition from 0.0 V to a voltage greater than UVDET is also a turn-on event. See the state diagram, Figure 8, and the Table 25 for more details. Any regulator enabled in the sleep mode remains enabled when transitioning from sleep to on, the regulator does not turn off and then on again to match the start-up sequence. The following is a more detailed description of the PWRON configurations:

- If PWRON_CFG = 0, the PWRON signal is high and V_{IN} > UVDET, the PMIC turns on; the interrupt and sense bits, PWRONI and PWRONS respectively, are set.
- If PWRON_CFG = 1, V_{IN} > UVDET and PWRON transitions from high to low, the PMIC turns on; the interrupt and sense bits, PWRONI and PWRONS respectively, are set.

The sense bit shows the real time status of the PWRON pin. In this configuration, the PWRON input can be a mechanical switch debounced through a programmable debouncer, PWRONDBNC[1:0], to avoid a response to a very short (unintentional) key press. The interrupt is generated for both the falling and the rising edge of the PWRON pin. By default, a 30 ms interrupt debounce is applied to both falling and rising edges. The falling edge debounce timing can be extended with PWRONDBNC[1:0] as defined in Table 26. The interrupt is cleared by software, or when cycling through the off mode.

Table 26. PWRON hardware debounce bit settings

Bits	State	Turn on debounce (ms)	Falling edge INT debounce (ms)	Rising edge INT debounce (ms)
PWRONDBNC[1:0]	00	0.0	31.25	31.25
	01	31.25	31.25	31.25
	10	125	125	31.25
	11	750	750	31.25

Notes
38. The sense bit, PWRONS, is not debounced and follows the state of the PWRON pin.

6.4.2.2 Turn off events

6.4.2.2.1 PWRON pin

The PWRON pin is used to power off the PF0100Z. The PWRON pin can be configured with OTP to power off the PMIC under the following two conditions:

1. PWRON_CFG bit = 0, SWxOMODE bit = 0 and PWRON pin is low.
2. PWRON_CFG bit = 1, SWxOMODE bit = 0, PWRONRSTEN = 1 and PWRON is held low for longer than 4.0 seconds. Alternatively, the system can be configured to restart automatically by setting the RESTARTEN bit.

6.4.2.2.2 Thermal protection

If the die temperature surpasses a given threshold, the thermal protection circuit powers off the PMIC to avoid damage. A turn-on event does not power on the PMIC while it is in thermal protection. The part remains in off mode until the die temperature decreases below a given threshold. There are no specific interrupts related to this other than the warning interrupt. See 4.2.1 Power dissipation, page 10 for more detailed information.

6.4.2.2.3 Undervoltage detection

When the voltage at VIN drops below the undervoltage falling threshold, UVDET, the state machine transitions to the coin cell mode.

6.4.3 Power tree

The PF0100Z PMIC features six buck regulators, one boost regulator, six general purpose LDOs, one switch/LDO combination, and a DDR voltage reference to supply voltages for the application processor and peripheral devices. The buck regulators as well as the boost regulator are supplied directly from the main input supply (V_{IN}). The inputs to all of the buck regulators must be tied to VIN, whether they are powered on or off. The six general use LDO regulators are directly supplied from the main input supply or from the switching regulators depending on the application requirements. Since VREFDDR is intended to provide DDR memory reference voltage, it should be supplied by any rail supplying voltage to DDR memories; the typical application recommends the use of SW3 as the input supply for VREFDDR. VSNVS is supplied by either the main input supply or the coin cell. Refer to Table 27 for a summary of all power supplies provided by the PF0100Z.

Table 27. Power tree summary

Supply	Output voltage (V)	Step size (mV)	Maximum load current (mA)
SW1A/B	0.3 - 1.875	25	2500
SW1C	0.3 - 1.875	25	2000
SW2	0.4 - 3.3	25/50	2000 (40)
SW3A/B	0.4 - 3.3	25/50	1250 (39)
SW4	0.5*SW3A_OUT, 0.4 - 3.3	25/50	1000
SWBST	5.00/5.05/5.10/5.15	50	600
VGEN1	0.80 – 1.55	50	100
VGEN2	0.80 – 1.55	50	250
VGEN3	1.8 – 3.3	100	100
VGEN4	1.8 – 3.3	100	350
VGEN5	1.8 – 3.3	100	100
VGEN6	1.8 – 3.3	100	200
VSNVS	1.0 - 3.0	NA	0.4
VREFDDR	0.5*SW3A_OUT	NA	10

Notes

39. Current rating per independent phase, when SW3A/B is set in single or dual phase, current capability is up to 2500 mA.
40. SW2 capable of 2500 mA in NP/F9/FA versions

Figure 9 shows a simplified power map with various recommended options to supply the different block within the PF0100Z, as well as the typical application voltage domain on the i.MX 6X processor. Note that each application power tree is dependent upon the system's voltage and current requirements, therefore a proper input voltage should be selected for the regulators.

The minimum operating voltage for the main V_{IN} supply is 2.8 V, for lower voltages proper operation is not guaranteed. However at initial power up, the input voltage must surpass the rising UVDET threshold before proper operation is guaranteed. Refer to the representative tables and text specifying each supply for information on performance metrics and operating ranges. Table 28 summarizes the UVDET thresholds.

Table 28. UVDET threshold

UVDET threshold	V_{IN}
Rising	3.1 V
Falling	2.65 V

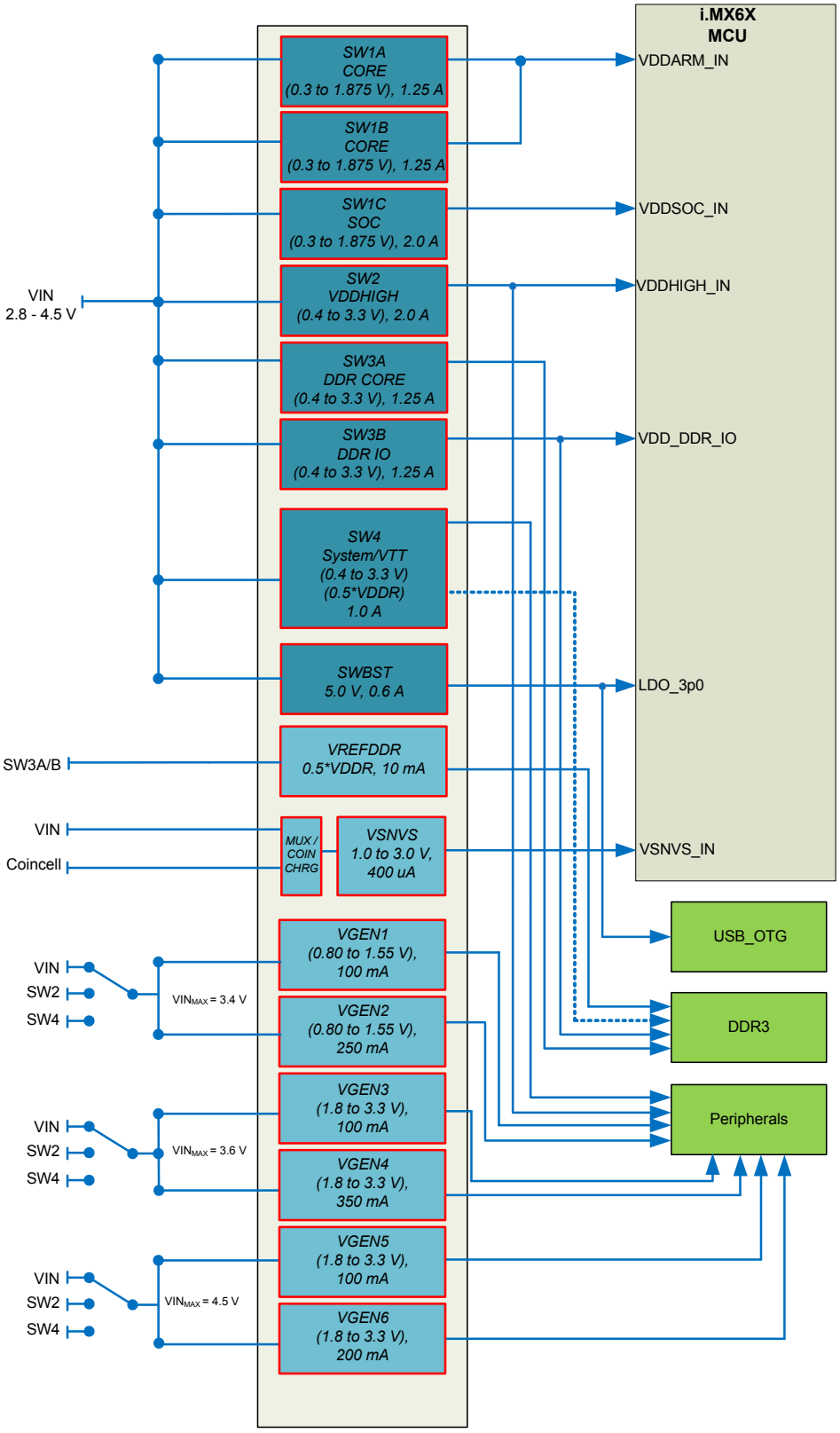

Figure 9. PF0100Z typical power map

6.4.4 Buck regulators

Each buck regulator is capable of operating in PFM, APS, and PWM switching modes.

6.4.4.1 Current limit

Each buck regulator has a programmable current limit. In an overcurrent condition, the current is limited cycle-by-cycle. If the current limit condition persists for more than 8.0 ms, a fault interrupt is generated.

6.4.4.2 General control

To improve system efficiency the buck regulators can operate in different switching modes. Changing between switching modes can occur by any of the following means: I^2C programming, exiting/entering the standby mode, exiting/entering sleep mode, and load current variation. Available switching modes for buck regulators are presented in Table 29.

Table 29. Switching mode description

Mode	Description
OFF	The regulator is switched off and the output voltage is discharged.
PFM	In this mode, the regulator is always in PFM mode, which is useful at light loads for optimized efficiency.
PWM	In this mode, the regulator is always in PWM mode operation regardless of load conditions.
APS	In this mode, the regulator moves automatically between pulse skipping mode and PWM mode depending on load conditions.

During soft-start of the buck regulators, the controller transitions through the PFM, APS, and PWM switching modes. 3.0 ms (typical) after the output voltage reaches regulation, the controller transitions to the selected switching mode. Depending on the particular switching mode selected, additional ripple may be observed on the output voltage rail as the controller transitions between switching modes. Contact your NXP representative for application considerations if you are using load switches in series with the buck regulator outputs. Table 30 summarizes the buck regulator programmability for normal and standby modes.

Table 30. Regulator mode control

SWxMODE[3:0]	Normal mode	Standby mode
0000	Off	Off
0001	PWM	Off
0010	Reserved	Reserved
0011	PFM	Off
0100	APS	Off
0101	PWM	PWM
0110	PWM	APS
0111	Reserved	Reserved
1000	APS	APS
1001	Reserved	Reserved
1010	Reserved	Reserved
1011	Reserved	Reserved
1100	APS	PFM
1101	PWM	PFM
1110	Reserved	Reserved
1111	Reserved	Reserved

Transitioning between normal and standby modes can affect a change in switching modes as well as output voltage. The rate of the output voltage change is controlled by the dynamic voltage scaling (DVS), explained in 6.4.4.2.1 Dynamic voltage scaling, page 34. For each regulator, the output voltage options are the same for normal and standby modes.

When in standby mode, the regulator outputs the voltage programmed in its standby voltage register and operates in the mode selected by the SWxMODE[3:0] bits. Upon exiting standby mode, the regulator returns to its normal switching mode and its output voltage programmed in its voltage register.

Any regulators whose SWxOMODE bit is set to “1” enters sleep mode if a PWRON turn-off event occurs, and any regulator whose SWxOMODE bit is set to “0” is turned off. In sleep mode, the regulator outputs the voltage programmed in its off (sleep) voltage register and operates in the PFM mode. The regulator exits the sleep mode when a turn-on event occurs. Any regulator whose SWxOMODE bit is set to “1” remains on and changes to its normal configuration settings when exiting the sleep state to the on state. Any regulator whose SWxOMODE bit is set to “0” powers up with the same delay in the start-up sequence as when powering on from off. At this point, the regulator returns to its default ON state output voltage and switch mode settings.

Table 24 shows the control bits in sleep mode. When sleep mode is activated by the SWxOMODE bit, the regulator uses the set point as programmed by SW1xOFF[5:0] for SW1A/B/C and by SWxOFF[6:0] for SW2, SW3A/B, and SW4.

6.4.4.2.1 Dynamic voltage scaling

To reduce overall power consumption, processor core voltages can be varied depending on the mode or activity level of the processor.

1. Normal operation: The output voltage is selected by I^2C bits SW1x[5:0] for SW1A/B/C and SWx[6:0] for SW2, SW3A/B, and SW4. A voltage transition initiated by I^2C is governed by the DVS stepping rates shown in Table 33 and Table 34.
2. Standby mode: The output voltage can be higher, or lower than in normal operation, but is typically selected to be the lowest state retention voltage of a given processor; it is selected by I^2C bits SW1xSTBY[5:0] for SW1A/B/C and by bits SWxSTBY[6:0] for SW2, SW3A/B, and SW4. Voltage transitions initiated by a standby event are governed by the SW1xDVSSPEED[1:0] and SWxDVSSPEED[1:0] I^2C bits shown in Table 33 and Table 34, respectively.
3. Sleep mode: The output voltage can be higher or lower than in normal operation, but is typically selected to be the lowest state retention voltage of a given processor; it is selected by I^2C bits SW1xOFF[5:0] for SW1A/B/C and by bits SWxOFF[6:0] for SW2, SW3A/B, and SW4. Voltage transitions initiated by a turn-off event are governed by the SW1xDVSSPEED[1:0] and SWxDVSSPEED[1:0] I^2C bits shown in Table 33 and Table 34, respectively.

Table 31, Table 32, Table 33, and Table 34 summarize the set point control and DVS time stepping applied to all regulators.

Table 31. DVS control logic for SW1A/B/C

STANDBY	Set point selected by
0	SW1x[5:0]
1	SW1xSTBY[5:0]

Table 32. DVS control logic for SW2, SW3A/B, and SW4

STANDBY	Set point selected by
0	SWx[6:0]
1	SWxSTBY[6:0]

Table 33. DVS speed selection for SW1A/B/C

SW1xDVSSPEED[1:0]	Function
00	25 mV step each 2.0 µs
01 (default)	25 mV step each 4.0 µs
10	25 mV step each 8.0 µs
11	25 mV step each 16 µs

Table 34. DVS Speed Selection for SW2, SW3A/B, and SW4

SWxDVSSPEED[1:0]	Function SWx[6] = 0 or SWxSTBY[6] = 0	Function SWx[6] = 1 or SWxSTBY[6] = 1
00	25 mV step each 2.0 µs	50 mV step each 4.0 µs
01 (default)	25 mV step each 4.0 µs	50 mV step each 8.0 µs
10	25 mV step each 8.0 µs	50 mV step each 16 µs
11	25 mV step each 16 µs	50 mV step each 32 µs

The regulators have a strong sourcing capability and sinking capability in PWM mode, therefore the fastest rising and falling slopes are determined by the regulator in PWM mode. However, if the regulators are programmed in PFM or APS mode during a DVS transition, the falling slope can be influenced by the load. Additionally, as the current capability in PFM mode is reduced, controlled DVS transitions in PFM mode could be affected. Critically timed DVS transitions are best assured with PWM mode operation.

The following diagram shows the general behavior for the regulators when initiated with I^2C programming, or standby control. During the DVS period the overcurrent condition on the regulator should be masked.

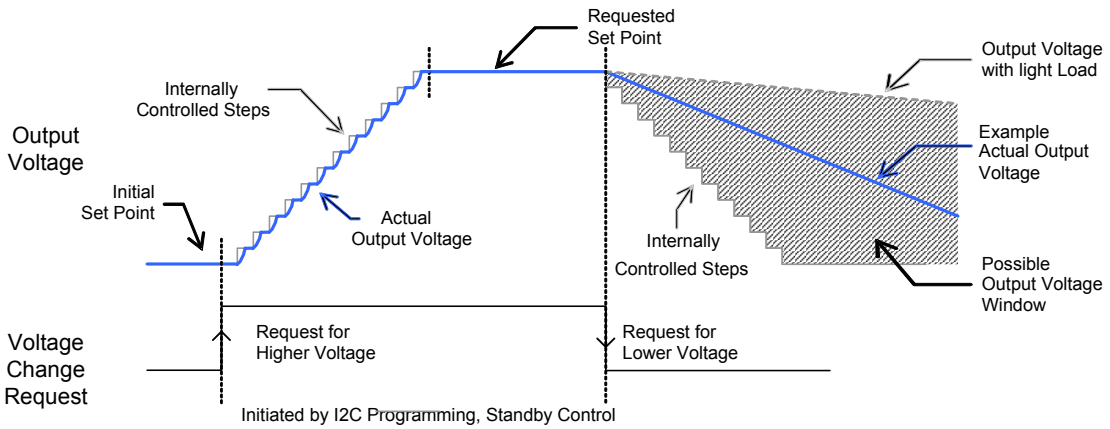

Figure 10. Voltage stepping with DVS

6.4.4.2.2 Regulator phase clock

The SWxPHASE[1:0] bits select the phase of the regulator clock as shown in Table 35. By default, each regulator is initialized at 90 ° out of phase with respect to each other. For example, SW1x is set to 0 °, SW2 is set to 90 °, SW3A/B is set to 180 °, and SW4 is set to 270 ° by default at power up.

Table 35. Regulator phase clock selection

SWxPHASE[1:0]	Phase of clock sent to regulator (degrees)
00	0
01	90
10	180
11	270

The SWxFREQ[1:0] register is used to set the desired switching frequency for each one of the buck regulators. Table 37 shows the selectable options for SWxFREQ[1:0]. For each frequency, all phases will be available, this allows regulators operating at different frequencies to have different relative switching phases. However, not all combinations are practical. For example, 2.0 MHz, 90 ° and 4.0 MHz, 180 ° are the same in terms of phasing. Table 36 shows the optimum phasing when using more than one switching frequency.

Table 36. Optimum phasing

Frequencies	Optimum phasing
1.0 MHz 2.0 MHz	0 ° 180 °
1.0 MHz 4.0 MHz	0 ° 180 °
2.0 MHz 4.0 MHz	0 ° 180 °
1.0 MHz 2.0 MHz 4.0 MHz	0 ° 90 ° 90 °

Table 37. Regulator frequency configuration

SWxFREQ[1:0]	Frequency
00	1.0 MHz
01	2.0 MHz
10	4.0 MHz
11	Reserved

6.4.4.2.3 Programmable maximum current

The maximum current, $ISWx_{MAX}$, of each buck regulator is programmable. This allows the use of smaller inductors where lower currents are required. Programmability is accomplished by choosing the number of paralleled power stages in each regulator. The SWx_PWRSTG[2:0] bits in Table 137. Extended page 2, page 110 of the register map control the number of power stages. See Table 38 for the programmable options. Bit[0] must always be enabled to ensure the stage with the current sensor is chosen. The default setting, SWx_PWRSTG[2:0] = 111, represents the highest maximum current. The current limit for each option is also scaled by the percentage of power stages that are enabled.

Table 38. Programmable current configuration

Regulators	Control bits			% of power stages enabled	Rated current (A)
SW1AB	SW1AB_PWRSTG[2:0]				$ISW1AB_{MAX}$
	0	0	1	40%	1.0
	0	1	1	80%	2.0
	1	0	1	60%	1.5
	1	1	1	100%	2.5
SW1C	SW1C_PWRSTG[2:0]				$ISW1C_{MAX}$
	0	0	1	43%	0.9
	0	1	1	58%	1.2
	1	0	1	86%	1.7
	1	1	1	100%	2.0
SW2	SW2_PWRSTG[2:0]				$ISW2_{MAX}$
	0	0	1	38%	0.75
	0	1	1	75%	1.5
	1	0	1	63%	1.25
	1	1	1	100%	2.0

Table 38. Programmable current configuration (continued)

Regulators	Control bits			% of power stages enabled	Rated current (A)
SW3A	SW3A_PWRSTG[2:0]				$ISW3A_{MAX}$
	0	0	1	40%	0.5
	0	1	1	80%	1.0
	1	0	1	60%	0.75
	1	1	1	100%	1.25
SW3B	SW3B_PWRSTG[2:0]				$ISW3B_{MAX}$
	0	0	1	40%	0.5
	0	1	1	80%	1.0
	1	0	1	60%	0.75
	1	1	1	100%	1.25
SW4	SW4_PWRSTG[2:0]				$ISW4_{MAX}$
	0	0	1	50%	0.5
	0	1	1	75%	0.75
	1	0	1	75%	0.75
	1	1	1	100%	1.0

6.4.4.3 SW1A/B/C

SW1/A/B/C are 2.5 A to 4.5 A buck regulators which can be configured in various phasing schemes, depending on the desired cost/performance trade-offs. The following configurations are available:

- SW1A/B/C single phase with one inductor
- SW1A/B as a single phase with one inductor and SW1C in independent mode with one inductor
- SW1A/B as a dual phase with two inductors and SW1C in independent mode with one inductor

The desired configuration is programmed by OTP by using SW1_CONFIG[1:0] bits in the register map Table 136. Extended page 1, page 106, as shown in Table 39.

Table 39. SW1 configuration

SW1_CONFIG[1:0]	Description
00	A/B/C single phase
01	A/B single phase C independent mode
10	A/B dual phase C independent mode
11	Reserved

6.4.4.3.1 SW1A/B/C single phase

In this configuration, all phases A, B, and C, are connected together to a single inductor, thus, providing up to 4.50 A current capability for high current applications. The feedback and all other controls are accomplished by use of pin SW1CFB and SW1C control registers, respectively. Figure 11 shows the connection for SW1A/B/C in single phase mode.

During single phase mode operation, all three phases use the same configuration for frequency, phase, and DVS speed set in the SW1CCONF register. However, the same configuration settings for frequency, phase, and DVS speed setting on SW1AB registers should be used. The SW1FB pin should be left floating in this configuration.

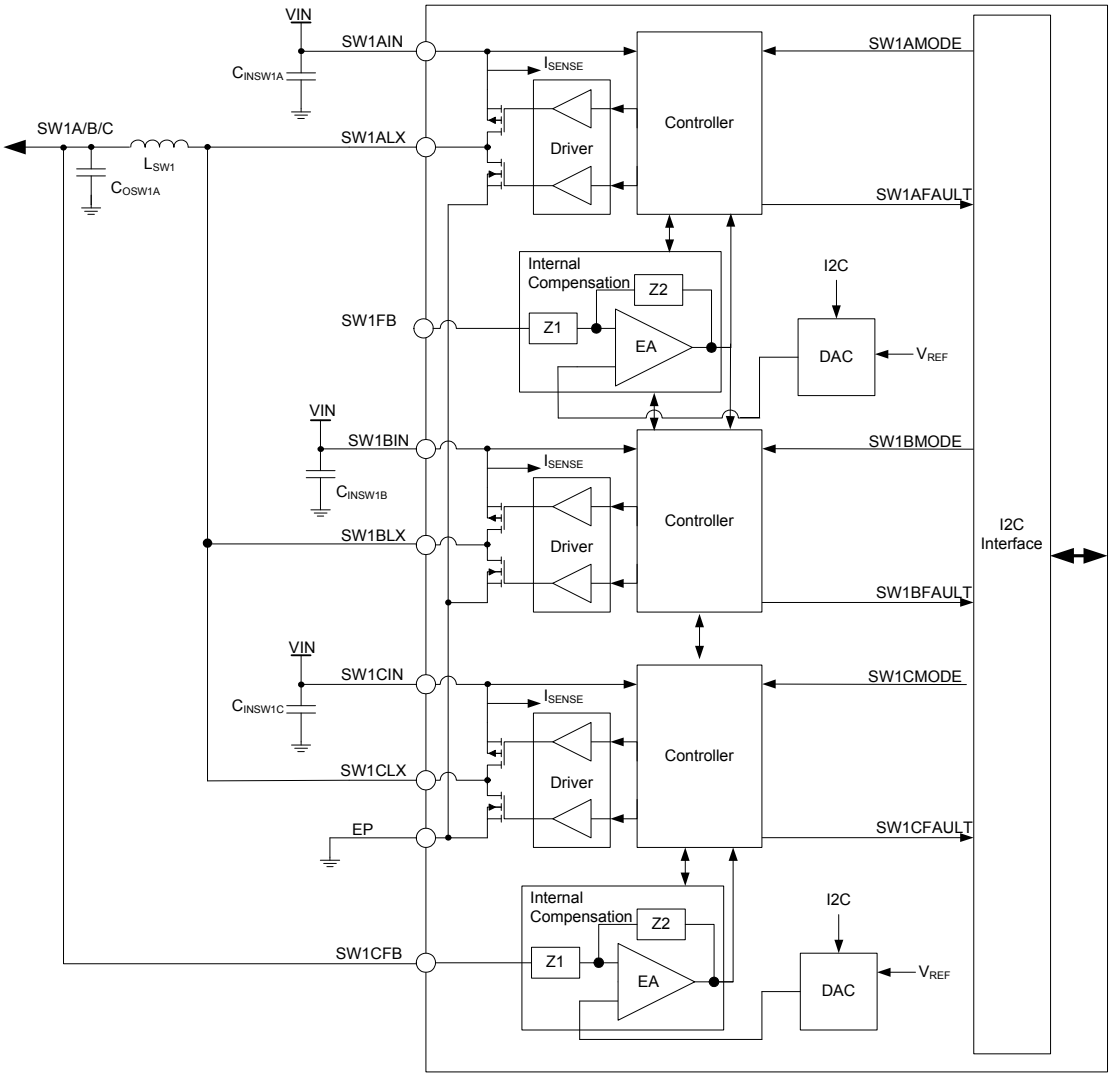

Figure 11. SW1A/B/C single phase block diagram

6.4.4.3.2 SW1A/B single phase - SW1C independent mode

In this configuration, SW1A/B is connected as a single phase with a single inductor, while SW1C is used as an independent output, using its own inductor and configurations parameters. This configuration allows reduced component count by using only one inductor for SW1A/B. As mentioned before, SW1A/B and SW1C operate independently from one another, thus, they can be operated with a different voltage set point for normal, standby, and sleep modes, as well as switching mode selection and on/off control. Figure 12 shows the physical connection for SW1A/B in single phase and SW1C as an independent output.

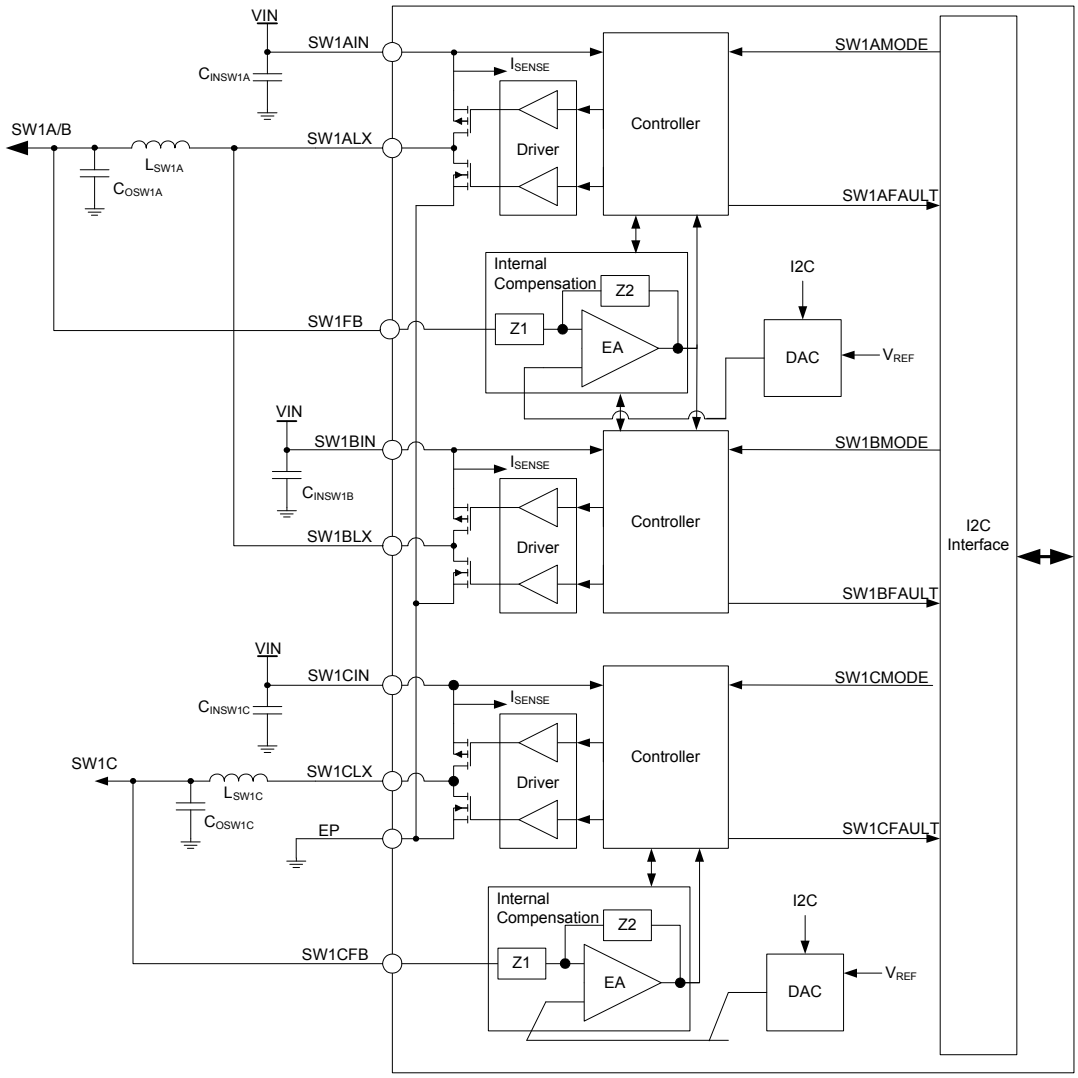

Figure 12. SW1A/B single phase, SW1C independent mode block diagram

Both SW1ALX and SW1BLX nodes operate at the same DVS, frequency, and phase configured by the SW1ABCONF register, while SW1CLX node operates independently, using the configuration in the SW1CCONF register.

6.4.4.3.3 SW1A/B dual phase - SW1C independent mode

In this mode, SW1A/B is connected in dual phase mode using one inductor per switching node, while SW1C is used as an independent output using its own inductor and configuration parameters. This mode provides a smaller output voltage ripple on the SW1A/B output. As mentioned before, SW1A/B and SW1C operate independently from one another, thus, they can be operated with a different voltage set point for normal, standby, and sleep modes, as well as switching mode selection and on/off control. Figure 13 shows the physical connection for SW1A/B in dual phase and SW1C as an independent output.

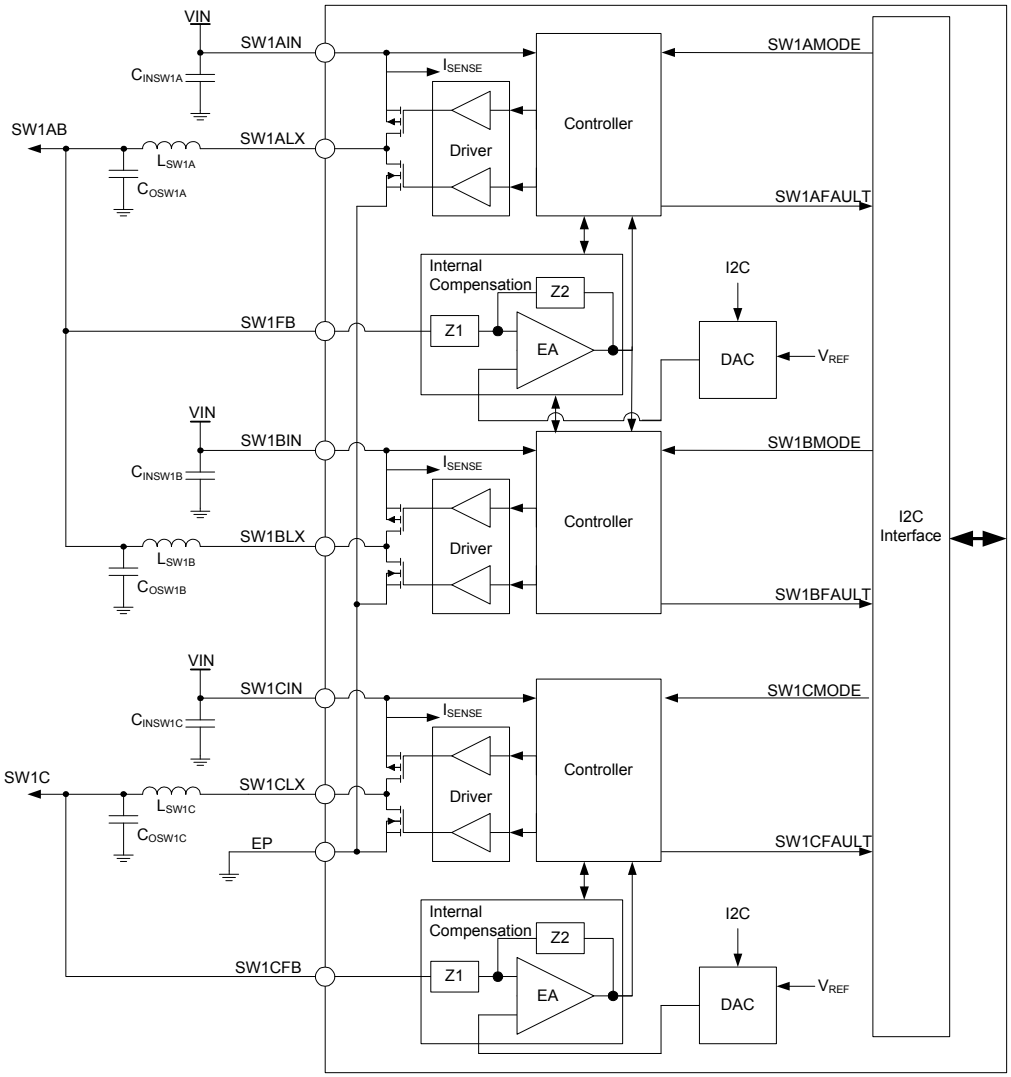

Figure 13. SW1A/B dual phase, SW1C independent mode block diagram

In this mode of operation, SW1ALX and SW1BLX nodes operate automatically at 180 ° phase shift from each other and use the same frequency and DVS configured by SW1ABCONF register, while SW1CLX node operate independently using the configuration in the SW1CCONF register.

6.4.4.3.4 SW1A/B/C setup and control registers

SW1A/B and SW1C output voltages are programmable from 0.300 V to 1.875 V in steps of 25 mV. The output voltage set point is independently programmed for normal, standby, and sleep mode by setting the SW1x[5:0], SW1xSTBY[5:0], and SW1xOFF[5:0] bits respectively. Table 40 shows the output voltage coding for SW1A/B or SW1C.

Note: Voltage set points of 0.6 V and below are not supported.

Table 40. SW1A/B/C output voltage configuration

Set point	SW1x[5:0] SW1xSTBY[5:0] SW1xOFF[5:0]	SW1x output (V)	Set point	SW1x[5:0] SW1xSTBY[5:0] SW1xOFF[5:0]	SW1x output (V)
0	000000	0.3000	32	100000	1.1000
1	000001	0.3250	33	100001	1.1250
2	000010	0.3500	34	100010	1.1500
3	000011	0.3750	35	100011	1.1750
4	000100	0.4000	36	100100	1.2000
5	000101	0.4250	37	100101	1.2250
6	000110	0.4500	38	100110	1.2500
7	000111	0.4750	39	100111	1.2750
8	001000	0.5000	40	101000	1.3000
9	001001	0.5250	41	101001	1.3250
10	001010	0.5500	42	101010	1.3500
11	001011	0.5750	43	101011	1.3750
12	001100	0.6000	44	101100	1.4000
13	001101	0.6250	45	101101	1.4250
14	001110	0.6500	46	101110	1.4500
15	001111	0.6750	47	101111	1.4750
16	010000	0.7000	48	110000	1.5000
17	010001	0.7250	49	110001	1.5250
18	010010	0.7500	50	110010	1.5500
19	010011	0.7750	51	110011	1.5750
20	010100	0.8000	52	110100	1.6000
21	010101	0.8250	53	110101	1.6250
22	010110	0.8500	54	110110	1.6500
23	010111	0.8750	55	110111	1.6750
24	011000	0.9000	56	111000	1.7000
25	011001	0.9250	57	111001	1.7250
26	011010	0.9500	58	111010	1.7500
27	011011	0.9750	59	111011	1.7750
28	011100	1.0000	60	111100	1.8000
29	011101	1.0250	61	111101	1.8250
30	011110	1.0500	62	111110	1.8500
31	011111	1.0750	63	111111	1.8750

Table 41 provides a list of registers used to configure and operate SW1A/B/C and a detailed description on each one of these register is provided in Table 42 through Table 51.

Table 41. SW1A/B/C register summary

Register	Address	Output
SW1ABVOLT	0x20	SW1AB output voltage set point in normal operation
SW1ABSTBY	0x21	SW1AB output voltage set point on standby
SW1ABOFF	0x22	SW1AB output voltage set point on sleep
SW1ABMODE	0x23	SW1AB switching mode selector register
SW1ABCONF	0x24	SW1AB DVS, phase, frequency and ILIM configuration
SW1CVOLT	0x2E	SW1C output voltage set point in normal operation
SW1CSTBY	0x2F	SW1C output voltage set point in standby
SW1COFF	0x30	SW1C output voltage set point in sleep
SW1CMODE	0x31	SW1C switching mode selector register
SW1CCONF	0x32	SW1C DVS, phase, frequency and ILIM configuration

Table 42. Register SW1ABVOLT - ADDR 0x20

Name	Bit #	R/W	Default	Description
SW1AB	5:0	R/W	0x00	Sets the SW1AB output voltage during normal operation mode. See Table 40 for all possible configurations.
UNUSED	7:6	–	0x00	unused

Table 43. Register SW1ABSTBY - ADDR 0x21

Name	Bit #	R/W	Default	Description
SW1ABSTBY	5:0	R/W	0x00	Sets the SW1AB output voltage during standby mode. See Table 40 for all possible configurations.
UNUSED	7:6	–	0x00	unused

Table 44. Register SW1ABOFF - ADDR 0x22

Name	Bit #	R/W	Default	Description
SW1ABOFF	5:0	R/W	0x00	Sets the SW1AB output voltage during sleep mode. See Table 40 for all possible configurations.
UNUSED	7:6	–	0x00	unused

Table 45. Register SW1ABMODE - ADDR 0x23

Name	Bit #	R/W	Default	Description
SW1ABMODE	3:0	R/W	0x80	Sets the SW1AB switching operation mode. See Table 30 for all possible configurations.
UNUSED	4	–	0x00	UNUSED
SW1ABOMODE	5	R/W	0x00	Set status of SW1AB when in sleep mode 0 = OFF 1 = PFM
UNUSED	7:6	–	0x00	unused

Table 46. Register SW1ABCONF - ADDR 0x24

Name	Bit #	R/W	Default	Description
SW1ABILIM	0	R/W	0x00	SW1AB current limit level selection 0 = High level current limit 1 = Low level current limit
UNUSED	1	R/W	0x00	Unused
SW1ABFREQ	3:2	R/W	0x00	SW1A/B switching frequency selector. See Table 37.
SW1ABPHASE	5:4	R/W	0x00	SW1A/B phase clock selection. See Table 35.
SW1ABDVSSPEED	7:6	R/W	0x00	SW1A/B DVS speed selection. See Table 33.

Table 47. Register SW1CVOLT - ADDR 0x2E

Name	Bit #	R/W	Default	Description
SW1C	5:0	R/W	0x00	Sets the SW1C output voltage during normal operation mode. See Table 40 for all possible configurations.
UNUSED	7:6	–	0x00	unused

Table 48. Register SW1CSTBY - ADDR 0x2F

Name	Bit #	R/W	Default	Description
SW1CSTBY	5:0	R/W	0x00	Sets the SW1C output voltage during standby mode. See Table 40 for all possible configurations.
UNUSED	7:6	–	0x00	unused

Table 49. Register SW1COFF - ADDR 0x30

Name	Bit #	R/W	Default	Description
SW1COFF	5:0	R/W	0x00	Sets the SW1C output voltage during sleep mode. See Table 40 for all possible configurations.
UNUSED	7:6	–	0x00	unused

Table 50. Register SW1CMODE - ADDR 0x31

Name	Bit #	R/W	Default	Description
SW1CMODE	3:0	R/W	0x80	Sets the SW1C switching operation mode. See Table 29 for all possible configurations.
UNUSED	4	–	0x00	unused
SW1COMODE	5	R/W	0x00	Set status of SW1C when in sleep mode 0 = OFF 1 = PFM
UNUSED	7:6	–	0x00	unused

Table 51. Register SW1CCONF - ADDR 0x32

Name	Bit #	R/W	Default	Description
SW1CILIM	0	R/W	0x00	SW1C current limit level selection 0 = High level current limit 1 = Low level current limit
UNUSED	1	R/W	0x00	Unused
SW1CFREQ	3:2	R/W	0x00	SW1C switching frequency selector. See Table 37.
SW1CPHASE	5:4	R/W	0x00	SW1C phase clock selection. See Table 35.
SW1CDVSSPEED	7:6	R/W	0x00	SW1C DVS speed selection. See Table 33.

6.4.4.3.5 SW1A/B/C external components

Table 52. SW1A/B/C external component recommendations

Components	Description	Mode		
		A/B/C single phase	A/B single - C independent mode	A/B dual - C independent mode
C_{INSW1A}[41]	SW1A input capacitor	4.7 µF	4.7 µF	4.7 µF
C_{IN1AHF}[41]	SW1A decoupling input capacitor	0.1 µF	0.1 µF	0.1 µF
C_{INSW1B}[41]	SW1B input capacitor	4.7 µF	4.7 µF	4.7 µF
C_{IN1BHF}[41]	SW1B decoupling input capacitor	0.1 µF	0.1 µF	0.1 µF
C_{INSW1C}[41]	SW1C input capacitor	4.7 µF	4.7 µF	4.7 µF
C_{IN1CHF}[41]	SW1C decoupling input capacitor	0.1 µF	0.1 µF	0.1 µF
C_{OSW1AB}[41]	SW1A/B output capacitor	6 x 22 µF	4 x 22 µF	4 x 22 µF
C_{OSW1C}[41]	SW1C output capacitor	–	2 x 22 µF	2 x 22 µF
L_{SW1A}	SW1A inductor	1.0 µH DCR = 12 mΩ I_{SAT} = 6.0 A	1.0 µH DCR = 12 mΩ I_{SAT} = 4.5 A	1.0 µH DCR = 60 mΩ I_{SAT} = 2.4 A
L_{SW1B}	SW1B inductor	–	–	1.0 µH DCR = 60 mΩ I_{SAT} = 2.4 A
L_{SW1C}	SW1C inductor	–	1.0 µH DCR = 60 mΩ I_{SAT} = 2.4 A	1.0 µH DCR = 60 mΩ I_{SAT} = 2.4 A

Notes
41. Use X5R or X7R capacitors.

6.4.4.3.6 SW1A/B/C specifications

Table 53. SW1A/B/C electrical characteristics

All parameters are specified at PF0100Z T_A = -40 °C to 85 °C, PF0100AZ T_A = -40 °C to 105 °C, V_{IN} = VIN_{SW1x} = 3.6 V, V_{SW1x} = 1.2 V, I_{SW1x} = 100 mA, SW1x_PWRSTG[2:0] = [111], typical external component values, f_{SW1x} = 2.0 MHz, unless otherwise noted. Typical values are characterized at V_{IN} = VIN_{SW1x} = 3.6 V, V_{SW1x} = 1.2 V, I_{SW1x} = 100 mA, SW1x_PWRSTG[2:0] = [111], and 25 °C, unless otherwise noted.

Symbol	Parameter	Min.	Typ.	Max.	Unit	Notes
SW1A/B/C (single phase)						
VIN_{SW1A} VIN_{SW1B} VIN_{SW1C}	Operating input voltage	2.8	–	4.5	V	
V_{SW1ABC}	Nominal output voltage	–	Table 40	–	V	
$V_{SW1ABCACC}$	Output voltage accuracy • PWM, APS, 2.8 V < V_{IN} < 4.5 V, 0 < I_{SW1ABC} < 4.5 A 0.625 V ≤ V_{SW1ABC} ≤ 1.450 V 1.475 V ≤ V_{SW1ABC} ≤ 1.875 V • PFM, steady state, 2.8 V < V_{IN} < 4.5 V, 0 < I_{SW1ABC} < 150 mA 0.625 V < V_{SW1ABC} < 0.675 V 0.7 V < V_{SW1ABC} < 0.85 V 0.875 V < V_{SW1ABC} < 1.875 V	 -25 -3.0% -65 -45 -3.0%	 – – – – –	 25 3.0% 65 45 3.0%	mV %	
I_{SW1ABC}	Rated output load current, 2.8 V < V_{IN} < 4.5 V, 0.625 V < V_{SW1ABC} < 1.875 V	–	–	4500	mA	
$I_{SW1ABCLIM}$	Current limiter peak current detection • Current through inductor SW1ABILIM = 0 SW1ABILIM = 1	 7.1 5.3	 10.5 7.9	 13.7 10.3	A	
$V_{SW1ABCOSH}$	Start-up overshoot I_{SW1ABC} = 0 mA DVS clk = 25 mV/4 µs, V_{IN} = VIN_{SW1x} = 4.5 V, V_{SW1ABC} = 1.875 V	–	–	66	mV	
tON_{SW1ABC}	Turn-on time Enable to 90% of end value I_{SW1x} = 0 mA DVS clk = 25 mV/4.0 µs, V_{IN} = VIN_{SW1x} = 4.5 V, V_{SW1ABC} = 1.875 V	–	–	500	µs	
f_{SW1ABC}	Switching frequency SW1xFREQ[1:0] = 00 SW1xFREQ[1:0] = 01 SW1xFREQ[1:0] = 10	 – – –	 1.0 2.0 4.0	 – – –	MHz	
η_{SW1ABC}	Efficiency • V_{IN} = 3.6 V, f_{SW1ABC} = 2.0 MHz, L_{SW1ABC} = 1.0 µH PFM, 0.9 V, 1.0 mA PFM, 1.2 V, 50 mA APS, PWM, 1.2 V, 850 mA APS, PWM, 1.2 V, 1275 mA APS, PWM, 1.2 V, 2125 mA APS, PWM, 1.2 V, 4500 mA	 – – – – – –	 77 82 86 84 80 70	 – – – – – –	%	
ΔV_{SW1ABC}	Output ripple	–	10	–	mV	
$V_{SW1ABCLIR}$	Line regulation (APS, PWM)	–	–	20	mV	
$V_{SW1ABCLOR}$	DC load regulation (APS, PWM)	–	–	20	mV	
$V_{SW1ABCLOTR}$	Transient load regulation • Transient load = 0 A to 2.25 A, di/dt = 100 mA/µs Overshoot Undershoot	 – –	 – –	 50 50	mV	

Table 53. SW1A/B/C electrical characteristics (continued)

All parameters are specified at PF0100Z T_A = -40 °C to 85 °C, PF0100AZ T_A = -40 °C to 105 °C, V_{IN} = VIN_{SW1x} = 3.6 V, V_{SW1x} = 1.2 V, I_{SW1x} = 100 mA, SW1x_PWRSTG[2:0] = [111], typical external component values, f_{SW1x} = 2.0 MHz, unless otherwise noted. Typical values are characterized at V_{IN} = VIN_{SW1x} = 3.6 V, V_{SW1x} = 1.2 V, I_{SW1x} = 100 mA, SW1x_PWRSTG[2:0] = [111], and 25 °C, unless otherwise noted.

Symbol	Parameter	Min.	Typ.	Max.	Unit	Notes
SW1A/B/C (single phase) (continued)						
$I_{SW1ABCQ}$	Quiescent current PFM mode APS mode	 – –	 18 145	 – –	µA	
$R_{SW1ABCDIS}$	Discharge resistance	–	600	–	W	
SW1A/B (single/dual phasE)						
VIN_{SW1A} VIN_{SW1B}	Operating input voltage	2.8	–	4.5	V	
V_{SW1AB}	Nominal output voltage	–	Table 40	–	V	
$V_{SW1ABACC}$	Output voltage accuracy • PWM, APS, 2.8 V < V_{IN} < 4.5 V, 0 < I_{SW1AB} < 2.5 A 0.625 V ≤ V_{SW1AB} ≤ 1.450 V 1.475 V ≤ V_{SW1AB} ≤ 1.875 V • PFM, steady state, 2.8 V < V_{IN} < 4.5 V, 0 < I_{SW1AB} < 150 mA 0.625 V < V_{SW1AB} < 0.675 V 0.7 V < V_{SW1AB} < 0.85 V 0.875 V < V_{SW1AB} < 1.875 V	 -25 -3.0% -65 -45 -3.0%	 - - – – –	 25 3.0% -65 -45 3.0%	mV %	
I_{SW1AB}	Rated output load current, 2.8 V < V_{IN} < 4.5 V, 0.625 V < V_{SW1AB} < 1.875 V	–	–	2500	mA	(43)
$I_{SW1ABLIM}$	Current limiter peak current detection • SW1A/B single phase (current through inductor) SW1ABILIM = 0 SW1ABILIM = 1 • SW1A/B dual phase (current through inductor per phase) SW1ABILIM = 0 SW1ABILIM = 1	 4.5 3.3 2.2 1.6	 6.5 4.9 3.2 2.4	 8.5 6.4 4.3 3.2	A	(43)
$V_{SW1ABOSH}$	Start-up overshoot I_{SW1AB} = 0.0 mA DVS clk = 25 mV/4 µs, V_{IN} = VIN_{SW1x} = 4.5 V, V_{SW1AB} = 1.875 V	–	–	66	mV	
tON_{SW1AB}	Turn-on time Enable to 90% of end value I_{SW1AB} = 0.0 mA DVS clk = 25 mV/4 µs, V_{IN} = VIN_{SW1x} = 4.5 V, V_{SW1AB} = 1.875 V	–	–	500	µs	
f_{SW1AB}	Switching frequency SW1ABFREQ[1:0] = 00 SW1ABFREQ[1:0] = 01 SW1ABFREQ[1:0] = 10	 – – –	 1.0 2.0 4.0	 – – –	MHz	
η_{SW1AB}	Efficiency (single phase) • V_{IN} = 3.6 V, f_{SW1AB} = 2.0 MHz, L_{SW1AB} = 1.0 µH PFM, 0.9 V, 1.0 mA PFM, 1.2 V, 50 mA APS, PWM, 1.2 V, 500 mA APS, PWM, 1.2 V, 750 mA APS, PWM, 1.2 V, 1250 mA APS, PWM, 1.2 V, 2500 mA	 – – – – – –	 82 84 86 87 83 75	 – – – – – –	%	
ΔV_{SW1AB}	Output ripple	–	10	–	mV	
$V_{SW1ABLIR}$	Line regulation (APS, PWM)	–	–	20	mV	

Table 53. SW1A/B/C electrical characteristics (continued)

All parameters are specified at PF0100Z T_A = -40 °C to 85 °C, PF0100AZ T_A = -40 °C to 105 °C, V_{IN} = VIN_{SW1x} = 3.6 V, V_{SW1x} = 1.2 V, I_{SW1x} = 100 mA, SW1x_PWRSTG[2:0] = [111], typical external component values, f_{SW1x} = 2.0 MHz, unless otherwise noted. Typical values are characterized at V_{IN} = VIN_{SW1x} = 3.6 V, V_{SW1x} = 1.2 V, I_{SW1x} = 100 mA, SW1x_PWRSTG[2:0] = [111], and 25 °C, unless otherwise noted.

Symbol	Parameter	Min.	Typ.	Max.	Unit	Notes
SW1A/B (single/dual phase) (continued)						
$V_{SW1ABLOR}$	DC load regulation (APS, PWM)	–	–	20	mV	
$V_{SW1ABLOTR}$	Transient load regulation • Transient load = 0 A to 1.25 A, di/dt = 100 mA/µs Overshoot Undershoot	 – –	 – –	 50 50	mV	
I_{SW1ABQ}	Quiescent current PFM mode APS mode	 – –	 18 235	 – –	µA	
$R_{ONSW1AP}$	SW1A P-MOSFET $R_{DS(on)}$ VIN_{SW1A} = 3.3 V	–	215	245	mΩ	
$R_{ONSW1AN}$	SW1A N-MOSFET $R_{DS(on)}$ VIN_{SW1A} = 3.3 V	–	258	326	mΩ	
I_{SW1APQ}	SW1A P-MOSFET leakage current VIN_{SW1A} = 4.5 V	–	–	7.5	µA	
I_{SW1ANQ}	SW1A N-MOSFET leakage current VIN_{SW1A} = 4.5 V	–	–	2.5	µA	
$R_{ONSW1BP}$	SW1B P-MOSFET $R_{DS(on)}$ VIN_{SW1B} = 3.3 V	–	215	245	mΩ	
$R_{ONSW1BN}$	SW1B N-MOSFET $R_{DS(on)}$ VIN_{SW1B} = 3.3 V	–	258	326	mΩ	
I_{SW1BPQ}	SW1B P-MOSFET leakage current VIN_{SW1B} = 4.5 V	–	–	7.5	µA	
I_{SW1BNQ}	SW1B N-MOSFET leakage current VIN_{SW1B} = 4.5 V	–	–	2.5	µA	
$R_{SW1ABDIS}$	Discharge Resistance	–	600	–	W	
SW1C (independent)						
VIN_{SW1C}	Operating input voltage	2.8	–	4.5	V	
V_{SW1C}	Nominal output voltage	–	Table 40	–	V	
$V_{SW1CACC}$	Output voltage accuracy • PWM, APS, 2.8 V < V_{IN} < 4.5 V, 0 < I_{SW1C} < 2.0 A 0.625 V ≤ V_{SW1C} ≤ 1.450 V 1.475 V ≤ V_{SW1C} ≤ 1.875 V • PFM, steady state 2.8 V < V_{IN} < 4.5 V, 0 < I_{SW1C} < 50 mA 0.625 V < V_{SW1C} < 0.675 V 0.7 V < V_{SW1C} < 0.85 V 0.875 V < V_{SW1C} < 1.875 V	 -25 -3.0% -65 -45 -3.0%	 – – – – –	 25 3.0% 65 45 3.0%	mV	
I_{SW1C}	Rated output load current 2.8 V < V_{IN} < 4.5 V, 0.625 V < V_{SW1C} < 1.875 V	–	–	2000	mA	
$I_{SW1CLIM}$	Current limiter peak current detection • Current through inductor SW1CILIM = 0 SW1CILIM = 1	 2.6[42] 1.95	 4.0 3.0	 5.2 3.9	A	

Table 53. SW1A/B/C electrical characteristics (continued)

All parameters are specified at PF0100Z T_A = -40 °C to 85 °C, PF0100AZ T_A = -40 °C to 105 °C, V_{IN} = VIN_{SW1x} = 3.6 V, V_{SW1x} = 1.2 V, I_{SW1x} = 100 mA, SW1x_PWRSTG[2:0] = [111], typical external component values, f_{SW1x} = 2.0 MHz, unless otherwise noted. Typical values are characterized at V_{IN} = VIN_{SW1x} = 3.6 V, V_{SW1x} = 1.2 V, I_{SW1x} = 100 mA, SW1x_PWRSTG[2:0] = [111], and 25 °C, unless otherwise noted.

Symbol	Parameter	Min.	Typ.	Max.	Unit	Notes
SW1C (independent) (continued)						
$V_{SW1COSH}$	Start-up overshoot I_{SW1C} = 0 mA DVS clk = 25 mV/4 µs, V_{IN} = VIN_{SW1C} = 4.5 V, V_{SW1C} = 1.875 V	–	–	66	mV	
tON_{SW1C}	Turn-on time Enable to 90% of end value I_{SW1C} = 0 mA DVS clk = 25 mV/4 µs, V_{IN} = VIN_{SW1C} = 4.5 V, V_{SW1C} = 1.875 V	–	–	500	µs	
f_{SW1C}	Switching frequency SW1CFREQ[1:0] = 00 SW1CFREQ[1:0] = 01 SW1CFREQ[1:0] = 10	 – – –	 1.0 2.0 4.0	 – – –	MHz	
η_{SW1C}	Efficiency • V_{IN} = 3.6 V, f_{SW1C} = 2.0 MHz, L_{SW1C} = 1.0 µH PFM, 0.9 V, 1.0 mA PFM, 1.2 V, 50 mA APS, PWM, 1.2 V, 400 mA APS, PWM, 1.2 V, 600 mA APS, PWM, 1.2 V, 1000 mA APS, PWM, 1.2 V, 2000 mA	 – – – – – –	 77 78 86 84 78 68	 – – – – – –	%	
ΔV_{SW1C}	Output ripple	–	10	–	mV	
$V_{SW1CLIR}$	Line regulation (APS, PWM)	–	–	20	mV	
$V_{SW1CLOR}$	DC load regulation (APS, PWM)	–	–	20	mV	
$V_{SW1CLOTR}$	Transient load regulation • Transient load = 0.0 mA to 1.0 A, di/dt = 100 mA/µs Overshoot Undershoot	 – –	 – –	 50 50	mV	
I_{SW1CQ}	Quiescent current PFM mode APS mode	 – –	 22 145	 – –	µA	
$R_{ONSW1CP}$	SW1C P-MOSFET $R_{DS(on)}$ at VIN_{SW1C} = 3.3 V	–	184	206	mΩ	
$R_{ONSW1CN}$	SW1C N-MOSFET $R_{DS(on)}$ at VIN_{SW1C} = 3.3 V	–	211	260	mΩ	
I_{SW1CPQ}	SW1C P-MOSFET leakage current VIN_{SW1C} = 4.5 V	–	–	10.5	µA	
I_{SW1CNQ}	SW1C N-MOSFET leakage current VIN_{SW1C} = 4.5 V	–	–	3.5	µA	
$R_{SW1CDIS}$	Discharge resistance	–	600	–	W	

Notes

42. Supports the Coremark and 3D MM benchmark maximum current value of 2500 mA of the VDD_SOC_IN domain in the i.MX 6Dual/Quad processors.
43. Current rating of SW1AB supports the power virus mode of operation of the i.MX 6X processor.

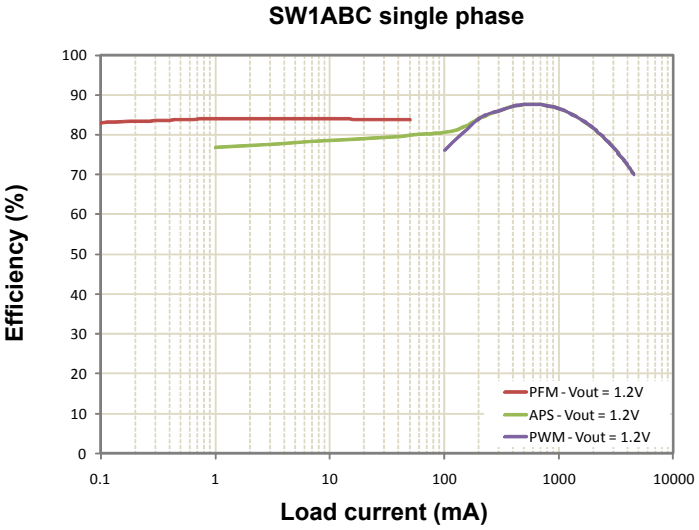

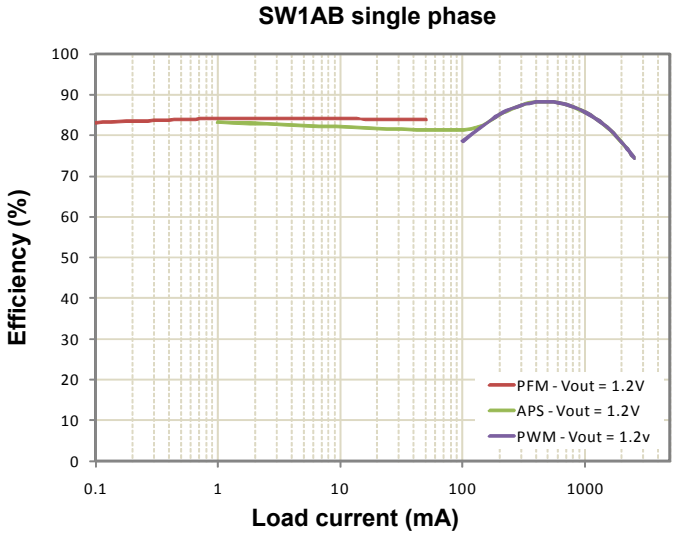

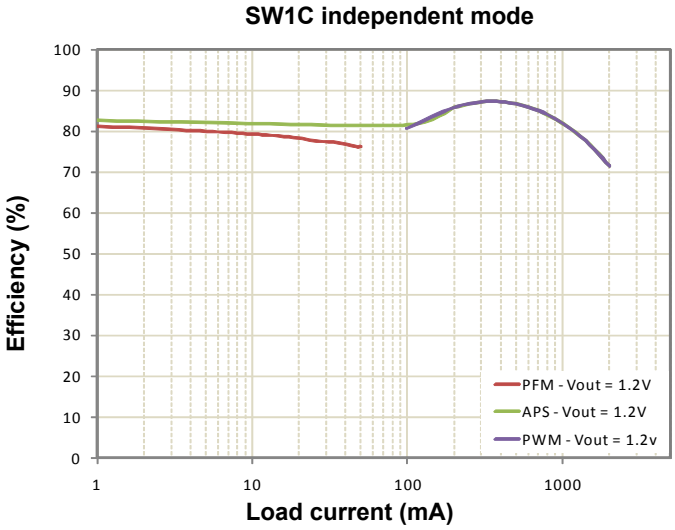

Figure 14. SW1AB and SW1C efficiency waveforms

6.4.4.4 SW2

SW2 is a single phase, 2.0 A rated buck regulator (2.5 A in NP/F9/FA versions). Table 29 describes the modes, and Table 30 show the options for the SWxMODE[3:0] bits. Figure 15 shows the block diagram and the external component connections for SW2 regulator.

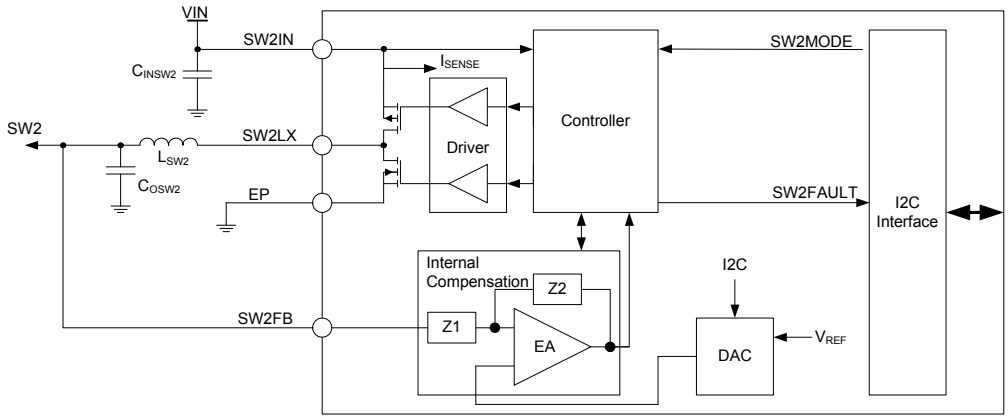

Figure 15. SW2 block diagram

6.4.4.4.1 SW2 setup and control registers

SW2 output voltage is programmable from 0.400 V to 3.300 V; however, bit SW2[6] in register SW2VOLT is read-only during normal operation. Its value is determined by the default configuration, or may be changed by using the OTP registers. Therefore, once SW2[6] is set to “0”, the output is limited to the lower output voltages from 0.400 V to 1.975 V with 25 mV increments, as determined by bits SW2[5:0]. Likewise, once bit SW2[6] is set to “1”, the output voltage is limited to the higher output voltage range from 0.800 V to 3.300 V with 50 mV increments, as determined by bits SW2[5:0].

To optimize the performance of the regulator, it is recommended that only voltages from 2.000 V to 3.300 V be used in the high range, and the lower range be used for voltages from 0.400 V to 1.975 V.

The output voltage set point is independently programmed for normal, standby, and sleep mode by setting the SW2[5:0], SW2STBY[5:0] and SW2OFF[5:0] bits, respectively. However, the initial state of bit SW2[6] is copied into bits SW2STBY[6], and SW2OFF[6] bits. Therefore, the output voltage range remains the same in all three operating modes. Table 54 shows the output voltage coding valid for SW2.

Note: Voltage set points of 0.6 V and below are not supported.

Table 54. SW2 output voltage configuration

Low output voltage range[44]			High output voltage range		
Set Point	**SW2[6:0]**	**SW2 Output**	**Set Point**	**SW2[6:0]**	**SW2 Output**
0	0000000	0.4000	64	1000000	0.8000
1	0000001	0.4250	65	1000001	0.8500
2	0000010	0.4500	66	1000010	0.9000
3	0000011	0.4750	67	1000011	0.9500
4	0000100	0.5000	68	1000100	1.0000
5	0000101	0.5250	69	1000101	1.0500
6	0000110	0.5500	70	1000110	1.1000
7	0000111	0.5750	71	1000111	1.1500
8	0001000	0.6000	72	1001000	1.2000
9	0001001	0.6250	73	1001001	1.2500
10	0001010	0.6500	74	1001010	1.3000
11	0001011	0.6750	75	1001011	1.3500
12	0001100	0.7000	76	1001100	1.4000

Table 54. SW2 output voltage configuration (continued)

Low output voltage range[44]			High output voltage range		
Set Point	**SW2[6:0]**	**SW2 Output**	**Set Point**	**SW2[6:0]**	**SW2 Output**
13	0001101	0.7250	77	1001101	1.4500
14	0001110	0.7500	78	1001110	1.5000
15	0001111	0.7750	79	1001111	1.5500
16	0010000	0.8000	80	1010000	1.6000
17	0010001	0.8250	81	1010001	1.6500
18	0010010	0.8500	82	1010010	1.7000
19	0010011	0.8750	83	1010011	1.7500
20	0010100	0.9000	84	1010100	1.8000
21	0010101	0.9250	85	1010101	1.8500
22	0010110	0.9500	86	1010110	1.9000
23	0010111	0.9750	87	1010111	1.9500
24	0011000	1.0000	88	1011000	2.0000
25	0011001	1.0250	89	1011001	2.0500
26	0011010	1.0500	90	1011010	2.1000
27	0011011	1.0750	91	1011011	2.1500
28	0011100	1.1000	92	1011100	2.2000
29	0011101	1.1250	93	1011101	2.2500
30	0011110	1.1500	94	1011110	2.3000
31	0011111	1.1750	95	1011111	2.3500
32	0100000	1.2000	96	1100000	2.4000
33	0100001	1.2250	97	1100001	2.4500
34	0100010	1.2500	98	1100010	2.5000
35	0100011	1.2750	99	1100011	2.5500
36	0100100	1.3000	100	1100100	2.6000
37	0100101	1.3250	101	1100101	2.6500
38	0100110	1.3500	102	1100110	2.7000
39	0100111	1.3750	103	1100111	2.7500
40	0101000	1.4000	104	1101000	2.8000
41	0101001	1.4250	105	1101001	2.8500
42	0101010	1.4500	106	1101010	2.9000
43	0101011	1.4750	107	1101011	2.9500
44	0101100	1.5000	108	1101100	3.0000
45	0101101	1.5250	109	1101101	3.0500
46	0101110	1.5500	110	1101110	3.1000
47	0101111	1.5750	111	1101111	3.1500
48	0110000	1.6000	112	1110000	3.2000
49	0110001	1.6250	113	1110001	3.2500
50	0110010	1.6500	114	1110010	3.3000
51	0110011	1.6750	115	1110011	Reserved
52	0110100	1.7000	116	1110100	Reserved
53	0110101	1.7250	117	1110101	Reserved

Table 54. SW2 output voltage configuration (continued)

Low output voltage range[44]			High output voltage range		
Set Point	SW2[6:0]	SW2 Output	Set Point	SW2[6:0]	SW2 Output
54	0110110	1.7500	118	1110110	Reserved
55	0110111	1.7750	119	1110111	Reserved
56	0111000	1.8000	120	1111000	Reserved
57	0111001	1.8250	121	1111001	Reserved
58	0111010	1.8500	122	1111010	Reserved
59	0111011	1.8750	123	1111011	Reserved
60	0111100	1.9000	124	1111100	Reserved
61	0111101	1.9250	125	1111101	Reserved
62	0111110	1.9500	126	1111110	Reserved
63	0111111	1.9750	127	1111111	Reserved

Notes
44. For voltages less than 2.0 V, only use set points 0 to 63.

Setup and control of SW2 is done through I^2C registers listed in Table 55, and a detailed description of each one of the registers is provided in Tables 56 to Table 60.

Table 55. SW2 register summary

Register	Address	Description
SW2VOLT	0x35	Output voltage set point on normal operation
SW2STBY	0x36	Output voltage set point on standby
SW2OFF	0x37	Output voltage set point on sleep
SW2MODE	0x38	Switching mode selector register
SW2CONF	0x39	DVS, phase, frequency, and ILIM configuration

Table 56. Register SW2VOLT - ADDR 0x35

Name	Bit #	R/W	Default	Description
SW2	5:0	R/W	0x00	Sets the SW2 output voltage during normal operation mode. See Table 54 for all possible configurations.
SW2	6	R	0x00	Sets the operating output voltage range for SW2. Set during OTP or TBB configuration only. See Table 54 for all possible configurations.
UNUSED	7	–	0x00	unused

Table 57. Register SW2STBY - ADDR 0x36

Name	Bit #	R/W	Default	Description
SW2STBY	5:0	R/W	0x00	Sets the SW2 output voltage during standby mode. See Table 54 for all possible configurations.
SW2STBY	6	R	0x00	Sets the operating output voltage range for SW2 on standby mode. This bit inherits the value configured on bit SW2[6] during OTP or TBB configuration. See Table 54 for all possible configurations.
UNUSED	7	–	0x00	unused

Table 58. Register SW2OFF - ADDR 0x37

Name	Bit #	R/W	Default	Description
SW2OFF	5:0	R/W	0x00	Sets the SW2 output voltage during sleep mode. See Table 54 for all possible configurations.
SW2OFF	6	R	0x00	Sets the operating output voltage range for SW2 on sleep mode. This bit inherits the value configured on bit SW2[6] during OTP or TBB configuration. See Table 54 for all possible configurations.
UNUSED	7	–	0x00	unused

Table 59. Register SW2MODE - ADDR 0x38

Name	Bit #	R/W	Default	Description
SW2MODE	3:0	R/W	0x80	Sets the SW2 switching operation mode. See Table 29 for all possible configurations.
UNUSED	4	–	0x00	unused
SW2OMODE	5	R/W	0x00	Set status of SW2 when in sleep mode 0 = OFF 1 = PFM
UNUSED	7:6	–	0x00	unused

Table 60. Register SW2CONF - ADDR 0x39

Name	Bit #	R/W	Default	Description
SW2ILIM	0	R/W	0x00	SW2 current limit level selection [45] 0 = High level current limit 1 = Low level current limit
UNUSED	1	R/W	0x00	unused
SW2FREQ	3:2	R/W	0x00	SW2 switching frequency selector. See Table 37.
SW2PHASE	5:4	R/W	0x00	SW2 phase clock selection. See Table 35.
SW2DVSSPEED	7:6	R/W	0x00	SW2 DVS speed selection. See Table 34.

Notes

45. SW2ILIM = 0 must be used in NP/F9/FA versions if 2.5 A output load current is desired

6.4.4.4.2 SW2 external components

Table 61. SW2 external component recommendations

Components	Description	Values
C_{INSW2} [46]	SW2 input capacitor	4.7 µF
C_{IN2HF} [46]	SW2 decoupling input capacitor	0.1 µF
C_{OSW2} [46]	SW2 output capacitor	2 x 22 µF
L_{SW2}	SW2 inductor	1.0 µH DCR = 50 mΩ I_{SAT} = 2.65 A

Notes

46. Use X5R or X7R capacitors.

6.4.4.4.3 SW2 specifications

Table 62. SW2 electrical characteristics

All parameters are specified at PF0100Z T_A = -40 °C to 85 °C, PF0100AZ T_A = -40 °C to 105 °C, V_{IN} = VIN_{SW2} = 3.6 V, V_{SW2} = 3.15 V, I_{SW2} = 100 mA, SW2_PWRSTG[2:0] = [111], typical external component values, f_{SW2} = 2.0 MHz, unless otherwise noted. Typical values are characterized at V_{IN} = VIN_{SW2} = 3.6 V, V_{SW2} = 3.15 V, I_{SW2} = 100 mA, SW2_PWRSTG[2:0] = [111], and 25 °C, unless otherwise noted.

Symbol	Parameter	Min.	Typ.	Max.	Unit	Notes
Switch mode supply SW2						
VIN_{SW2}	Operating input voltage	2.8	–	4.5	V	(47)
V_{SW2}	Nominal output voltage	–	Table 54	–	V	
V_{SW2ACC}	Output voltage accuracy • PWM, APS, 2.8 V < V_{IN} < 4.5 V, 0 < I_{SW2} < 2.0 A 0.625 V < V_{SW2} < 0.85 V 0.875 V < V_{SW2} < 1.975 V 2.0 V < V_{SW2} < 3.3 V • PFM, 2.8 V < V_{IN} < 4.5 V, 0 < I_{SW2} ≤ 50 mA 0.625 V < V_{SW2} < 0.675 V 0.7 V < V_{SW2} < 0.85 V 0.875 V < V_{SW2} < 1.975 V 2.0 V < V_{SW2} < 3.3 V	 -25 -3.0% -6.0% -65 -45 -3.0% -3.0%	 – – – – – – –	 25 3.0% 6.0% 65 45 3.0% 3.0%	mV %	
I_{SW2}	Rated output load current • 2.8 V < V_{IN} < 4.5 V, 0.625 V < V_{SW2} < 3.3 V • 2.8 V < V_{IN} < 4.5 V, 1.2 V < V_{SW2} < 3.3 V, SW2LIM = 0	 – –	 – –	 2000 2500	mA	 (48) (49)
I_{SW2LIM}	Current limiter peak current detection • Current through inductor SW2ILIM = 0 SW2ILIM = 1	 2.8 2.1	 4.0 3.0	 5.2 3.9	A	
V_{SW2OSH}	Start-up overshoot I_{SW2} = 0.0 mA DVS clk = 25 mV/4 µs, V_{IN} = VIN_{SW2} = 4.5 V	–	–	66	mV	
tON_{SW2}	Turn-on time Enable to 90% of end value I_{SW2} = 0.0 mA DVS clk = 50 mV/8 µs, V_{IN} = VIN_{SW2} = 4.5 V	–	–	550	µs	
f_{SW2}	Switching frequency SW2FREQ[1:0] = 00 SW2FREQ[1:0] = 01 SW2FREQ[1:0] = 10	 – – –	 1.0 2.0 4.0	 – – –	MHz	
η_{SW2}	Efficiency • V_{IN} = 3.6 V, f_{SW2} = 2.0 MHz, L_{SW2} = 1.0 µH PFM, 3.15 V, 1.0 mA PFM, 3.15 V, 50 mA APS, PWM, 3.15 V, 400 mA APS, PWM, 3.15 V, 600 mA APS, PWM, 3.15 V, 1000 mA APS, PWM, 3.15 V, 2000 mA	 – – – – – –	 94 95 96 94 92 88	 – – – – – –	%	
ΔV_{SW2}	Output ripple	–	10	–	mV	
V_{SW2LIR}	Line regulation (APS, PWM)	–	–	20	mV	
V_{SW2LOR}	DC load regulation (APS, PWM)	–	–	20	mV	
$V_{SW2LOTR}$	Transient load regulation • Transient load = 0.0 mA to 1.0 A, di/dt = 100 mA/µs Overshoot Undershoot	 – –	 – –	 50 50	mV	

Table 62. SW2 electrical characteristics (continued)

All parameters are specified at PF0100Z T_A = -40 °C to 85 °C, PF0100AZ T_A = -40 °C to 105 °C, V_{IN} = VIN_{SW2} = 3.6 V, V_{SW2} = 3.15 V, I_{SW2} = 100 mA, SW2_PWRSTG[2:0] = [111], typical external component values, f_{SW2} = 2.0 MHz, unless otherwise noted. Typical values are characterized at V_{IN} = VIN_{SW2} = 3.6 V, V_{SW2} = 3.15 V, I_{SW2} = 100 mA, SW2_PWRSTG[2:0] = [111], and 25 °C, unless otherwise noted.

Symbol	Parameter	Min.	Typ.	Max.	Unit	Notes
Switch mode supply SW2 (continued)						
I_{SW2Q}	Quiescent current PFM mode APS mode (low output voltage settings) APS mode (high output voltage settings)	 – – –	 23 145 305	 – – –	µA	
R_{ONSW2P}	SW2 P-MOSFET $R_{DS(on)}$ at V_{IN} = VIN_{SW2} = 3.3 V	–	190	209	mΩ	
R_{ONSW2N}	SW2 N-MOSFET $R_{DS(on)}$ at V_{IN} = VIN_{SW2} = 3.3 V	–	212	255	mΩ	
I_{SW2PQ}	SW2 P-MOSFET leakage current V_{IN} = VIN_{SW2} = 4.5 V	–	–	12	µA	
I_{SW2NQ}	SW2 N-MOSFET leakage current V_{IN} = VIN_{SW2} = 4.5 V	–	–	4.0	µA	
R_{SW2DIS}	Discharge resistance	–	600	–	W	

Notes

47. When output is set to > 2.6 V the output will follow the input down when V_{IN} gets near 2.8 V.
48. The higher output voltages available depend on the voltage drop in the conduction path as given by the following equation: (VIN_{SW2} - V_{SW2}) = I_{SW2}* (DCR of Inductor +R_{ONSW2P} + PCB trace resistance).
49. Applies to NP/F9/FA versions

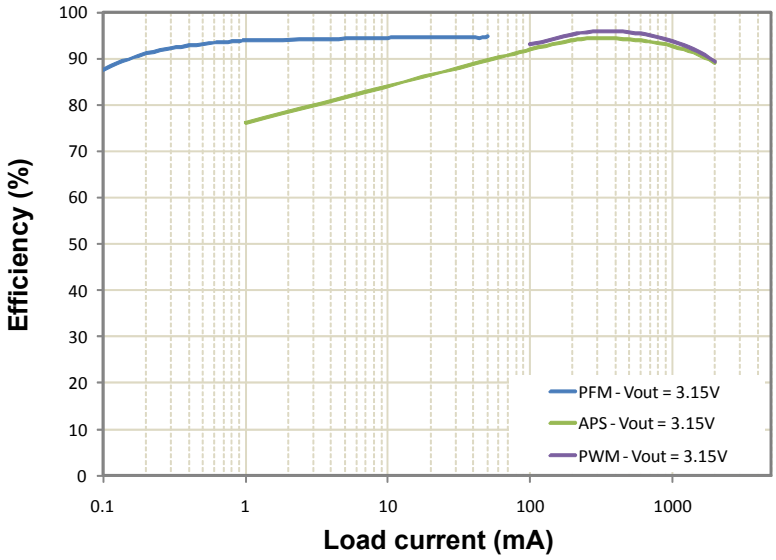

Figure 16. SW2 efficiency waveforms

6.4.4.5 SW3A/B

SW3A/B are 1.25 A to 2.5 A rated buck regulators, depending on the configuration. Table 29 describes the available switching modes and Table 30 show the actual configuration options for the SW3xMODE[3:0] bits.

SW3A/B can be configured in various phasing schemes, depending on the desired cost/performance trade-offs. The following configurations are available:

- A single phase
- A dual phase
- Independent regulators

The desired configuration is programmed in OTP by using the SW3_CONFIG[1:0] bits.Table 63 shows the options for the SW3CFG[1:0] bits.

Table 63. SW3 configuration

SW3_CONFIG[1:0]	Description
00	A/B single phase
01	A/B single phase
10	A/B dual phase
11	A/B independent

6.4.4.5.1 SW3A/B single phase

In this configuration, SW3ALX and SW3BLX are connected in single phase with a single inductor a shown in Figure 17. This configuration reduces cost and component count. Feedback is taken from the SW3AFB pin and the SW3BFB pin must be left open. Although control is from SW3A, registers of both regulators, SW3A and SW3B, must be identically set.

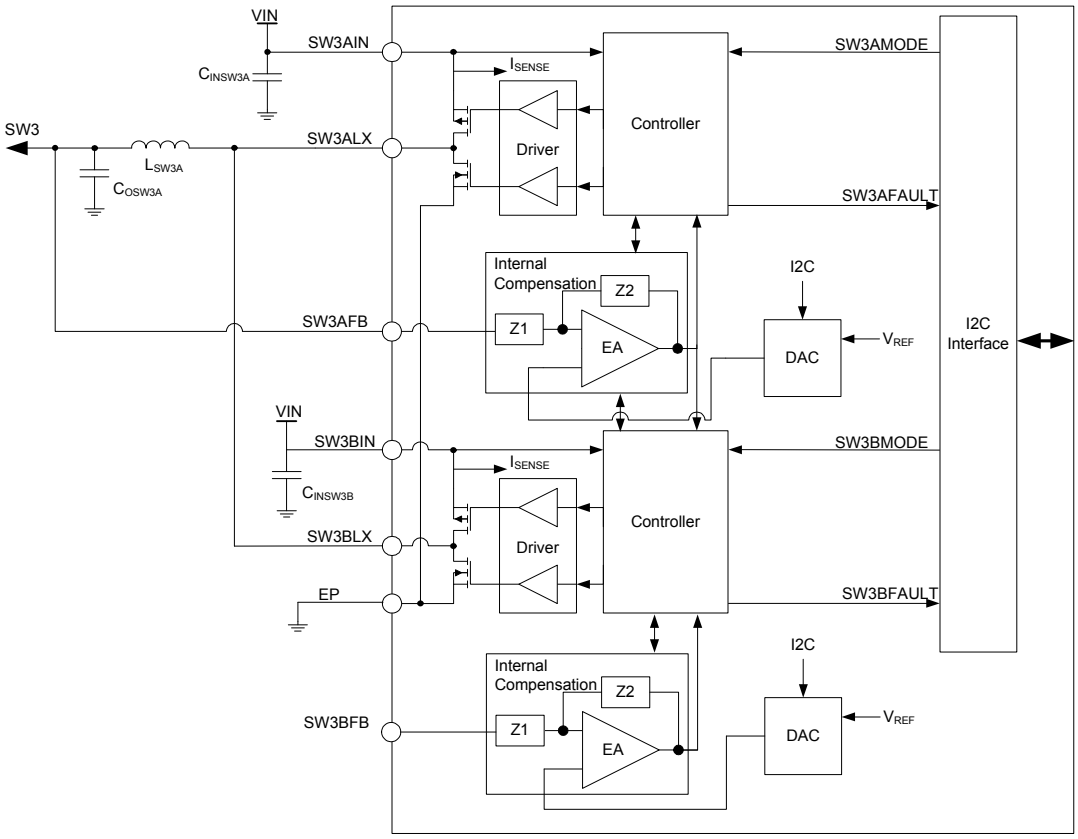

Figure 17. SW3A/B single phase block diagram

6.4.4.5.2 SW3A/B dual phase

SW3A/B can be connected in dual phase configuration using one inductor per switching node, as shown in Figure 18. This mode allows a smaller output voltage ripple. Feedback is taken from pin SW3AFB and pin SW3BFB must be left open. Although control is from SW3A, registers of both regulators, SW3A and SW3B, must be identically set. In this configuration, the regulators switch 180 degrees apart.

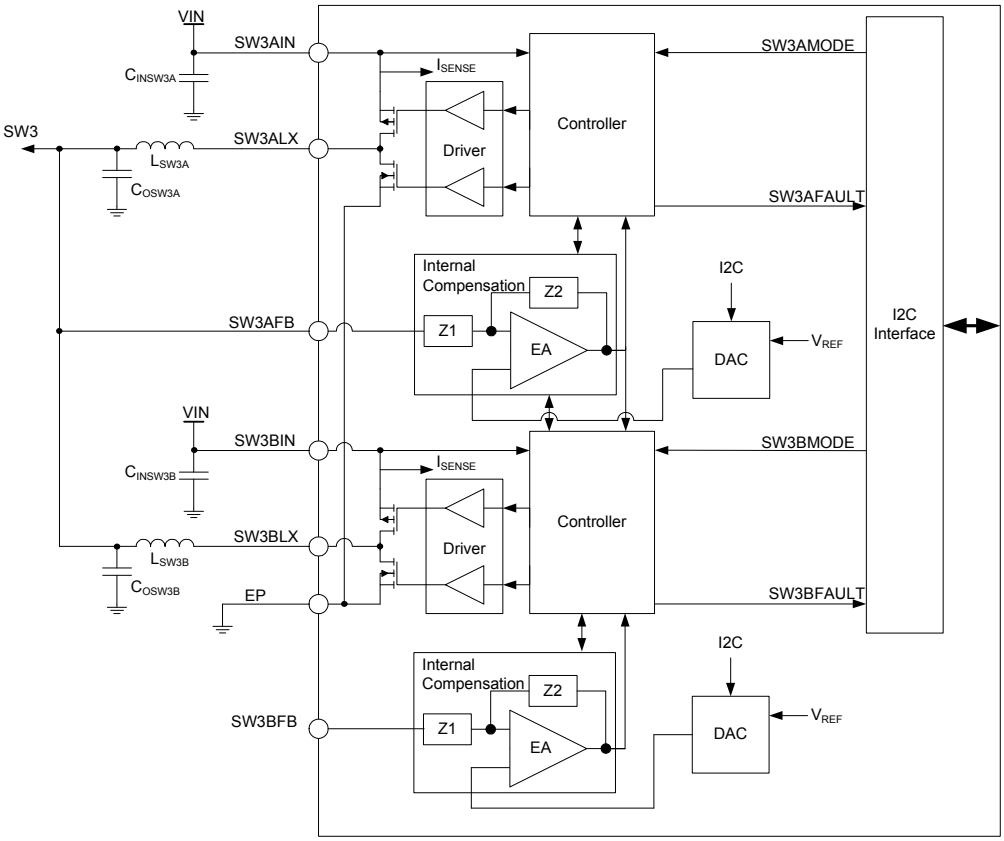

Figure 18. SW3A/B dual phase block diagram

6.4.4.5.3 SW3A - SW3B independent outputs

SW3A and SW3B can be configured as independent outputs as shown in Figure 19, providing flexibility for applications requiring more voltage rails with less current capability. Each output is configured and controlled independently by its respective I^2C registers as shown in Table 65.

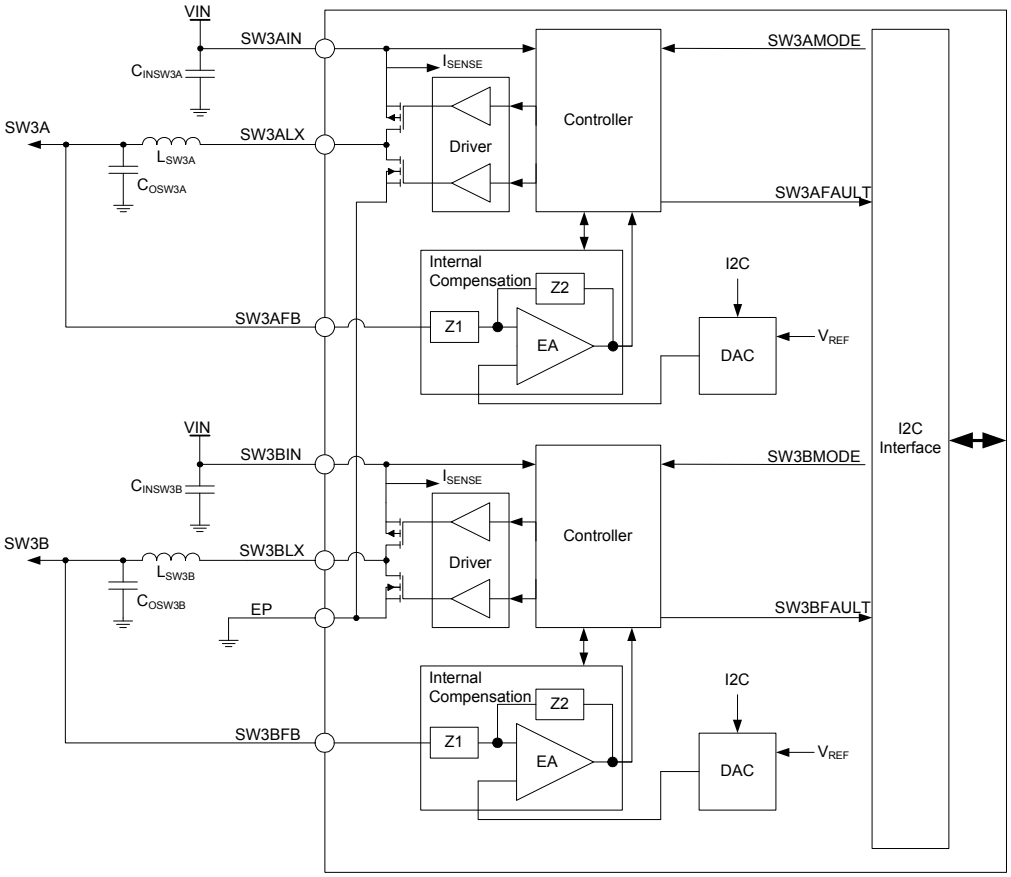

Figure 19. SW3A/B independent output block diagram

6.4.4.5.4 SW3A/B setup and control registers

SW3A/B output voltage is programmable from 0.400 V to 3.300 V; however, bit SW3x[6] in register SW3xVOLT is read-only during normal operation. Its value is determined by the default configuration, or may be changed by using the OTP registers. Therefore, once SW3x[6] is set to “0”, the output is limited to the lower output voltages from 0.40 V to 1.975 V with 25 mV increments, as determined by bits SW3x[5:0]. Likewise, once bit SW3x[6] is set to "1", the output voltage is limited to the higher output voltage range from 0.800 V to 3.300 V with 50 mV increments, as determined by bits SW3x[5:0].

In order to optimize the performance of the regulator, it is recommended that only voltages from 2.00 to 3.300 V be used in the high range and the lower range be used for voltages from 0.400 V to 1.975 V.

The output voltage set point is independently programmed for normal, standby, and sleep mode by setting the SW3x[5:0], SW3xSTBY[5:0], and SW3xOFF[5:0] bits respectively; however, the initial state of the SW3x[6] bit is copied into the SW3xSTBY[6] and SW3xOFF[6] bits. Therefore, the output voltage range remains the same on all three operating modes. Table 64 shows the output voltage coding valid for SW3x.

Note: Voltage set points of 0.6 V and below are not supported.

Table 64. SW3A/B output voltage configuration

Low output voltage range[50]			High output voltage range		
Set point	**SW3x[6:0]**	**SW3x output**	**Set point**	**SW3x[6:0]**	**sw3x output**
0	0000000	0.4000	64	1000000	0.8000
1	0000001	0.4250	65	1000001	0.8500
2	0000010	0.4500	66	1000010	0.9000
3	0000011	0.4750	67	1000011	0.9500
4	0000100	0.5000	68	1000100	1.0000

Table 64. SW3A/B output voltage configuration (continued)

Low output voltage range[50]			High output voltage range		
Set point	**SW3x[6:0]**	**SW3x output**	**Set point**	**SW3x[6:0]**	**sw3x output**
5	0000101	0.5250	69	1000101	1.0500
6	0000110	0.5500	70	1000110	1.1000
7	0000111	0.5750	71	1000111	1.1500
8	0001000	0.6000	72	1001000	1.2000
9	0001001	0.6250	73	1001001	1.2500
10	0001010	0.6500	74	1001010	1.3000
11	0001011	0.6750	75	1001011	1.3500
12	0001100	0.7000	76	1001100	1.4000
13	0001101	0.7250	77	1001101	1.4500
14	0001110	0.7500	78	1001110	1.5000
15	0001111	0.7750	79	1001111	1.5500
16	0010000	0.8000	80	1010000	1.6000
17	0010001	0.8250	81	1010001	1.6500
18	0010010	0.8500	82	1010010	1.7000
19	0010011	0.8750	83	1010011	1.7500
20	0010100	0.9000	84	1010100	1.8000
21	0010101	0.9250	85	1010101	1.8500
22	0010110	0.9500	86	1010110	1.9000
23	0010111	0.9750	87	1010111	1.9500
24	0011000	1.0000	88	1011000	2.0000
25	0011001	1.0250	89	1011001	2.0500
26	0011010	1.0500	90	1011010	2.1000
27	0011011	1.0750	91	1011011	2.1500
28	0011100	1.1000	92	1011100	2.2000
29	0011101	1.1250	93	1011101	2.2500
30	0011110	1.1500	94	1011110	2.3000
31	0011111	1.1750	95	1011111	2.3500
32	0100000	1.2000	96	1100000	2.4000
33	0100001	1.2250	97	1100001	2.4500
34	0100010	1.2500	98	1100010	2.5000
35	0100011	1.2750	99	1100011	2.5500
36	0100100	1.3000	100	1100100	2.6000
37	0100101	1.3250	101	1100101	2.6500
38	0100110	1.3500	102	1100110	2.7000
39	0100111	1.3750	103	1100111	2.7500
40	0101000	1.4000	104	1101000	2.8000
41	0101001	1.4250	105	1101001	2.8500
42	0101010	1.4500	106	1101010	2.9000
43	0101011	1.4750	107	1101011	2.9500
44	0101100	1.5000	108	1101100	3.0000
45	0101101	1.5250	109	1101101	3.0500

Table 64. SW3A/B output voltage configuration (continued)

Low output voltage range[50]			High output voltage range		
Set point	SW3x[6:0]	SW3x output	Set point	SW3x[6:0]	sw3x output
46	0101110	1.5500	110	1101110	3.1000
47	0101111	1.5750	111	1101111	3.1500
48	0110000	1.6000	112	1110000	3.2000
49	0110001	1.6250	113	1110001	3.2500
50	0110010	1.6500	114	1110010	3.3000
51	0110011	1.6750	115	1110011	Reserved
52	0110100	1.7000	116	1110100	Reserved
53	0110101	1.7250	117	1110101	Reserved
54	0110110	1.7500	118	1110110	Reserved
55	0110111	1.7750	119	1110111	Reserved
56	0111000	1.8000	120	1111000	Reserved
57	0111001	1.8250	121	1111001	Reserved
58	0111010	1.8500	122	1111010	Reserved
59	0111011	1.8750	123	1111011	Reserved
60	0111100	1.9000	124	1111100	Reserved
61	0111101	1.9250	125	1111101	Reserved
62	0111110	1.9500	126	1111110	Reserved
63	0111111	1.9750	127	1111111	Reserved

Notes
50. For voltages less than 2.0 V, only use set points 0 to 63.

Table 65 provides a list of registers used to configure and operate SW3A/B. A detailed description on each of these register is provided on Tables 66 through Table 75.

Table 65. SW3AB register summary

Register	Address	Output
SW3AVOLT	0x3C	SW3A output voltage set point on normal operation
SW3ASTBY	0x3D	SW3A output voltage set point on standby
SW3AOFF	0x3E	SW3A output voltage set point on sleep
SW3AMODE	0x3F	SW3A switching mode selector register
SW3ACONF	0x40	SW3A DVS, phase, frequency and ILIM configuration
SW3BVOLT	0x43	SW3B output voltage set point on normal operation
SW3BSTBY	0x44	SW3B output voltage set point on standby
SW3BOFF	0x45	SW3B output voltage set point on sleep
SW3BMODE	0x46	SW3B switching mode selector register
SW3BCONF	0x47	SW3B DVS, phase, frequency and ILIM configuration

Table 66. Register SW3AVOLT - ADDR 0x3C

Name	Bit #	R/W	Default	Description
SW3A	5:0	R/W	0x00	Sets the SW3A output voltage (Independent) or SW3A/B output voltage (single/dual phase), during normal operation mode. See Table 64 for all possible configurations.
SW3A	6	R	0x00	Sets the operating output voltage range for SW3A (independent) or SW3A/B (single/dual phase). Set during OTP or TBB configuration only. See Table 64 for all possible configurations.
UNUSED	7	–	0x00	unused

Table 67. Register SW3ASTBY - ADDR 0x3D

Name	Bit #	R/W	Default	Description
SW3ASTBY	5:0	R/W	0x00	Sets the SW3A output voltage (independent) or SW3A/B output voltage (single/dual phase), during standby mode. See Table 64 for all possible configurations.
SW3ASTBY	6	R	0x00	Sets the operating output voltage range for SW3A (independent) or SW3A/B (single/dual phase) on standby mode. This bit inherits the value configured on bit SW3A[6] during OTP or TBB configuration. See Table 64 for all possible configurations.
UNUSED	7	–	0x00	unused

Table 68. Register SW3AOFF - ADDR 0x3E

Name	Bit #	R/W	Default	Description
SW3AOFF	5:0	R/W	0x00	Sets the SW3A output voltage (independent) or SW3A/B output voltage (single/dual phase), during sleep mode. See Table 64 for all possible configurations.
SW3AOFF	6	R	0x00	Sets the operating output voltage range for SW3A (independent) or SW3A/B (single/dual phase) on sleep mode. This bit inherits the value configured on bit SW3A[6] during OTP or TBB configuration. See Table 64 for all possible configurations.
UNUSED	7	–	0x00	unused

Table 69. Register SW3AMODE - ADDR 0x3F

Name	Bit #	R/W	Default	Description
SW3AMODE	3:0	R/W	0x80	Sets the SW3A (Independent) or SW3A/B (single/dual phase) switching operation mode. See Table 29 for all possible configurations.
UNUSED	4	–	0x00	unused
SW3AOMODE	5	R/W	0x00	Set status of SW3A (independent) or SW3A/B (single/dual phase) when in sleep mode. 0 = OFF 1 = PFM
UNUSED	7:6	–	0x00	unused

Table 70. Register SW3ACONF - ADDR 0x40

Name	Bit #	R/W	Default	Description
SW3AILIM	0	R/W	0x00	SW3A current limit level selection 0 = High level current limit 1 = Low level current limit
UNUSED	1	R/W	0x00	unused
SW3AFREQ	3:2	R/W	0x00	SW3A switching frequency selector. See Table 37.
SW3APHASE	5:4	R/W	0x00	SW3A phase clock selection. See Table 35.
SW3ADVSSPEED	7:6	R/W	0x00	SW3A DVS speed selection. See Table 34.

Table 71. Register SW3BVOLT - ADDR 0x43

Name	Bit #	R/W	Default	Description
SW3B	5:0	R/W	0x00	Sets the SW3B output voltage (independent) during normal operation mode. See Table 64 for all possible configurations.
SW3B	6	R	0x00	Sets the operating output voltage range for SW3B (independent). Set during OTP or TBB configuration only. See Table 64 for all possible configurations.
UNUSED	7	–	0x00	unused

Table 72. Register SW3BSTBY - ADDR 0x44

Name	Bit #	R/W	Default	Description
SW3BSTBY	5:0	R/W	0x00	Sets the SW3B output voltage (Independent) during standby mode. See Table 64 for all possible configurations.
SW3BSTBY	6	R	0x00	Sets the operating output voltage range for SW3B (independent) on standby mode. This bit inherits the value configured on bit SW3B[6] during OTP or TBB configuration. See Table 64 for all possible configurations.
UNUSED	7	–	0x00	unused

Table 73. Register SW3BOFF - ADDR 0x45

Name	Bit #	R/W	Default	Description
SW3BOFF	5:0	R/W	0x00	Sets the SW3B output voltage (independent) during sleep mode. See Table 64 for all possible configurations.
SW3BOFF	6	R	0x00	Sets the operating output voltage range for SW3B (independent) on sleep mode. This bit inherits the value configured on bit SW3B[6] during OTP or TBB configuration. See Table 64 for all possible configurations.
UNUSED	7	–	0x00	unused

Table 74. Register SW3BMODE - ADDR 0x46

Name	Bit #	R/W	Default	Description
SW3BMODE	3:0	R/W	0x80	Sets the SW3B (Independent) switching operation mode. See Table 29 for all possible configurations.
UNUSED	4	–	0x00	unused
SW3BOMODE	5	R/W	0x00	Set status of SW3B (Independent) when in sleep mode. 0 = OFF 1 = PFM
UNUSED	7:6	–	0x00	unused

Table 75. Register SW3BCONF - ADDR 0x47

Name	Bit #	R/W	Default	Description
SW3BILIM	0	R/W	0x00	SW3B current limit level selection 0 = High level current limit 1 = Low level current limit
UNUSED	1	R/W	0x00	unused
SW3BFREQ	3:2	R/W	0x00	SW3B switching frequency selector. See Table 37.
SW3BPHASE	5:4	R/W	0x00	SW3B phase clock selection. See Table 35.
SW3BDVSSPEED	7:6	R/W	0x00	SW3B DVS speed selection. See Table 34.

6.4.4.5.5 SW3A/B external components

Table 76. SW3A/B external component requirements

		Mode		
Components	**Description**	**SW3A/B single phase**	**SW3A/B dual phase**	**SW3A independent SW3B independent**
C_{INSW3A}[51]	SW3A input capacitor	4.7 µF	4.7 µF	4.7 µF
C_{IN3AHF}[51]	SW3A decoupling input capacitor	0.1 µF	0.1 µF	0.1 µF
C_{INSW3B}[51]	SW3B input capacitor	4.7 µF	4.7 µF	4.7 µF
C_{IN3BHF}[51]	SW3B decoupling input capacitor	0.1 µF	0.1 µF	0.1 µF
C_{OSW3A}[51]	SW3A output capacitor	4 x 22 µF	2 x 22 µF	2 x 22 µF
C_{OSW3B}[51]	SW3B output capacitor	–	2 x 22 µF	2 x 22 µF
L_{SW3A}	SW3A inductor	1.0 µH DCR = 50 mΩ I_{SAT} = 3.9 A	1.0 µH DCR = 60 mΩ I_{SAT} = 3.0 A	1.0 µH DCR = 60 mΩ I_{SAT} = 3.0 A
L_{SW3B}	SW3B inductor	–	1.0 µH DCR = 60 mΩ I_{SAT} = 3.0 A	1.0 µH DCR = 60 mΩ I_{SAT} = 3.0 A

Notes
51. Use X5R or X7R capacitors.

6.4.4.5.6 SW3A/B specifications

Table 77. SW3A/B electrical characteristics

All parameters are specified at PF0100Z T_A = -40 °C to 85 °C, PF0100AZ T_A = -40 °C to 105 °C, V_{IN} = VIN_{SW3x} = 3.6 V, V_{SW3x} = 1.5 V, I_{SW3x} = 100 mA, SW3x_PWRSTG[2:0] = [111], typical external component values, f_{SW3x} = 2.0 MHz, single/dual phase and independent mode, unless otherwise noted. Typical values are characterized at V_{IN} = VIN_{SW3x} = 3.6 V, V_{SW3x} = 1.5 V, I_{SW3x} = 100 mA, SW3x_PWRSTG[2:0] = [111], and 25 °C, unless otherwise noted.

Symbol	Parameter	Min.	Typ.	Max.	Unit	Notes
Switch mode supply SW3a/B						
VIN_{SW3x}	Operating input voltage	2.8	–	4.5	V	(52)
V_{SW3x}	Nominal output voltage	-	Table 64	-	V	
$V_{SW3xACC}$	Output voltage accuracy • PWM, APS 2.8 V < V_{IN} < 4.5 V, 0 < I_{SW3x} < $ISW3x_{MAX}$ 0.625 V < V_{SW3x} < 0.85 V 0.875 V < V_{SW3x} < 1.975 V 2.0 V < V_{SW3x} < 3.3 V • PFM , steady state (2.8 V < V_{IN} < 4.5 V, 0 < I_{SW3x} < 50 mA) 0.625 V < V_{SW3x} < 0.675 V 0.7 V < V_{SW3x} < 0.85 V 0.875 V < V_{SW3x} < 1.975 V 2.0 V < V_{SW3x} < 3.3 V	 -25 -3.0% -6.0% -65 -45 -3.0% -3.0%	 – – – – – – –	 25 3.0% 6.0% 65 45 3.0% 3.0%	mV %	
I_{SW3x}	Rated output load current • 2.8 V < V_{IN} < 4.5 V, 0.625 V < V_{SW3x} < 3.3 V PWM, APS mode single/dual phase PWM, APS mode independent (per phase)	 – –	 – –	 2500 1250	mA	(53)
$I_{SW3xLIM}$	Current limiter peak current detection • Single phase (current through inductor) SW3xILIM = 0 SW3xILIM = 1 • Independent mode or dual phase (current through inductor per phase) SW3xILIM = 0 SW3xILIM = 1	 3.5 2.7 1.8 1.3	 5.0 3.8 2.5 1.9	 6.5 4.9 3.3 2.5	A	
$V_{SW3xOSH}$	Start-up overshoot I_{SW3x} = 0.0 mA DVS clk = 25 mV/4 µs, V_{IN} = VIN_{SW3x} = 4.5 V	–	–	66	mV	
tON_{SW3x}	Turn-on time Enable to 90% of end value I_{SW3x} = 0 mA DVS clk = 25 mV/4 µs, V_{IN} = VIN_{SW3x} = 4.5 V	–	–	500	µs	
f_{SW3x}	Switching frequency SW3xFREQ[1:0] = 00 SW3xFREQ[1:0] = 01 SW3xFREQ[1:0] = 10	 – – –	 1.0 2.0 4.0	 – – –	MHz	
η_{SW3AB}	Efficiency (single phase) • f_{SW3} = 2.0 MHz, L_{SW3x} 1.0 µH PFM, 1.5 V, 1.0 mA PFM, 1.5 V, 50 mA APS, PWM 1.5 V, 500 mA APS, PWM 1.5 V, 750 mA APS, PWM 1.5 V, 1250 mA APS, PWM 1.5 V, 2500 mA	 – – – – – –	 84 85 89 89 85 80	 – – – – – –	%	
ΔV_{SW3x}	Output ripple	–	10	–	mV	

Table 77. SW3A/B electrical characteristics (continued)

All parameters are specified at PF0100Z T_A = -40 °C to 85 °C, PF0100AZ T_A = -40 °C to 105 °C, V_{IN} = VIN_{SW3x} = 3.6 V, V_{SW3x} = 1.5 V, I_{SW3x} = 100 mA, SW3x_PWRSTG[2:0] = [111], typical external component values, f_{SW3x} = 2.0 MHz, single/dual phase and independent mode, unless otherwise noted. Typical values are characterized at V_{IN} = VIN_{SW3x} = 3.6 V, V_{SW3x} = 1.5 V, I_{SW3x} = 100 mA, SW3x_PWRSTG[2:0] = [111], and 25 °C, unless otherwise noted.

Symbol	Parameter	Min.	Typ.	Max.	Unit	Notes
Switch mode supply SW3a/B (continued)						
$V_{SW3xLIR}$	Line regulation (APS, PWM)	–	–	20	mV	
$V_{SW3xLOR}$	DC load regulation (APS, PWM)	–	–	20	mV	
$V_{SW3xLOTR}$	Transient load regulation • Transient load = 0.0 mA to I_{SW3x}/2, di/dt = 100 mA/µs Overshoot Undershoot	 – –	 – –	 50 50	mV	
I_{SW3xQ}	Quiescent current PFM mode (single/dual phase) APS mode (single/dual phase) PFM mode (independent mode) APS mode (SW3A independent mode) APS mode (SW3B independent mode)	 – – – – –	 22 300 50 250 150	 – – – – –	µA	
$R_{ONSW3AP}$	SW3A P-MOSFET $R_{DS(on)}$ at V_{IN} = VIN_{SW3A} = 3.3 V	–	215	245	mΩ	
$R_{ONSW3AN}$	SW3A N-MOSFET $R_{DS(on)}$ at V_{IN} = VIN_{SW3A} = 3.3 V	–	258	326	mΩ	
I_{SW3APQ}	SW3A P-MOSFET leakage current V_{IN} = VIN_{SW3A} = 4.5 V	–	–	7.5	µA	
I_{SW3ANQ}	SW3A N-MOSFET leakage current V_{IN} = VIN_{SW3A} = 4.5 V	–	–	2.5	µA	
$R_{ONSW3BP}$	SW3B P-MOSFET $R_{DS(on)}$ at V_{IN} = VIN_{SW3B} = 3.3 V	–	215	245	mΩ	
$R_{ONSW3BN}$	SW3B N-MOSFET $R_{DS(on)}$ at V_{IN} = VIN_{SW3B} = 3.3 V	–	258	326	mΩ	
I_{SW3BPQ}	SW3B P-MOSFET leakage current V_{IN} = VIN_{SW3B} = 4.5 V	–	–	7.5	µA	
I_{SW3BPQ}	SW3B N-MOSFET leakage current V_{IN} = VIN_{SW3B} = 4.5 V	–	–	2.5	µA	
$R_{SW3xDIS}$	Discharge resistance	–	600	–	W	

Notes

52. When output is set to > 2.6 V the output will follow the input down when V_{IN} gets near 2.8 V.
53. The higher output voltages available depend on the voltage drop in the conduction path as given by the following equation: (VIN_{SW3x} - V_{SW3x}) = I_{SW3x}* (DCR of Inductor +$R_{ONSW3xP}$ + PCB trace resistance).

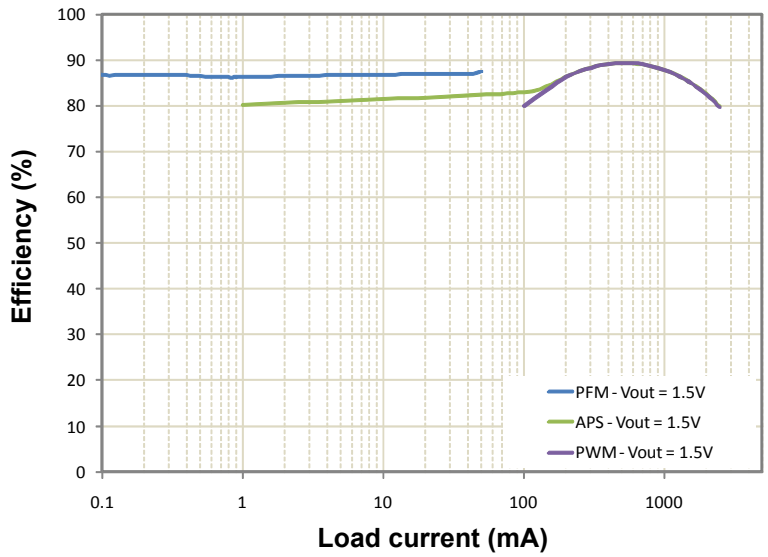

Figure 20. SW3AB single phase efficiency waveforms

6.4.4.6 SW4

SW4 is a 1.0 A rated single phase buck regulator capable of operating in two modes. In its default mode, it operates as a normal buck regulator with a programmable output between 0.400 V and 3.300 V. It is capable of operating in the three available switching modes: PFM, APS, and PWM, described on Table 29 and configured by the SW4MODE[3:0] bits, as shown in Table 30.

If the system requires DDR memory termination, SW4 can be used in its VTT mode. In the VTT mode, its reference voltage tracks the output voltage of SW3A, scaled by 0.5. Furthermore, when in VTT mode, only the PWM switching mode is allowed. The VTT mode can be configured by use of VTT bit in the OTP_SW4_CONFIG register.

Figure 21 shows the block diagram and the external component connections for the SW4 regulator.

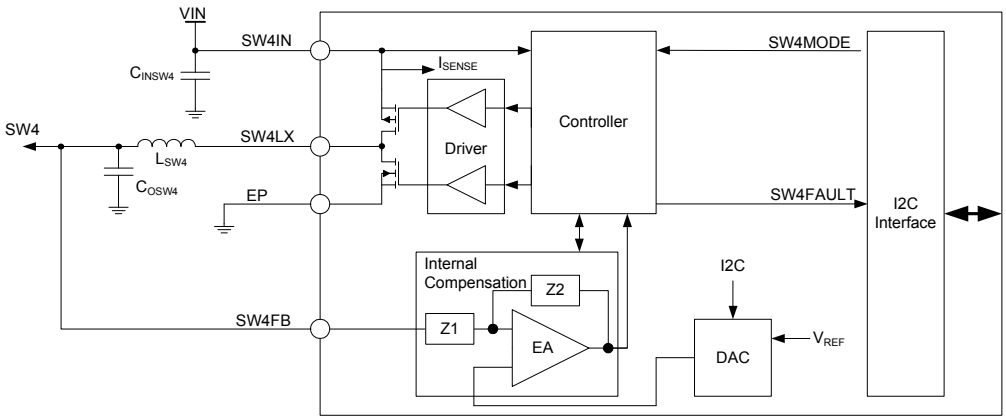

Figure 21. SW4 block diagram

6.4.4.6.1 SW4 setup and control registers

To set the SW4 in regulator or VTT mode, bit VTT of the register OTP_SW4_CONF register on Table 136. Extended page 1, page 106, is programmed during OTP or TBB configuration; setting bit VTT to “1” enables SW4 to operate in VTT mode and “0” in Regulator mode. See 6.1.2 One time programmability (OTP), page 20 for detailed information on OTP configuration.

In regulator mode, the SW4 output voltage is programmable from 0.400 V to 3.300 V; however, bit SW4[6] in the SW4VOLT register is read-only during normal operation. Its value is determined by the default configuration, or may be changed by using the OTP registers. Once SW4[6] is set to “0”, the output is limited to the lower output voltages, from 0.400 V to 1.975 V with 25 mV increments, as determined by the SW4[5:0] bits. Likewise, once the SW4[6] bit is set to "1", the output voltage is limited to the higher output voltage range from 0.800 V to 3.300 V with 50 mV increments, as determined by the SW4[5:0] bits.

To optimize the performance of the regulator, it is recommended that only voltages from 2.000 V to 3.300 V be used in the high range and that that the lower range be used for voltages from 0.400 V to 1.975 V.

The output voltage set point is independently programmed for normal, standby, and sleep mode by setting the SW4[5:0], SW4STBY[5:0], and SW4OFF[5:0] bits, respectively. However, the initial state of the SW4[6] bit is copied into bits SW4STBY[6], and SW4OFF[6] bits, so the output voltage range remains the same on all three operating modes. Table 78 shows the output voltage coding valid for SW4.

Note: Voltage set points of 0.6 V and below are not supported, except in VTT mode.

Table 78. SW4 output voltage configuration

Low output voltage range[54]			High output voltage range		
Set Point	**SW4[6:0]**	**SW4 output**	**Set Point**	**SW4[6:0]**	**SW4 output**
0	0000000	0.4000	64	1000000	0.8000
1	0000001	0.4250	65	1000001	0.8500
2	0000010	0.4500	66	1000010	0.9000
3	0000011	0.4750	67	1000011	0.9500
4	0000100	0.5000	68	1000100	1.0000
5	0000101	0.5250	69	1000101	1.0500
6	0000110	0.5500	70	1000110	1.1000
7	0000111	0.5750	71	1000111	1.1500
8	0001000	0.6000	72	1001000	1.2000
9	0001001	0.6250	73	1001001	1.2500
10	0001010	0.6500	74	1001010	1.3000
11	0001011	0.6750	75	1001011	1.3500
12	0001100	0.7000	76	1001100	1.4000
13	0001101	0.7250	77	1001101	1.4500
14	0001110	0.7500	78	1001110	1.5000
15	0001111	0.7750	79	1001111	1.5500
16	0010000	0.8000	80	1010000	1.6000
17	0010001	0.8250	81	1010001	1.6500
18	0010010	0.8500	82	1010010	1.7000
19	0010011	0.8750	83	1010011	1.7500
20	0010100	0.9000	84	1010100	1.8000
21	0010101	0.9250	85	1010101	1.8500
22	0010110	0.9500	86	1010110	1.9000
23	0010111	0.9750	87	1010111	1.9500
24	0011000	1.0000	88	1011000	2.0000
25	0011001	1.0250	89	1011001	2.0500
26	0011010	1.0500	90	1011010	2.1000
27	0011011	1.0750	91	1011011	2.1500
28	0011100	1.1000	92	1011100	2.2000
29	0011101	1.1250	93	1011101	2.2500
30	0011110	1.1500	94	1011110	2.3000
31	0011111	1.1750	95	1011111	2.3500
32	0100000	1.2000	96	1100000	2.4000
33	0100001	1.2250	97	1100001	2.4500
34	0100010	1.2500	98	1100010	2.5000

Table 78. SW4 output voltage configuration (continued)

Low output voltage range[54]			High output voltage range		
Set Point	SW4[6:0]	SW4 output	Set Point	SW4[6:0]	SW4 output
35	0100011	1.2750	99	1100011	2.5500
36	0100100	1.3000	100	1100100	2.6000
37	0100101	1.3250	101	1100101	2.6500
38	0100110	1.3500	102	1100110	2.7000
39	0100111	1.3750	103	1100111	2.7500
40	0101000	1.4000	104	1101000	2.8000
41	0101001	1.4250	105	1101001	2.8500
42	0101010	1.4500	106	1101010	2.9000
43	0101011	1.4750	107	1101011	2.9500
44	0101100	1.5000	108	1101100	3.0000
45	0101101	1.5250	109	1101101	3.0500
46	0101110	1.5500	110	1101110	3.1000
47	0101111	1.5750	111	1101111	3.1500
48	0110000	1.6000	112	1110000	3.2000
49	0110001	1.6250	113	1110001	3.2500
50	0110010	1.6500	114	1110010	3.3000
51	0110011	1.6750	115	1110011	Reserved
52	0110100	1.7000	116	1110100	Reserved
53	0110101	1.7250	117	1110101	Reserved
54	0110110	1.7500	118	1110110	Reserved
55	0110111	1.7750	119	1110111	Reserved
56	0111000	1.8000	120	1111000	Reserved
57	0111001	1.8250	121	1111001	Reserved
58	0111010	1.8500	122	1111010	Reserved
59	0111011	1.8750	123	1111011	Reserved
60	0111100	1.9000	124	1111100	Reserved
61	0111101	1.9250	125	1111101	Reserved
62	0111110	1.9500	126	1111110	Reserved
63	0111111	1.9750	127	1111111	Reserved

Notes

54. For voltages less than 2.0 V, only use set points 0 to 63.

Full setup and control of SW4 is done through the I^2C registers listed on Table 79, and a detailed description of each one of the registers is provided in Tables 80 to Table 84.

Table 79. SW4 register summary

Register	Address	Description
SW4VOLT	0x4A	Output voltage set point on normal operation
SW4STBY	0x4B	Output voltage set point on standby
SW4OFF	0x4C	Output voltage set point on sleep
SW4MODE	0x4D	Switching mode selector register
SW4CONF	0x4E	DVS, phase, frequency and ILIM configuration

Table 80. Register SW4VOLT - ADDR 0x4A

Name	Bit #	R/W	Default	Description
SW4	5:0	R/W	0x00	Sets the SW4 output voltage during normal operation mode. See Table 78 for all possible configurations.
SW4	6	R	0x00	Sets the operating output voltage range for SW4. Set during OTP or TBB configuration only. See Table 78 for all possible configurations.
UNUSED	7	–	0x00	unused

Table 81. Register SW4STBY - ADDR 0x4B

Name	Bit #	R/W	Default	Description
SW4STBY	5:0	R/W	0x00	Sets the SW4 output voltage during standby mode. See Table 78 for all possible configurations.
SW4STBY	6	R	0x00	Sets the operating output voltage range for SW4 on standby mode. This bit inherits the value configured on bit SW4[6] during OTP or TBB configuration. See Table 78 for all possible configurations.
UNUSED	7	–	0x00	unused

Table 82. Register SW4OFF - ADDR 0x4C

Name	Bit #	R/W	Default	Description
SW4OFF	5:0	R/W	0x00	Sets the SW4 output voltage during sleep mode. See Table 78 for all possible configurations.
SW4OFF	6	R	0x00	Sets the operating output voltage range for SW4 on sleep mode. This bit inherits the value configured on bit SW4[6] during OTP or TBB configuration. See Table 78 for all possible configurations.
UNUSED	7	–	0x00	unused

Table 83. Register SW4MODE - ADDR 0x4D

Name	Bit #	R/W	Default	Description
SW4MODE	3:0	R/W	0x80	Sets the SW4 switching operation mode. See Table 29 for all possible configurations.
UNUSED	4	–	0x00	unused
SW4OMODE	5	R/W	0x00	Set status of SW4 when in sleep mode 0 = OFF 1 = PFM
UNUSED	7:6	–	0x00	unused

Table 84. Register SW4CONF - ADDR 0x4E

Name	Bit #	R/W	Default	Description
SW4ILIM	0	R/W	0x00	SW4 current limit level selection 0 = High level Current limit 1 = Low level Current limit
UNUSED	1	R/W	0x00	unused
SW4FREQ	3:2	R/W	0x00	SW4 switching frequency selector. See Table 37.
SW4PHASE	5:4	R/W	0x00	SW4 phase clock selection. See Table 35.
SW4DVSSPEED	7:6	R/W	0x00	SW4 DVS speed selection. See Table 34.

6.4.4.6.2 SW4 external components

Table 85. SW4 external component requirements

Components	Description	Values
C_{INSW4} [55]	SW4 input capacitor	4.7 µF
C_{IN4HF} [55]	SW4 decoupling input capacitor	0.1 µF
C_{OSW4} [55]	SW4 output capacitor	2 x 22 µF
L_{SW4}	SW4 inductor	1.0 µH DCR = 60 mΩ I_{SAT} = 3.0 A

Notes
55. Use X5R or X7R capacitors.

6.4.4.6.3 SW4 specifications

Table 86. SW4 electrical characteristics

All parameters are specified at PF0100Z T_A = -40 °C to 85 °C, PF0100AZ T_A = -40 °C to 105 °C, V_{IN} = VIN_{SW4} = 3.6 V, V_{SW4} = 1.8 V, I_{SW4} = 100 mA, SW4_PWRSTG[2:0] = [101], typical external component values, f_{SW4} = 2.0 MHz, single/dual phase and independent mode, unless otherwise noted. Typical values are characterized at V_{IN} = VIN_{SW4} = 3.6 V, V_{SW4} = 1.8 V, I_{SW4} = 100 mA, SW4_PWRSTG[2:0] = [101], and 25 °C, unless otherwise noted.

Symbol	Parameter	Min.	Typ.	Max.	Unit	Notes
Switch Mode Supply SW4						
VIN_{SW4}	Operating input voltage	2.8	–	4.5	V	[56]
V_{SW4}	Nominal output voltage Normal operation VTT mode	 – –	 Table 78 V_{SW3AFB}/2	 – –	V	
V_{SW4ACC}	Output voltage accuracy • PWM, APS, 2.8 V < V_{IN} < 4.5 V, 0 < I_{SW4} < 1.0 A 0.625 V < V_{SW4} < 0.85 V 0.875 V < V_{SW4} < 1.975 V 2.0 V < V_{SW4} < 3.3 V • PFM, steady state, 2.8 V < V_{IN} < 4.5 V, 0 < I_{SW4} < 50 mA 0.625 V < V_{SW4} < 0.675 V 0.7 V < V_{SW4} < 0.85 V 0.875 V < V_{SW4} < 1.975 V 2.0 V < V_{SW4} < 3.3 V • VTT mode , 2.8 V < V_{IN} < 4.5 V, 0 < I_{SW4} < 1.0 A	 -25 -3.0% -6.0% -65 -45 -3.0% -3.0% -40	 – – – – – – – –	 25 3.0% 6.0% 65 45 3.0% 3.0% 40	mV %	

Table 86. SW4 electrical characteristics (continued)

All parameters are specified at PF0100Z T_A = -40 °C to 85 °C, PF0100AZ T_A = -40 °C to 105 °C, V_{IN} = VIN_{SW4} = 3.6 V, V_{SW4} = 1.8 V, I_{SW4} = 100 mA, SW4_PWRSTG[2:0] = [101], typical external component values, f_{SW4} = 2.0 MHz, single/dual phase and independent mode, unless otherwise noted. Typical values are characterized at V_{IN} = VIN_{SW4} = 3.6 V, V_{SW4} = 1.8 V, I_{SW4} = 100 mA, SW4_PWRSTG[2:0] = [101], and 25 °C, unless otherwise noted.

Symbol	Parameter	Min.	Typ.	Max.	Unit	Notes
Switch mode supply SW4 (continued)						
I_{SW4}	Rated output load current 2.8 V < V_{IN} < 4.5 V, 0.625 V < V_{SW4} < 3.3 V	–	–	1000	mA	(57)
I_{SW4LIM}	Current limiter peak current detection Current through inductor SW4ILIM = 0 SW4ILIM = 1	 1.4 1.0	 2.0 1.5	 3.0 2.4	A	
V_{SW4OSH}	Start-up overshoot I_{SW4} = 0.0 mA DVS clk = 25 mV/4 µs, V_{IN} = VIN_{SW4} = 4.5 V	–	–	66	mV	
tON_{SW4}	Turn-on time Enable to 90% of end value I_{SW4} = 0.0 mA DVS clk = 25 mV/4 µs, V_{IN} = VIN_{SW4} = 4.5 V	–	–	500	µs	
f_{SW4}	Switching frequency SW4FREQ[1:0] = 00 SW4FREQ[1:0] = 01 SW4FREQ[1:0] = 10	 – – –	 1.0 2.0 4.0	 – – –	MHz	
η_{SW4}	Efficiency • f_{SW4} = 2.0 MHz, L_{SW4} = 1.0 µH PFM, 1.8 V, 1.0 mA PFM, 1.8 V, 50 mA APS, PWM 1.8 V, 200 mA APS, PWM 1.8 V, 500 mA APS, PWM 1.8 V, 1000 mA PWM 0.75 V, 200 mA PWM 0.75 V, 500 mA PWM 0.75 V, 1000 mA	 – – – – – – – –	 81 78 87 88 84 78 76 66	 – – – – – – – –	%	
ΔV_{SW4}	Output ripple	–	10	–	mV	
V_{SW4LIR}	Line regulation (APS, PWM)	–	–	20	mV	
V_{SW4LOR}	DC load regulation (APS, PWM)	–	–	20	mV	
$V_{SW4LOTR}$	Transient load regulation • Transient load = 0.0 mA to 500 mA, di/dt = 100 mA/µs Overshoot Undershoot	 – –	 – –	 50 50	mV	
I_{SW4Q}	Quiescent current PFM mode APS mode	 – –	 22 145	 – –	µA	
R_{ONSW4P}	SW4 P-MOSFET $R_{DS(on)}$ at V_{IN} = VIN_{SW4} = 3.3 V	–	236	274	mΩ	
R_{ONSW4N}	SW4 N-MOSFET $R_{DS(on)}$ at V_{IN} = VIN_{SW4} = 3.3 V	–	293	378	mΩ	
I_{SW4PQ}	SW4 P-MOSFET leakage current V_{IN} = VIN_{SW4} = 4.5 V	–	–	6.0	µA	
I_{SW4NQ}	SW4 N-MOSFET leakage current V_{IN} = VIN_{SW4} = 4.5 V	–	–	2.0	µA	

Table 86. SW4 electrical characteristics (continued)

All parameters are specified at PF0100Z T_A = -40 °C to 85 °C, PF0100AZ T_A = -40 °C to 105 °C, V_{IN} = VIN_{SW4} = 3.6 V, V_{SW4} = 1.8 V, I_{SW4} = 100 mA, SW4_PWRSTG[2:0] = [101], typical external component values, f_{SW4} = 2.0 MHz, single/dual phase and independent mode, unless otherwise noted. Typical values are characterized at V_{IN} = VIN_{SW4} = 3.6 V, V_{SW4} = 1.8 V, I_{SW4} = 100 mA, SW4_PWRSTG[2:0] = [101], and 25 °C, unless otherwise noted.

Symbol	Parameter	Min.	Typ.	Max.	Unit	Notes
R_{SW4DIS}	Discharge Resistance	–	600	–	W	

Notes

56. When the output is set to > 2.6 V, the output follows the input down when V_{IN} gets near 2.8 V.
57. The higher output voltages available depend on the voltage drop in the conduction path as given by the following equation: (VIN_{SW4} - V_{SW4}) = I_{SW4}* (DCR of Inductor +R_{ONSW4P} + PCB trace resistance).

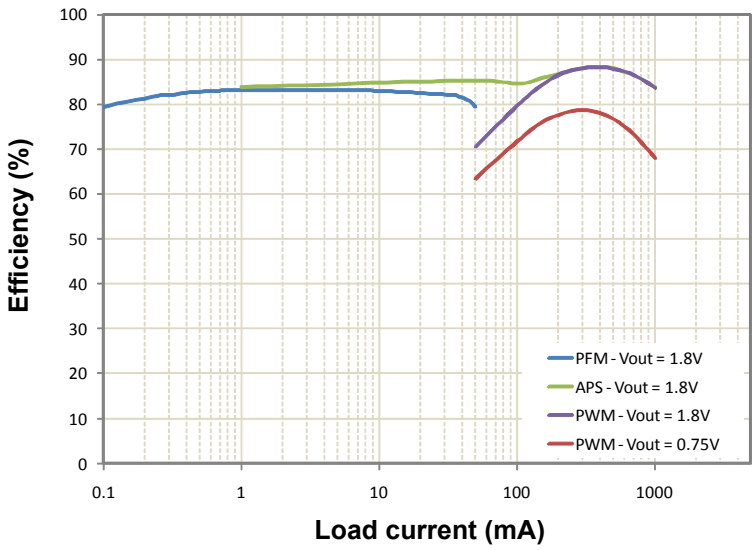

Figure 22. SW4 efficiency waveforms

6.4.5 Boost regulator

SWBST is a boost regulator with a programmable output from 5.0 V to 5.15 V. SWBST can supply the VUSB regulator for the USB PHY in OTG mode, as well as the VBUS voltage. Note that the parasitic leakage path for a boost regulator causes the SWBSTOUT and SWBSTFB voltage to be a Schottky drop below the input voltage whenever SWBST is disabled. The switching NMOS transistor is integrated on-chip. Figure 23 shows the block diagram and component connection for the boost regulator.

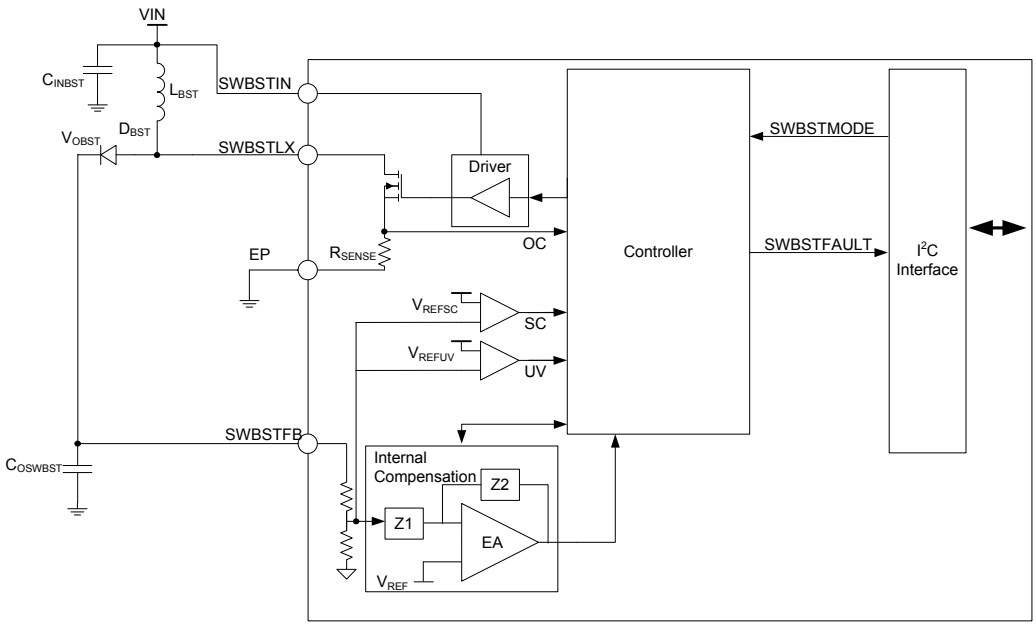

Figure 23. Boost Regulator Architecture

6.4.5.1 SWBST setup and control

Boost regulator control is done through a single register SWBSTCTL described in Table 87. SWBST is included in the power-up sequence if its OTP power-up timing bits, SWBST_SEQ[4:0], are not all zeros.

Table 87. Register SWBSTCTL - ADDR 0x66

Name	Bit #	R/W	Default	Description
SWBST1VOLT	1:0	R/W	0x00	Set the output voltage for SWBST 00 = 5.000 V 01 = 5.050 V 10 = 5.100 V 11 = 5.150 V
SWBST1MODE	3:2	R	0x02	Set the switching mode on normal operation 00 = OFF 01 = PFM 10 = Auto (Default)[58] 11 = APS
UNUSED	4	–	0x00	unused
SWBST1STBYMODE	6:5	R/W	0x02	Set the switching mode on standby 00 = OFF 01 = PFM 10 = Auto (Default)[58] 11 = APS
UNUSED	7	–	0x00	unused

Notes

58. In auto mode, the controller automatically switches between PFM and APS modes depending on the load current. The SWBST regulator starts up by default in the auto mode, if SWBST is part of the startup sequence.

6.4.5.2 SWBST external components

Table 88. SWBST external component requirements

Components	Description	Values
C_{INBST}[59]	SWBST input capacitor	10 µF
$C_{INBSTHF}$[59]	SWBST decoupling input capacitor	0.1 µF
C_{OBST}[59]	SWBST output capacitor	2 x 22 µF
L_{SBST}	SWBST inductor	2.2 µH
D_{BST}	SWBST boost diode	1.0 A, 20 V Schottky

Notes
59. Use X5R or X7R capacitors.

6.4.5.3 SWBST specifications

Table 89. SWBST electrical specifications

All parameters are specified at PF0100Z T_A = -40 °C to 85 °C, PF0100AZ T_A = -40 °C to 105 °C, V_{IN} = VIN_{SWBST} = 3.6 V, V_{SWBST} = 5.0 V, I_{SWBST} = 100 mA, typical external component values, f_{SWBST} = 2.0 MHz, otherwise noted. Typical values are characterized at V_{IN} = VIN_{SWBST} = 3.6 V, V_{SWBST} = 5.0 V, I_{SWBST} = 100 mA, and 25 °C, unless otherwise noted.

Symbol	Parameters	Min.	Typ.	Max.	Units	Notes
Switch mode supply SWBST						
VIN_{SWBST}	Input voltage range	2.8	–	4.5	V	
V_{SWBST}	Nominal output voltage	–	Table 87	–	V	
$V_{SWBSTACC}$	Output voltage accuracy 2.8 V ≤ V_{IN} ≤ 4.5 V 0 < I_{SWBST} < $ISWBST_{MAX}$	-4.0	–	3.0	%	
ΔV_{SWBST}	Output ripple 2.8 V ≤ V_{IN} ≤ 4.5 V 0 < I_{SWBST} < $ISWBST_{MAX}$, excluding reverse recovery of Schottky diode	–	–	120	mV Vp-p	
$V_{SWBSTLOR}$	DC load regulation 0 < I_{SWBST} < $ISWBST_{MAX}$	–	0.5	–	mV/mA	
$V_{SWBSTLIR}$	DC line regulation 2.8 V ≤ V_{IN} ≤ 4.5 V, I_{SWBST} = $ISWBST_{MAX}$	–	50	–	mV	
I_{SWBST}	Continuous load current 2.8 V ≤ V_{IN} ≤ 3.0 V 3.0 V ≤ V_{IN} ≤ 4.5 V	– –	– –	500 600	mA	
I_{SWBSTQ}	Quiescent current auto	–	222	289	µA	
$R_{DSONBST}$	MOSFET on resistance	–	206	306	mΩ	
$I_{SWBSTLIM}$	Peak current limit	1400	2200	3200	mA	[60]
$V_{SWBSTOSH}$	Start-up overshoot I_{SWBST} = 0.0 mA	–	–	500	mV	
$V_{SWBSTTR}$	Transient load response I_{SWBST} from 1.0 mA to 100 mA in 1.0 µs Maximum transient amplitude	–	–	300	mV	
$V_{SWBSTTR}$	Transient load response I_{SWBST} from 100 mA to 1.0 mA in 1.0 µs Maximum transient amplitude	–	–	300	mV	

Table 89. SWBST electrical specifications (continued)

All parameters are specified at PF0100Z T_A = -40 °C to 85 °C, PF0100AZ T_A = -40 °C to 105 °C, V_{IN} = VIN_{SWBST} = 3.6 V, V_{SWBST} = 5.0 V, I_{SWBST} = 100 mA, typical external component values, f_{SWBST} = 2.0 MHz, otherwise noted. Typical values are characterized at V_{IN} = VIN_{SWBST} = 3.6 V, V_{SWBST} = 5.0 V, I_{SWBST} = 100 mA, and 25 °C, unless otherwise noted.

Symbol	Parameters	Min.	Typ.	Max.	Units	Notes
Switch mode supply SWBST (continued)						
$t_{SWBSTTR}$	Transient load response I_{SWBST} from 1.0 mA to 100 mA in 1.0 µs Time to settle 80% of transient	–	–	500	µs	
$t_{SWBSTTR}$	Transient load response I_{SWBST} from 100 mA to 1.0 mA in 1.0 µs Time to settle 80% of transient	–	–	20	ms	
$I_{SWBSTHSQ}$	NMOS Off leakage SWBSTIN = 4.5 V, SWBSTMODE [1:0] = 00	–	1.0	5.0	µA	
tON_{SWBST}	Turn-on time Enable to 90% of V_{SWBST}, I_{SWBST} = 0.0 mA	–	–	2.0	ms	
f_{SWBST}	Switching frequency	–	2.0	–	MHz	
η_{SWBST}	Efficiency I_{SWBST} = $ISWBST_{MAX}$	–	86	–	%	

Notes

60. Only in auto mode.

6.4.6 LDO regulators description

This section describes the LDO regulators provided by the PF0100Z. All regulators use the main bandgap as reference. Refer to 6.3 Bias and references block description, page 23 for further information on the internal reference voltages.

A low-power mode is automatically activated by reducing bias currents when the load current is less than I_Lmax/5. However, the lowest bias currents may be attained by forcing the part into its low-power mode by setting the VGENxLPWR bit. The use of this bit is only recommended when the load is expected to be less than I_Lmax/50, otherwise performance may be degraded. When a regulator is disabled, the output is discharged by an internal pull-down. The pull-down is also activated when RESETBMCU is low.

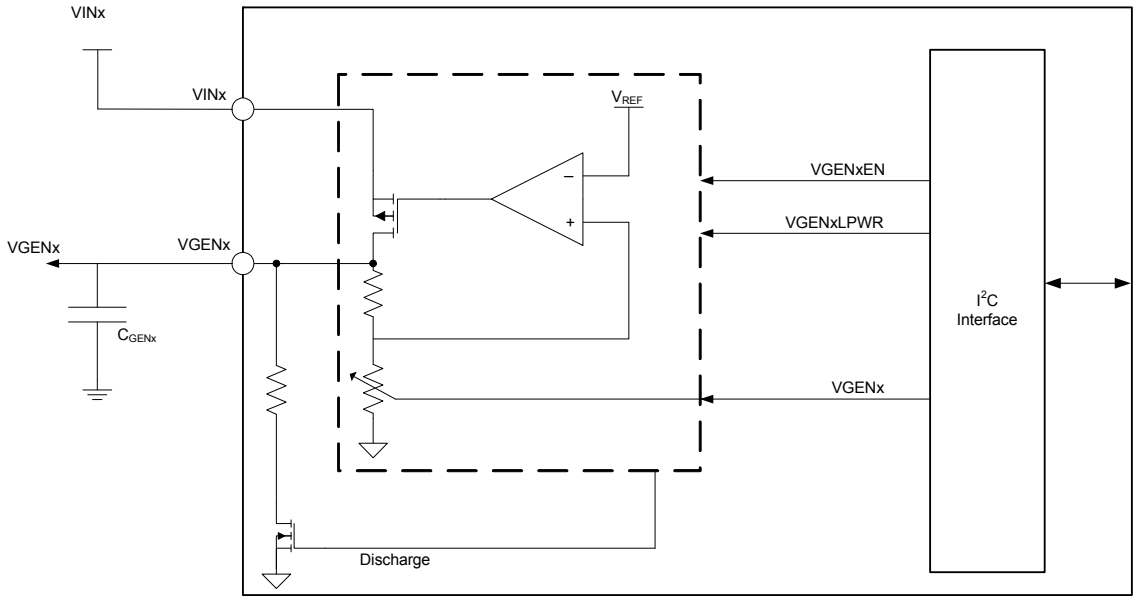

Figure 24. General LDO block diagram

6.4.6.1 Transient response waveforms

Idealized stimulus and response waveforms for transient line and transient load tests are depicted in Figure 25. Note that the transient line and load response refers to the overshoot, or undershoot only, excluding the DC shift.

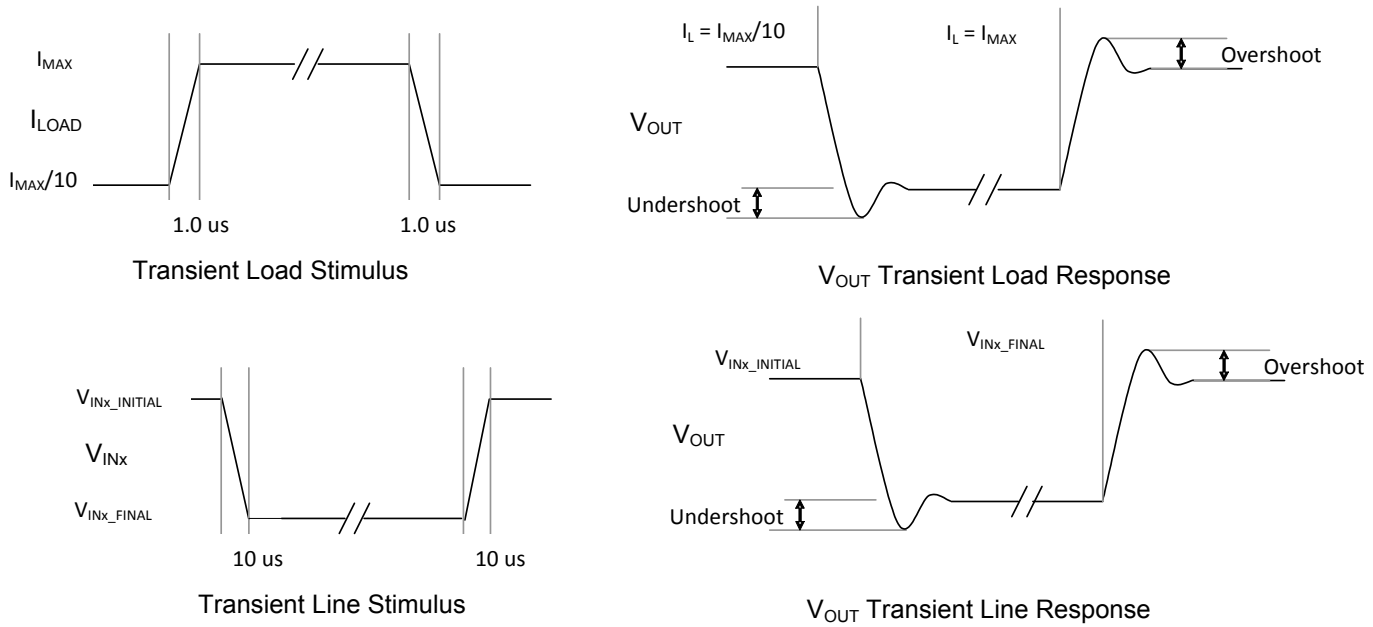

Figure 25. Transient waveforms

6.4.6.2 Short-circuit protection

All general purpose LDOs have short-circuit protection capability. The short-circuit protection (SCP) system includes debounced fault condition detection, regulator shutdown, and processor interrupt generation, to contain failures and minimize the chance of product damage. If a short-circuit condition is detected, the LDO is disabled by resetting its VGENxEN bit, while at the same time, an interrupt VGENxFAULTI is generated to flag the fault to the system processor. The VGENxFAULTI interrupt is maskable through the VGENxFAULTM mask bit.

The SCP feature is enabled by setting the REGSCPEN bit. If this bit is not set, the regulators do not automatically disable upon a short-circuit detection. However, the current limiter continues to limit the output current of the regulator. By default, the REGSCPEN is not set; therefore, at start-up none of the regulators are disabled if an overloaded condition occurs. A fault interrupt, VGENxFAULTI, is generated in an overload condition regardless of the state of the REGSCPEN bit. See Table 90 for SCP behavior configuration.

Table 90. Short-circuit behavior

REGSCPEN[0]	Short-circuit behavior
0	Current limit
1	Shutdown

6.4.6.3 LDO regulator control

Each LDO is fully controlled through its respective VGENxCTL register. This register enables the user to set the LDO output voltage according to Table 91 for VGEN1 and VGEN2; and uses the voltage set point on Table 92 for VGEN3 through VGEN6.

Table 91. VGEN1, VGEN2 output voltage configuration

Set point	VGENx[3:0]	VGENx output (V)
0	0000	0.800
1	0001	0.850
2	0010	0.900
3	0011	0.950
4	0100	1.000
5	0101	1.050
6	0110	1.100
7	0111	1.150
8	1000	1.200
9	1001	1.250
10	1010	1.300
11	1011	1.350
12	1100	1.400
13	1101	1.450
14	1110	1.500
15	1111	1.550

Table 92. VGEN3/ 4/ 5/ 6 output voltage configuration

Set point	VGENx[3:0]	VGENx output (V)
0	0000	1.80
1	0001	1.90
2	0010	2.00
3	0011	2.10
4	0100	2.20
5	0101	2.30
6	0110	2.40
7	0111	2.50
8	1000	2.60
9	1001	2.70
10	1010	2.80
11	1011	2.90
12	1100	3.00
13	1101	3.10
14	1110	3.20
15	1111	3.30

Besides the output voltage configuration, the LDOs can be enabled or disabled at anytime during normal mode operation, as well as be programmed to stay “ON” or be disabled when the PMIC enters standby mode. Each regulator has associated I^2C bits for this. Table 93 presents a summary of all valid combinations of the control bits on VGENxCTL register and the expected behavior of the LDO output.

Table 93. LDO control

VGENxEN	VGENxLPWR	VGENxSTBY	STANDBY[61]	VGENxOUT
0	X	X	X	Off
1	0	0	X	On
1	1	0	X	Low Power
1	X	1	0	On
1	0	1	1	Off
1	1	1	1	Low Power

Notes
61. STANDBY refers to a standby event as described earlier.

For more detail information, Table 94 through Table 99 provide a description of all registers necessary to operate all six general purpose LDO regulators.

Table 94. Register VGEN1CTL - ADDR 0x6C

Name	Bit #	R/W	Default	Description
VGEN1	3:0	R/W	0x80	Sets VGEN1 output voltage. See Table 91 for all possible configurations.
VGEN1EN	4	–	0x00	Enables or disables VGEN1 output 0 = OFF 1 = ON
VGEN1STBY	5	R/W	0x00	Set VGEN1 output state when in standby. Refer to Table 93.
VGEN1LPWR	6	R/W	0x00	Enable low-power mode for VGEN1. Refer to Table 93.
UNUSED	7	–	0x00	unused

Table 95. Register VGEN2CTL - ADDR 0x6D

Name	Bit #	R/W	Default	Description
VGEN2	3:0	R/W	0x80	Sets VGEN2 output voltage. See Table 91 for all possible configurations.
VGEN2EN	4	–	0x00	Enables or disables VGEN2 output 0 = OFF 1 = ON
VGEN2STBY	5	R/W	0x00	Set VGEN2 output state when in standby. Refer to Table 93.
VGEN2LPWR	6	R/W	0x00	Enable low-power mode for VGEN2. Refer to Table 93.
UNUSED	7	–	0x00	unused

Table 96. Register VGEN3CTL - ADDR 0x6E

Name	Bit #	R/W	Default	Description
VGEN3	3:0	R/W	0x80	Sets VGEN3 output voltage. See Table 92 for all possible configurations.
VGEN3EN	4	–	0x00	Enables or disables VGEN3 output 0 = OFF 1 = ON
VGEN3STBY	5	R/W	0x00	Set VGEN3 output state when in standby. Refer to Table 93.
VGEN3LPWR	6	R/W	0x00	Enable low-power mode for VGEN3. Refer to Table 93.
UNUSED	7	–	0x00	unused

Table 97. Register VGEN4CTL - ADDR 0x6F

Name	Bit #	R/W	Default	Description
VGEN4	3:0	R/W	0x80	Sets VGEN4 output voltage. See Table 92 for all possible configurations.
VGEN4EN	4	–	0x00	Enables or disables VGEN4 output 0 = OFF 1 = ON
VGEN4STBY	5	R/W	0x00	Set VGEN4 output state when in standby. Refer to Table 93.
VGEN4LPWR	6	R/W	0x00	Enable low-power mode for VGEN4. Refer to Table 93.
UNUSED	7	–	0x00	unused

Table 98. Register VGEN5CTL - ADDR 0x70

Name	Bit #	R/W	Default	Description
VGEN5	3:0	R/W	0x80	Sets VGEN5 output voltage. See Table 92 for all possible configurations.
VGEN5EN	4	–	0x00	Enables or disables VGEN5 output 0 = OFF 1 = ON
VGEN5STBY	5	R/W	0x00	Set VGEN5 output state when in standby. Refer to Table 93.
VGEN5LPWR	6	R/W	0x00	Enable low-power mode for VGEN5. Refer to Table 93.
UNUSED	7	–	0x00	unused

Table 99. Register VGEN6CTL - ADDR 0x71

Name	Bit #	R/W	Default	Description
VGEN6	3:0	R/W	0x80	Sets VGEN6 output voltage. See Table 92 for all possible configurations.
VGEN6EN	4	–	0x00	Enables or disables VGEN6 output 0 = OFF 1 = ON
VGEN6STBY	5	R/W	0x00	Set VGEN6 output state when in standby. Refer to Table 93.
VGEN6LPWR	6	R/W	0x00	Enable low-power mode for VGEN6. Refer to Table 93.
UNUSED	7	–	0x00	unused

6.4.6.4 External components

Table 100 lists the typical component values for the general purpose LDO regulators.

Table 100. LDO external components

Regulator	Output capacitor (µF)[62]
VGEN1	2.2
VGEN2	4.7
VGEN3	2.2
VGEN4	4.7
VGEN5	2.2
VGEN6	2.2

Notes
62. Use X5R/X7R ceramic capacitors.

6.4.6.5 LDO specifications

6.4.6.5.1 VGEN1

Table 101. VGEN1 electrical characteristics

All parameters are specified at PF0100Z T_A = -40 °C to 85 °C, PF0100AZ T_A = -40 °C to 105 °C, V_{IN} = 3.6 V, V_{IN1} = 3.0 V, V_{GEN1}[3:0] = 1111, I_{GEN1} = 10 mA, typical external component values, unless otherwise noted. Typical values are characterized at V_{IN} = 3.6 V, $_{IN1}$ = 3.0 V, V_{GEN1}[3:0] = 1111, I_{GEN1} = 10 mA, and 25 °C, unless otherwise noted.

Symbol	Parameter	Min.	Typ.	Max.	Unit	Notes
VGEN1						
V_{IN1}	Operating input voltage	1.75	–	3.40	V	
$VGEN1_{NOM}$	Nominal output voltage	–	Table 91	–	V	
I_{GEN1}	Operating load current	0.0	–	100	mA	
VGEN1 DC						
$V_{GEN1TOL}$	Output voltage tolerance 1.75 V < V_{IN1} < 3.4 V 0.0 mA < I_{GEN1} < 100 mA VGEN1[3:0] = 0000 to 1111	-3.0	–	3.0	%	

Table 101. VGEN1 electrical characteristics (continued)

All parameters are specified at PF0100Z T_A = -40 °C to 85 °C, PF0100AZ T_A = -40 °C to 105 °C, V_{IN} = 3.6 V, V_{IN1} = 3.0 V, V_{GEN1}[3:0] = 1111, I_{GEN1} = 10 mA, typical external component values, unless otherwise noted. Typical values are characterized at V_{IN} = 3.6 V, $_{IN1}$ = 3.0 V, V_{GEN1}[3:0] = 1111, I_{GEN1} = 10 mA, and 25 °C, unless otherwise noted.

Symbol	Parameter	Min.	Typ.	Max.	Unit	Notes
$V_{GEN1LOR}$	Load regulation (V_{GEN1} at I_{GEN1} = 100 mA) - (V_{GEN1} at I_{GEN1} = 0.0 mA) For any 1.75 V < V_{IN1} < 3.4 V	–	0.15	–	mV/mA	
$V_{GEN1LIR}$	Line regulation (V_{GEN1} at V_{IN1} = 3.4 V) - (V_{GEN1} at V_{IN1} = 1.75 V) For any 0.0 mA < I_{GEN1} < 100 mA	–	0.30	–	mV/mA	
$I_{GEN1LIM}$	Current limit I_{GEN1} when VGEN1 is forced to $VGEN1_{NOM}$/2	122	167	200	mA	
$I_{GEN1OCP}$	Overcurrent protection threshold I_{GEN1} required to cause the SCP function to disable LDO when REGSCPEN = 1	115	–	200	mA	
I_{GEN1Q}	Quiescent current No load, Change in I_{VIN} and I_{VIN1} When VGEN1 enabled	–	14	–	µA	
VGEN1 AC and transient						
$PSRR_{VGEN1}$	PSRR • I_{GEN1} = 75 mA, 20 Hz to 20 kHz VGEN1[3:0] = 0000 - 1101 VGEN1[3:0] = 1110, 1111	 50 37	 60 45	 – –	dB	(63)
$NOISE_{VGEN1}$	Output noise density V_{IN1} = 1.75 V, I_{GEN1} = 75 mA 100 Hz – <1.0 kHz 1.0 kHz – <10 kHz 10 kHz – 1.0 MHz	 – – –	 -108 -118 -124	 -100 -108 -112	dBV/ √Hz	
$SLWR_{VGEN1}$	Turn-on slew rate • 10% to 90% of end value • 1.75 V ≤ V_{IN1} ≤ 3.4 V, I_{GEN1} = 0.0 mA VGEN1[3:0] = 0000 to 0111 VGEN1[3:0] = 1000 to 1111	 – –	 – –	 12.5 16.5	mV/µs	
$GEN1_{tON}$	Turn-on time Enable to 90% of end value, V_{IN1} = 1.75 V, 3.4 V I_{GEN1} = 0.0 mA	60	–	500	µs	
$GEN1_{tOFF}$	Turn-off time Disable to 10% of initial value, V_{IN1} = 1.75 V I_{GEN1} = 0.0 mA	–	–	10	ms	
$GEN1_{OSHT}$	Start-up overshoot V_{IN1} = 1.75 V, 3.4 V, I_{GEN1} = 0.0 mA	–	1.0	2.0	%	
$V_{GEN1LOTR}$	Transient load response • V_{IN1} = 1.75 V, 3.4 V I_{GEN1} = 10 mA to 100 mA in 1.0 µs. Peak of overshoot or undershoot of VGEN1 with respect to final value • Refer to Figure 25	–	–	3.0	%	

Table 101. VGEN1 electrical characteristics (continued)

All parameters are specified at PF0100Z T_A = -40 °C to 85 °C, PF0100AZ T_A = -40 °C to 105 °C, V_{IN} = 3.6 V, V_{IN1} = 3.0 V, V_{GEN1}[3:0] = 1111, I_{GEN1} = 10 mA, typical external component values, unless otherwise noted. Typical values are characterized at V_{IN} = 3.6 V, $_{IN1}$ = 3.0 V, V_{GEN1}[3:0] = 1111, I_{GEN1} = 10 mA, and 25 °C, unless otherwise noted.

Symbol	Parameter	Min.	Typ.	Max.	Unit	Notes
$V_{GEN1LITR}$	Transient line response • I_{GEN1} = 75 mA $VIN1_{INITIAL}$ = 1.75 V to $VIN1_{FINAL}$ = 2.25 V for VGEN1[3:0] = 0000 to 1101 $VIN1_{INITIAL}$ = V_{GEN1}+0.3 V to $VIN1_{FINAL}$ = V_{GEN1}+0.8 V for VGEN1[3:0] = 1110, 1111 • Refer to Figure 25	–	5.0	8.0	mV	

Notes

63. The PSRR of the regulators is measured with the perturbing signal at the input of the regulator. The power management IC is supplied separately from the input of the regulator and does not contain the perturbed signal. During measurements, care must be taken not to operate in the dropout region of the regulator under test.

6.4.6.5.2 VGEN2

Table 102. VGEN2 electrical characteristics

All parameters are specified at PF0100Z T_A = -40 °C to 85 °C, PF0100AZ T_A = -40 °C to 105 °C, V_{IN} = 3.6 V, V_{IN1} = 3.0 V, V_{GEN2}[3:0] = 1111, I_{GEN2} = 10 mA, typical external component values, unless otherwise noted. Typical values are characterized at V_{IN} = 3.6V, V_{IN1} = 3.0 V, VGEN2[3:0] = 1111, I_{GEN2} = 10mA and 25°C, unless otherwise noted.

Symbol	Parameter	Min.	Typ.	Max.	Unit	Notes
VGEN2						
V_{IN1}	Operating input voltage	1.75	–	3.40	V	
$VGEN2_{NOM}$	Nominal output voltage	–	Table 91	–	V	
I_{GEN2}	Operating load current	0.0	–	250	mA	
VGEN2 active mode - DC						
$V_{GEN2TOL}$	Output voltage tolerance 1.75 V < V_{IN1} < 3.4 V 0.0 mA < I_{GEN2} < 250 mA VGEN2[3:0] = 0000 to 1111	-3.0	–	3.0	%	
$V_{GEN2LOR}$	Load regulation (V_{GEN2} at I_{GEN2} = 250 mA) - (V_{GEN2} at I_{GEN2} = 0.0 mA) For any 1.75 V < V_{IN1} < 3.4 V	–	0.05	–	mV/mA	
$V_{GEN2LIR}$	Line regulation (V_{GEN2} at V_{IN1} = 3.4 V) - (V_{GEN2} at V_{IN1} = 1.75 V) For any 0.0 mA < I_{GEN2} < 250 mA	–	0.50	–	mV/mA	
$I_{GEN2LIM}$	Current limit I_{GEN2} when VGEN2 is forced to $VGEN2_{NOM}$/2 PF0100Z PF0100AZ	 333 305	 417 417	 510 510	mA	
$I_{GEN2OCP}$	Overcurrent protection threshold I_{GEN2} required to cause the SCP function to disable LDO when REGSCPEN = 1 PF0100Z PF0100AZ	 300 290	 – –	 500 500	mA	
I_{GEN2Q}	Quiescent current No load, Change in I_{VIN} and I_{VIN1} When VGEN2 enabled	–	16	–	µA	

Table 102. VGEN2 electrical characteristics (continued)

All parameters are specified at PF0100Z T_A = -40 °C to 85 °C, PF0100AZ T_A = -40 °C to 105 °C, V_{IN} = 3.6 V, V_{IN1} = 3.0 V, V_{GEN2}[3:0] = 1111, I_{GEN2} = 10 mA, typical external component values, unless otherwise noted. Typical values are characterized at V_{IN} = 3.6V, V_{IN1} = 3.0 V, VGEN2[3:0] = 1111, I_{GEN2} = 10mA and 25°C, unless otherwise noted.

Symbol	Parameter	Min.	Typ.	Max.	Unit	Notes
VGEN2 AC and transient						
$PSRR_{VGEN2}$	PSRR [64] • I_{GEN2} = 187.5 mA, 20 Hz to 20 kHz VGEN2[3:0] = 0000 - 1101 VGEN2[3:0] = 1110, 1111	 50 37	 60 45	 – –	dB	
$NOISE_{VGEN2}$	Output noise density • V_{IN1} = 1.75 V, I_{GEN2} = 187.5 mA 100 Hz – <1.0 kHz 1.0 kHz – <10 kHz 10 kHz – 1.0 MHz	 – – –	 -108 -118 -124	 -100 -108 -112	dBV/√Hz	
$SLWR_{VGEN2}$	Turn-on slew rate • 10% to 90% of end value • 1.75 V ≤ V_{IN1} ≤ 3.4 V, I_{GEN2} = 0.0 mA VGEN2[3:0] = 0000 to 0111 VGEN2[3:0] = 1000 to 1111	 – –	 – –	 12.5 16.5	mV/µs	
$GEN2_{tON}$	Turn-on time Enable to 90% of end value, V_{IN1} = 1.75 V, 3.4 V I_{GEN2} = 0.0 mA	60	–	500	µs	
$GEN2_{tOFF}$	Turn-off time Disable to 10% of initial value, V_{IN1} = 1.75 V I_{GEN2} = 0.0 mA	–	–	10	ms	
$GEN2_{OSHT}$	Start-up overshoot V_{IN1} = 1.75 V, 3.4 V, I_{GEN2} = 0.0 mA	–	1.0	2.0	%	
$V_{GEN2LOTR}$	Transient load response V_{IN1} = 1.75 V, 3.4 V I_{GEN2} = 25 mA to 250 mA in 1.0 µs Peak of overshoot or undershoot of VGEN2 with respect to final value Refer to Figure 25	–	–	3.0	%	
$V_{GEN2LITR}$	Transient line response I_{GEN2} = 187.5 mA $VIN1_{INITIAL}$ = 1.75 V to $VIN1_{FINAL}$ = 2.25 V for VGEN2[3:0] = 0000 to 1101 $VIN1_{INITIAL}$ = V_{GEN2}+0.3 V to $VIN1_{FINAL}$ = V_{GEN2}+0.8 V for VGEN2[3:0] = 1110, 1111 Refer to Figure 25	–	5.0	8.0	mV	

Notes

64. The PSRR of the regulators is measured with the perturbing signal at the input of the regulator. The power management IC is supplied separately from the input of the regulator and does not contain the perturbed signal. During measurements, care must be taken not to operate in the dropout region of the regulator under test.

6.4.6.5.3 VGEN3

Table 103. VGEN3 electrical characteristics

All parameters are specified at PF0100Z T_A = -40 °C to 85 °C, PF0100AZ T_A = -40 °C to 105 °C, V_{IN} = 3.6 V, V_{IN2} = 3.6 V, V_{GEN3}[3:0] = 1111, I_{GEN3} = 10 mA, typical external component values, unless otherwise noted. Typical values are characterized at V_{IN} = 3.6 V, V_{IN2} = 3.6 V, V_{GEN3}[3:0] = 1111, I_{GEN3} = 10 mA, and 25 °C, unless otherwise noted.

Symbol	Parameter	Min.	Typ.	Max.	Unit	Notes
VGEN3						
V_{IN2}	Operating input voltage 1.8 V ≤ $VGEN3_{NOM}$ ≤ 2.5 V 2.6 V ≤ $VGEN3_{NOM}$ ≤ 3.3 V	2.8 $VGEN3_{NOM}$+ 0.250	– –	3.6 3.6	V	(65)
$VGEN3_{NOM}$	Nominal output voltage	–	Table 92	–	V	
I_{GEN3}	Operating load current	0.0	–	100	mA	
VGEN3 DC						
$V_{GEN3TOL}$	Output voltage tolerance $VIN2_{MIN}$ < V_{IN2} < 3.6 V 0.0 mA < I_{GEN3} < 100 mA VGEN3[3:0] = 0000 to 1111	-3.0	–	3.0	%	
$V_{GEN3LOR}$	Load regulation (V_{GEN3} at I_{GEN3} = 100 mA) - (V_{GEN3} at I_{GEN3} = 0.0 mA) For any $VIN2_{MIN}$ < V_{IN2} < 3.6 V	–	0.07	–	mV/mA	
$V_{GEN3LIR}$	Line regulation (V_{GEN3} at V_{IN2} = 3.6 V) - (V_{GEN3} at $VIN2_{MIN}$) For any 0.0 mA < I_{GEN3} < 100 mA	–	0.8	–	mV/mA	
$I_{GEN3LIM}$	Current limit I_{GEN3} when VGEN3 is forced to $VGEN3_{NOM}$/2	127	167	200	mA	
$I_{GEN3OCP}$	Overcurrent protection threshold I_{GEN3} required to cause the SCP function to disable LDO when REGSCPEN = 1	120	–	200	mA	
I_{GEN3Q}	Quiescent current No load, Change in I_{VIN} and I_{VIN2} When VGEN3 enabled	–	13	–	µA	
VGEN3 AC and transient						
$PSRR_{VGEN3}$	PSRR • I_{GEN3} = 75 mA, 20 Hz to 20 kHz VGEN3[3:0] = 0000 - 1110, V_{IN2} = $VIN2_{MIN}$ + 100 mV VGEN3[3:0] = 0000 - 1000, V_{IN2} = $VGEN3_{NOM}$ + 1.0 V	35 55	40 60	– –	dB	(66)
$NOISE_{VGEN3}$	Output noise density • V_{IN2} = $VIN2_{MIN}$, I_{GEN3} = 75 mA 100 Hz – <1.0 kHz 1.0 kHz – <10 kHz 10 kHz – 1.0 MHz	– – –	-114 -129 -135	-102 -123 -130	dBV/√Hz	
$SLWR_{VGEN3}$	Turn-on slew rate • 10% to 90% of end value • $VIN2_{MIN}$ ≤ V_{IN2} ≤ 3.6 V, I_{GEN3} = 0.0 mA VGEN3[3:0] = 0000 to 0011 VGEN3[3:0] = 0100 to 0111 VGEN3[3:0] = 1000 to 1011 VGEN3[3:0] = 1100 to 1111	– – – –	– – – –	22.0 26.5 30.5 34.5	mV/µs	
$GEN3_{tON}$	Turn-on time Enable to 90% of end value, V_{IN2} = $VIN2_{MIN}$, 3.6 V I_{GEN3} = 0.0 mA	60	–	500	µs	

Table 103. VGEN3 electrical characteristics (continued)

All parameters are specified at PF0100Z T_A = -40 °C to 85 °C, PF0100AZ T_A = -40 °C to 105 °C, V_{IN} = 3.6 V, V_{IN2} = 3.6 V, V_{GEN3}[3:0] = 1111, I_{GEN3} = 10 mA, typical external component values, unless otherwise noted. Typical values are characterized at V_{IN} = 3.6 V, V_{IN2} = 3.6 V, V_{GEN3}[3:0] = 1111, I_{GEN3} = 10 mA, and 25 °C, unless otherwise noted.

Symbol	Parameter	Min.	Typ.	Max.	Unit	Notes
VGEN3 AC and transient (continued)						
$GEN3_{tOFF}$	Turn-off time Disable to 10% of initial value, V_{IN2} = $VIN2_{MIN}$ I_{GEN3} = 0.0 mA	–	–	10	ms	
$GEN3_{OSHT}$	Start-up overshoot V_{IN2} = $VIN2_{MIN}$, 3.6 V, I_{GEN3} = 0.0 mA	–	1.0	2.0	%	
$V_{GEN3LOTR}$	Transient load response V_{IN2} = $VIN2_{MIN}$, 3.6 V I_{GEN3} = 10 mA to 100 mA in 1.0 µs Peak of overshoot or undershoot of VGEN3 with respect to final value. Refer to Figure 25	–	–	3.0	%	
$V_{GEN3LITR}$	Transient line response I_{GEN3} = 75 mA $VIN2_{INITIAL}$ = 2.8 V to $VIN2_{FINAL}$ = 3.3 V for GEN3[3:0] = 0000 to 0111 $VIN2_{INITIAL}$ = V_{GEN3}+0.3 V to $VIN2_{FINAL}$ = V_{GEN3}+0.8 V for VGEN3[3:0] = 1000 to 1010 $VIN2_{INITIAL}$ = V_{GEN3}+0.25 V to $VIN2_{FINAL}$ = 3.6 V for VGEN3[3:0] = 1011 to 1111 Refer to Figure 25	–	5.0	8.0	mV	

Notes

65. When the LDO Output voltage is set above 2.6 V, the minimum allowed input voltage needs to be at least the output voltage plus 0.25 V, for proper regulation due to the dropout voltage generated through the internal LDO transistor.
66. The PSRR of the regulators is measured with the perturbing signal at the input of the regulator. The power management IC is supplied separately from the input of the regulator and does not contain the perturbed signal. During measurements, care must be taken not to operate in the dropout region of the regulator under test. $VIN2_{MIN}$ refers to the minimum allowed input voltage for a particular output voltage.

6.4.6.5.4 VGEN4

Table 104. VGEN4 electrical characteristics

All parameters are specified at PF0100Z T_A = -40 °C to 85 °C, PF0100AZ T_A = -40 °C to 105 °C, V_{IN} = 3.6 V, V_{IN2} = 3.6 V, V_{GEN4}[3:0] = 1111, I_{GEN4} = 10 mA, typical external component values, unless otherwise noted. Typical values are characterized at V_{IN} = 3.6 V, V_{IN2} = 3.6 V, V_{GEN4}[3:0] = 1111, I_{GEN4} = 10 mA, and 25 °C, unless otherwise noted.

Symbol	Parameter	Min	Typ	Max	Unit	Notes
VGEN4						
V_{IN2}	Operating input voltage 1.8 V ≤ $VGEN4_{NOM}$ ≤ 2.5 V 2.6 V ≤ $VGEN4_{NOM}$ ≤ 3.3 V	2.8 $VGEN4_{NOM}$+ 0.250	– –	3.6 3.6	V	(67)
$VGEN4_{NOM}$	Nominal output voltage	–	Table 92	–	V	
I_{GEN4}	Operating load current	0.0	–	350	mA	
VGEN4 DC						
$V_{GEN4TOL}$	Output voltage tolerance $VIN2_{MIN}$ < V_{IN2} < 3.6 V 0.0 mA < I_{GEN4} < 350 mA VGEN4[3:0] = 0000 to 1111	-3.0	–	3.0	%	
$V_{GEN4LOR}$	Load regulation (V_{GEN4} at I_{GEN4} = 350 mA) - (V_{GEN4} at I_{GEN4} = 0.0 mA) For any $VIN2_{MIN}$ < V_{IN2} < 3.6 V	–	0.07	–	mV/mA	

Table 104. VGEN4 electrical characteristics (continued)

All parameters are specified at PF0100Z T_A = -40 °C to 85 °C, PF0100AZ T_A = -40 °C to 105 °C, V_{IN} = 3.6 V, V_{IN2} = 3.6 V, V_{GEN4}[3:0] = 1111, I_{GEN4} = 10 mA, typical external component values, unless otherwise noted. Typical values are characterized at V_{IN} = 3.6 V, V_{IN2} = 3.6 V, V_{GEN4}[3:0] = 1111, I_{GEN4} = 10 mA, and 25 °C, unless otherwise noted.

Symbol	Parameter	Min	Typ	Max	Unit	Notes
VGEN4 DC (continued)						
$V_{GEN4LIR}$	Line regulation (V_{GEN4} at 3.6 V) - (V_{GEN4} at $VIN2_{MIN}$) For any 0.0 mA < I_{GEN4} < 350 mA	–	0.80	–	mV/mA	
$I_{GEN4LIM}$	Current limit I_{GEN4} when VGEN4 is forced to $VGEN4_{NOM}$/2	435	584.5	700	mA	
$I_{GEN4OCP}$	Overcurrent protection threshold I_{GEN4} required to cause the SCP function to disable LDO when REGSCPEN = 1	420	–	700	mA	
I_{GEN4Q}	Quiescent current No load, change in I_{VIN} and I_{VIN2} When VGEN4 enabled	–	13	–	µA	
VGEN4 AC and transient						
$PSRR_{VGEN4}$	PSRR • I_{GEN4} = 262.5 mA, 20 Hz to 20 kHz VGEN4[3:0] = 0000 - 1110, V_{IN2} = $VIN2_{MIN}$ + 100 mV VGEN4[3:0] = 0000 - 1000, V_{IN2} = $VGEN4_{NOM}$ + 1.0 V	 35 55	 40 60	 – –	dB	(68)
$NOISE_{VGEN4}$	Output noise density • V_{IN2} = $VIN2_{MIN}$, I_{GEN4} = 262.5 mA 100 Hz – <1.0 kHz 1.0 kHz – <10 kHz 10 kHz – 1.0 MHz	 – – –	 -114 -129 -135	 -102 -123 -130	dBV/√Hz	
$SLWR_{VGEN4}$	Turn-on slew rate • 10% to 90% of end value • $VIN2_{MIN} \leq V_{IN2} \leq 3.6$ V, I_{GEN4} = 0.0 mA VGEN4[3:0] = 0000 to 0011 VGEN4[3:0] = 0100 to 0111 VGEN4[3:0] = 1000 to 1011 VGEN4[3:0] = 1100 to 1111	 – – – –	 – – – –	 22.0 26.5 30.5 34.5	mV/µs	
$GEN4_{tON}$	Turn-on time Enable to 90% of end value, V_{IN2} = $VIN2_{MIN}$, 3.6 V I_{GEN4} = 0.0 mA	60	–	500	µs	
$GEN4_{tOFF}$	Turn-off time Disable to 10% of initial value, V_{IN2} = $VIN2_{MIN}$ I_{GEN4} = 0.0 mA	–	–	10	ms	
$GEN4_{OSHT}$	Start-up overshoot V_{IN2} = $VIN2_{MIN}$, 3.6 V, I_{GEN4} = 0.0 mA	–	1.0	2.0	%	
$V_{GEN4LOTR}$	Transient load response V_{IN2} = $VIN2_{MIN}$, 3.6 V I_{GEN4} = 35 mA to 350 mA in 1.0 µs Peak of overshoot or undershoot of VGEN4 with respect to final value. Refer to Figure 25	–	–	3.0	%	

Table 104. VGEN4 electrical characteristics (continued)

All parameters are specified at PF0100Z T_A = -40 °C to 85 °C, PF0100AZ T_A = -40 °C to 105 °C, V_{IN} = 3.6 V, V_{IN2} = 3.6 V, V_{GEN4}[3:0] = 1111, I_{GEN4} = 10 mA, typical external component values, unless otherwise noted. Typical values are characterized at V_{IN} = 3.6 V, V_{IN2} = 3.6 V, V_{GEN4}[3:0] = 1111, I_{GEN4} = 10 mA, and 25 °C, unless otherwise noted.

Symbol	Parameter	Min	Typ	Max	Unit	Notes
VGEN4 AC and transient (continued)						
$V_{GEN4LITR}$	Transient line response I_{GEN4} = 262.5 mA $VIN2_{INITIAL}$ = 2.8 V to $VIN2_{FINAL}$ = 3.3 V for VGEN4[3:0] = 0000 to 0111 $VIN2_{INITIAL}$ = V_{GEN4}+0.3 V to $VIN2_{FINAL}$ = V_{GEN4}+0.8 V for VGEN4[3:0] = 1000 to 1010 $VIN2_{INITIAL}$ = V_{GEN4}+0.25 V to $VIN2_{FINAL}$ = 3.6 V for VGEN4[3:0] = 1011 to 1111 Refer to Figure 25	–	5.0	8.0	mV	

Notes

67. When the LDO output voltage is set above 2.6 V, the minimum allowed input voltage need to be at least the output voltage plus 0.25 V for proper regulation due to the dropout voltage generated through the internal LDO transistor.
68. The PSRR of the regulators is measured with the perturbing signal at the input of the regulator. The power management IC is supplied separately from the input of the regulator and does not contain the perturbed signal. During measurements, care must be taken not to operate in the dropout region of the regulator under test. $VIN2_{MIN}$ refers to the minimum allowed input voltage for a particular output voltage.

6.4.6.5.5 VGEN5

Table 105. VGEN5 electrical characteristics

All parameters are specified at PF0100Z T_A = -40 °C to 85 °C, PF0100AZ T_A = -40 °C to 105 °C, V_{IN} = 3.6 V, V_{IN3} = 3.6 V, V_{GEN5}[3:0] = 1111, I_{GEN5} = 10 mA, typical external component values, unless otherwise noted. Typical values are characterized at V_{IN} = 3.6 V, VIN3 = 3.6 V, V_{GEN5}[3:0] = 1111, I_{GEN5} = 10 mA, and 25 °C, unless otherwise noted.

Symbol	Parameter	Min	Typ	Max	Unit	Notes
VGEN5						
V_{IN3}	Operating input voltage 1.8 V ≤ $VGEN5_{NOM}$ ≤ 2.5 V 2.6 V ≤ $VGEN5_{NOM}$ ≤ 3.3 V	2.8 $VGEN5_{NOM}$+ 0.250	– –	4.5 4.5	V	(69)
$VGEN5_{NOM}$	Nominal output voltage	–	Table 92	–	V	
I_{GEN5}	Operating load current	0.0	–	100	mA	
VGEN5 active mode – DC						
$V_{GEN5TOL}$	Output voltage tolerance $VIN3_{MIN}$ < V_{IN3} < 4.5 V 0.0 mA < I_{GEN5} < 100 mA VGEN5[3:0] = 0000 to 1111	-3.0	–	3.0	%	
$V_{GEN5LOR}$	Load regulation (V_{GEN5} at I_{GEN5} = 100 mA) - (V_{GEN5} at I_{GEN5} = 0.0 mA) For any $VIN3_{MIN}$ < V_{IN3} < 4.5 mV	–	0.10	–	mV/mA	
$V_{GEN5LIR}$	Line regulation (V_{GEN5} at V_{IN3} = 4.5 V) - (V_{GEN5} at $VIN3_{MIN}$) For any 0.0 mA < I_{GEN5} < 100 mA	–	0.50	–	mV/mA	
$I_{GEN5LIM}$	Current limit I_{GEN5} when VGEN5 is forced to $VGEN5_{NOM}$/2	122	167	200	mA	
$I_{GEN5OCP}$	Overcurrent protection threshold I_{GEN5} required to cause the SCP function to disable LDO when REGSCPEN = 1	120	–	200	mA	

Table 105. VGEN5 electrical characteristics (continued)

All parameters are specified at PF0100Z T_A = -40 °C to 85 °C, PF0100AZ T_A = -40 °C to 105 °C, V_{IN} = 3.6 V, V_{IN3} = 3.6 V, V_{GEN5}[3:0] = 1111, I_{GEN5} = 10 mA, typical external component values, unless otherwise noted. Typical values are characterized at V_{IN} = 3.6 V, VIN3 = 3.6 V, V_{GEN5}[3:0] = 1111, I_{GEN5} = 10 mA, and 25 °C, unless otherwise noted.

Symbol	Parameter	Min	Typ	Max	Unit	Notes
VGEN5 active mode – DC (continued)						
I_{GEN5Q}	Quiescent current No load, change in I_{VIN} and I_{VIN3} When VGEN5 enabled	–	13	–	µA	
VGEN5 AC and transient						
$PSRR_{VGEN5}$	PSRR • I_{GEN5} = 75 mA, 20 Hz to 20 kHz VGEN5[3:0] = 0000 - 1111, V_{IN3} = $VIN3_{MIN}$ + 100 mV VGEN5[3:0] = 0000 - 1111, V_{IN3} = $VGEN5_{NOM}$ + 1.0 V	 35 52	 40 60	 – –	dB	(70)
$NOISE_{VGEN5}$	Output noise density • V_{IN3} = $VIN3_{MIN}$, I_{GEN5} = 75 mA 100 Hz – <1.0 kHz 1.0 kHz – <10 kHz 10 kHz – 1.0 MHz	 – – –	 -114 -129 -135	 -102 -123 -130	dBV/√Hz	
$SLWR_{VGEN5}$	Turn-on slew rate • 10% to 90% of end value • $VIN3_{MIN} \leq V_{IN3} \leq 4.5$ mV, I_{GEN5} = 0.0 mA VGEN5[3:0] = 0000 to 0011 VGEN5[3:0] = 0100 to 0111 VGEN5[3:0] = 1000 to 1011 VGEN5[3:0] = 1100 to 1111	 – – – –	 – – – –	 22.0 26.5 30.5 34.5	mV/µs	
$GEN5_{tON}$	Turn-on time Enable to 90% of end value, V_{IN3} = $VIN3_{MIN}$, 4.5 V I_{GEN5} = 0.0 mA	60	–	500	µs	
$GEN5_{tOFF}$	Turn-off time Disable to 10% of initial value, V_{IN3} = $VIN3_{MIN}$ I_{GEN5} = 0.0 mA	–	–	10	ms	
$GEN5_{OSHT}$	Start-up overshoot V_{IN3} = $VIN3_{MIN}$, 4.5 V, I_{GEN5} = 0.0 mA	–	1.0	2.0	%	
$V_{GEN5LOTR}$	Transient load response V_{IN3} = $VIN3_{MIN}$, 4.5 V I_{GEN5} = 10 to 100 mA in 1.0 µs Peak of overshoot or undershoot of VGEN5 with respect to final value. Refer to Figure 25	–	–	3.0	%	
$V_{GEN5LITR}$	Transient line response I_{GEN5} = 75 mA $VIN3_{INITIAL}$ = 2.8 V to $VIN3_{FINAL}$ = 3.3 V for VGEN5[3:0] = 0000 to 0111 $VIN3_{INITIAL}$ = V_{GEN5}+0.3 V to $VIN3_{FINAL}$ = V_{GEN5}+0.8 V for VGEN5[3:0] = 1000 to 1111 Refer to Figure 25	-	5.0	8.0	mV	

Notes

69. When the LDO output voltage is set above 2.6 V, the minimum allowed input voltage need to be at least the output voltage plus 0.25 V for proper regulation due to the dropout voltage generated through the internal LDO transistor.
70. The PSRR of the regulators is measured with the perturbing signal at the input of the regulator. The power management IC is supplied separately from the input of the regulator and does not contain the perturbed signal. During measurements, care must be taken not to operate in the dropout region of the regulator under test. $VIN3_{MIN}$ refers to the minimum allowed input voltage for a particular output voltage.

6.4.6.5.6 VGEN6

Table 106. VGEN6 electrical characteristics

All parameters are specified at PF0100Z T_A = -40 °C to 85 °C, PF0100AZ T_A = -40 °C to 105 °C, V_{IN} = 3.6 V, V_{IN3} = 3.6 V, V_{GEN6}[3:0] = 1111, I_{GEN6} = 10 mA, typical external component values, unless otherwise noted. Typical values are characterized at V_{IN} = 3.6 V, V_{IN3} = 3.6 V, V_{GEN6}[3:0] = 1111, I_{GEN6} = 10 mA, and 25 °C, unless otherwise noted.

Symbol	Parameter	Min	Typ	Max	Unit	Notes
VGEN6						
V_{IN3}	Operating input voltage 1.8 V ≤ $VGEN6_{NOM}$ ≤ 2.5 V 2.6 V ≤ $VGEN6_{NOM}$ ≤ 3.3 V	2.8 $VGEN6_{NOM}$+ 0.250	– –	4.5 4.5	V	(71)
$VGEN6_{NOM}$	Nominal output voltage	–	Table 92	–	V	
I_{GEN6}	Operating load current	0.0	–	200	mA	
VGEN6 DC						
$V_{GEN6TOL}$	Output voltage tolerance $VIN3_{MIN}$ < V_{IN3} < 4.5 V 0.0 mA < I_{GEN6} < 200 mA VGEN6[3:0] = 0000 to 1111	-3.0	–	3.0	%	
$V_{GEN6LOR}$	Load regulation (V_{GEN6} at I_{GEN6} = 200 mA) - (V_{GEN6} at I_{GEN6} = 0.0 mA) For any $VIN3_{MIN}$ < V_{IN3} < 4.5 V	–	0.10	–	mV/mA	
$V_{GEN6LIR}$	Line regulation (V_{GEN6} at V_{IN3} = 4.5 V) - (V_{GEN6} at $VIN3_{MIN}$) For any 0.0 mA < I_{GEN6} < 200 mA	–	0.50	–	mV/mA	
$I_{GEN6LIM}$	Current limit I_{GEN6} when VGEN6 is forced to $VGEN6_{NOM}$/2 PF0100Z PF0100AZ	 232 232	 333 333	 400 475	mA	
$I_{GEN6OCP}$	Overcurrent protection threshold I_{GEN6} required to cause the SCP function to disable LDO when REGSCPEN = 1 PF0100Z PF0100AZ	 220 220	 – –	 400 475	mA	
I_{GEN6Q}	Quiescent current No load, change in I_{VIN} and I_{VIN3} When VGEN6 enabled	–	13	–	µA	
VGEN6 AC and transient						
$PSRR_{VGEN6}$	PSRR • I_{GEN6} = 150 mA, 20 Hz to 20 kHz VGEN6[3:0] = 0000 - 1111, V_{IN3} = $VIN3_{MIN}$ + 100 mV VGEN6[3:0] = 0000 - 1111, V_{IN3} = $VGEN6_{NOM}$ + 1.0 V	 35 52	 40 60	 – –	dB	(72)
$NOISE_{VGEN6}$	Output noise density • V_{IN3} = $VIN3_{MIN}$, I_{GEN6} = 150 mA 100 Hz – <1.0 kHz 1.0 kHz – <10 kHz 10 kHz – 1.0 MHz	 – – –	 -114 -129 -135	 -102 -123 -130	dBV/√Hz	
$SLWR_{VGEN6}$	Turn-on slew rate • 10% to 90% of end value • $VIN3_{MIN}$ ≤ V_{IN3} ≤ 4.5 V, I_{GEN6} = 0.0 mA VGEN6[3:0] = 0000 to 0011 VGEN6[3:0] = 0100 to 0111 VGEN6[3:0] = 1000 to 1011 VGEN6[3:0] = 1100 to 1111	 – – – –	 – – – –	 22.0 26.5 30.5 34.5	mV/µs	

Table 106. VGEN6 electrical characteristics (continued)

All parameters are specified at PF0100Z T_A = -40 °C to 85 °C, PF0100AZ T_A = -40 °C to 105 °C, V_{IN} = 3.6 V, V_{IN3} = 3.6 V, V_{GEN6}[3:0] = 1111, I_{GEN6} = 10 mA, typical external component values, unless otherwise noted. Typical values are characterized at V_{IN} = 3.6 V, V_{IN3} = 3.6 V, V_{GEN6}[3:0] = 1111, I_{GEN6} = 10 mA, and 25 °C, unless otherwise noted.

Symbol	Parameter	Min	Typ	Max	Unit	Notes
VGEN6 AC and transient (continued)						
$GEN6_{tON}$	Turn-on time Enable to 90% of end value, V_{IN3} = $VIN3_{MIN}$, 4.5 V I_{GEN6} = 0.0 mA	60	–	500	µs	
$GEN6_{tOFF}$	Turn-off time Disable to 10% of initial value, V_{IN3} = $VIN3_{MIN}$ I_{GEN6} = 0.0 mA	–	–	10	ms	
$GEN6_{OSHT}$	Start-up overshoot V_{IN3} = $VIN3_{MIN}$, 4.5 V, I_{GEN6} = 0 mA	–	1.0	2.0	%	
$V_{GEN6LOTR}$	Transient load response V_{IN3} = $VIN3_{MIN}$, 4.5 V I_{GEN6} = 20 to 200 mA in 1.0 µs Peak of overshoot or undershoot of VGEN6 with respect to final value. Refer to Figure 25	–	–	3.0	%	
$V_{GEN6LITR}$	Transient line response I_{GEN6} = 150 mA $VIN3_{INITIAL}$ = 2.8 V to $VIN3_{FINAL}$ = 3.3 V for VGEN6[3:0] = 0000 to 0111 $VIN3_{INITIAL}$ = V_{GEN6}+0.3 V to $VIN3_{FINAL}$ = V_{GEN6}+0.8 V for VGEN6[3:0] = 1000 to 1111 Refer to Figure 25	–	5.0	8.0	mV	

Notes

71. When the LDO output voltage is set above 2.6 V, the minimum allowed input voltage needs to be at least the output voltage plus 0.25 V for proper regulation due to the dropout voltage generated through the internal LDO transistor.
72. The PSRR of the regulators is measured with the perturbing signal at the input of the regulator. The power management IC is supplied separately from the input of the regulator and does not contain the perturbed signal. During measurements, care must be taken not to operate in the dropout region of the regulator under test. $VIN3_{MIN}$ refers to the minimum allowed input voltage for a particular output voltage.

6.4.7 VSNVS LDO/switch

VSNVS powers the low-power, SNVS/RTC domain on the processor. It derives its power from either V_{IN}, or coin cell, and cannot be disabled. When powered by both, V_{IN} takes precedence when above the appropriate comparator threshold. When powered by V_{IN}, VSNVS is an LDO capable of supplying seven voltages: 3.0, 1.8, 1.5, 1.3, 1.2, 1.1, and 1.0 V. The bits VSNVSVOLT[2:0] in register VSNVS_CONTROL determine the output voltage. When powered by coin cell, VSNVS is an LDO capable of supplying 1.8, 1.5, 1.3, 1.2, 1.1, or 1.0 V as shown in Table 107. If the 3.0 V option is chosen with the coin cell, VSNVS tracks the coin cell voltage by means of a switch, whose maximum resistance is 100 Ω. In this case, the VSNVS voltage is simply the coin cell voltage minus the voltage drop across the switch, which is 40 mV at a rated maximum load current of 400 µA.

The default setting of the VSNVSVOLT[2:0] is 110, or 3.0 V, unless programmed otherwise in OTP. However, when the coin cell is applied for the very first time, VSNVS outputs 1.0 V. Only when V_{IN} is applied thereafter, VSNVS transitions to its default, or the programmed value if different. Upon subsequent removal of V_{IN}, with the coin cell attached, VSNVS changes configuration from an LDO to a switch for the “110” setting, and remains as an LDO for the other settings, continuing to output the same voltages as when V_{IN} is applied, providing certain conditions are met as described in Table 107.

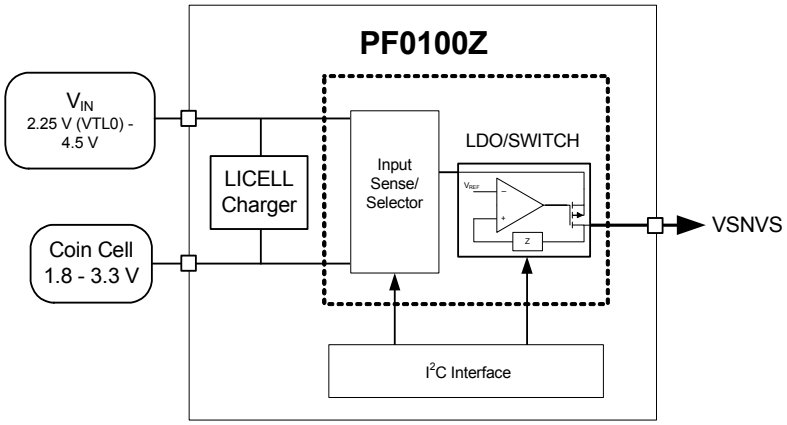

Figure 26. VSNVS supply switch architecture

Table 107 provides a summary of the VSNVS operation at a different V_{IN} input voltage and with or without coin cell connected to the system.

Table 107. VSNVS modes of operation

VSNVSVOLT[2:0]	VIN	Mode
110	> VTH1	VIN LDO 3.0 V
110	< VTL1	Coin cell switch
000 – 101	> VTH0	VIN LDO
000 – 101	< VTL0	Coin cell LDO

6.4.7.0.1 VSNVS control

The VSNVS output level is configured through the VSNVSVOLT[2:0]bits on VSNVSCTL register as shown in table Table 108.

Table 108. Register VSNVSCTL - ADDR 0x6B

Name	Bit #	R/W	Default	Description
VSNVSVOLT	2:0	R/W	0x80	Configures VSNVS output voltage.[73] 000 = 1.0 V 001 = 1.1 V 010 = 1.2 V 011 = 1.3 V 100 = 1.5 V 101 = 1.8 V 110 = 3.0 V 111 = RSVD
UNUSED	7:3	–	0x00	unused

Notes
73. Only valid when a valid input voltage is present.

6.4.7.0.2 VSNVS external components

Table 109. VSNVS external components

Capacitor	Value (µF)
VSNVS	0.47

6.4.7.0.3 VSNVS specifications

Table 110. VSNVS electrical characteristics

All parameters are specified at PF0100Z T_A = -40 °C to 85 °C, PF0100AZ T_A = -40 °C to 105 °C, V_{IN} = 3.6 V, V_{SNVS} = 3.0 V, I_{SNVS} = 5.0 µA, typical external component values, unless otherwise noted. Typical values are characterized at V_{IN} = 3.6 V, V_{SNVS} = 3.0 V, I_{SNVS} = 5.0 µA, and 25 °C, unless otherwise noted.

Symbol	Parameter	Min	Typ	Max	Unit	Notes
VSNVS						
VIN_{SNVS}	Operating input voltage Valid coin cell range Valid V_{IN}	 1.8 2.25	 – –	 3.3 4.5	V	
I_{SNVS}	Operating load current $V_{INMIN} < V_{IN} < V_{INMAX}$	5.0	–	400	µA	
VSNVS DC, LDO						
V_{SNVS}	Output voltage • 5.0 µA < I_{SNVS} < 400 µA (off) 3.20 V < V_{IN} < 4.5 V, VSNVSVOLT[2:0] = 110 VTL0/VTH < V_{IN} < 4.5 V, VSNVSVOLT[2:0] = [000] - [101] • 5.0µA < I_{SNVS} < 400 µA (on) 3.20 V < V_{IN} < 4.5 V, VSNVSVOLT[2:0] = 110 UVDET < V_{IN} < 4.5 V, VSNVSVOLT[2:0] = [000] - [101] • 5.0 µA < I_{SNVS} < 400 µA (coin cell mode) 2.84 V < V_{COIN} < 3.3 V, VSNVSVOLT[2:0] = 110 1.8 V < V_{COIN} < 3.3 V, VSNVSVOLT[2:0] = [000] - [101]	 -5.0% -8.0% -5.0% -4.0% V_{COIN}-0.04 -8.0%	 3.0 1.0 - 1.8 3.0 1.0 - 1.8 – 1.0 - 1.8	 7.0% 7.0% 5.0% 4.0% V_{COIN} 7.0%	V	(77)
$VSNVS_{DROP}$	Dropout voltage 2.85 V < V_{IN} < 2.9 V, VSNVSVOLT[2:0] = 110 5.0 µA < I_{SNVS} < 400 µA	–	–	50	mV	
$ISNVS_{LIM}$	Current limit PF0100Z $V_{IN} > V_{TH1}$, VSNVSVOLT[2:0] = 110 $V_{IN} > V_{TL0}$, VSNVSVOLT[2:0] = 000 to 101 $V_{IN} < V_{TL0}$, VSNVSVOLT[2:0] = 000 to 101 PF0100AZ $V_{IN} > V_{TH1}$, VSNVSVOLT[2:0] = 110 $V_{IN} > V_{TL0}$, VSNVSVOLT[2:0] = 000 to 101 $V_{IN} < V_{TL0}$, VSNVSVOLT[2:0] = 000 to 101	 750 500 480 1100 500 480	 – – – – – –	 5900 5900 3600 6750 6750 4500	µA	
V_{TH0}	V_{IN} threshold (coin cell powered to V_{IN} powered) V_{IN} going high with valid coin cell VSNVSVOLT[2:0] = 000, 001, 010, 011, 100, 101	2.25	2.40	2.55	V	
V_{TL0}	V_{IN} threshold (V_{IN} powered to coin cell powered) V_{IN} going low with valid coin cell VSNVSVOLT[2:0] = 000, 001, 010, 011, 100, 101	2.20	2.35	2.50	V	
V_{HYST1}	V_{IN} threshold hysteresis for V_{TH1}-V_{TL1}	5.0	–	–	mV	
V_{HYST0}	V_{IN} threshold hysteresis for V_{TH0}-V_{TL0}	5.0	–	–	mV	
$VSNVS_{CROSS}$	Output voltage during crossover VSNVSVOLT[2:0] = 110 V_{COIN} > 2.9 V Switch to LDO: V_{IN} > 2.825 V, I_{SNVS} = 100 µA LDO to Switch: V_{IN} < 3.05 V, I_{SNVS} = 100 µA	2.7	–	–	V	(74)

Table 110. VSNVS electrical characteristics (continued)

All parameters are specified at PF0100Z T_A = -40 °C to 85 °C, PF0100AZ T_A = -40 °C to 105 °C, V_{IN} = 3.6 V, V_{SNVS} = 3.0 V, I_{SNVS} = 5.0 µA, typical external component values, unless otherwise noted. Typical values are characterized at V_{IN} = 3.6 V, V_{SNVS} = 3.0 V, I_{SNVS} = 5.0 µA, and 25 °C, unless otherwise noted.

Symbol	Parameter	Min	Typ	Max	Unit	Notes
VSNVS AC and transient						
tON_{SNVS}	Turn-on time (load capacitor, 0.47 µF) V_{IN} = UVDET to 90% of V_{SNVS} V_{COIN} = 0.0 V, I_{SNVS} = 5.0 µA VSNVSVOLT[2:0] = 000 to 110	–	–	24	ms	(75), (76)
$V_{SNVSOSH}$	Start-up overshoot VSNVSVOLT[2:0] = 000 to 110 I_{SNVS} = 5.0 µA dV_{IN}/dt = 50 mV/µs	–	40	70	mV	
$V_{SNVSLITR}$	Transient line response I_{SNVS} = 75% of $ISNVS_{MAX}$ 3.2 V < V_{IN} < 4.5 V, VSNVSVOLT[2:0] = 110 2.45 V < V_{IN} < 4.5 V, VSNVSVOLT[2:0] = [000] - [101]	– –	32 22	– –	mV	
$V_{SNVSLOTR}$	Transient load response VSNVSVOLT[2:0] = 110 3.1 V (UVDETL)< $V_{IN} \leq$ 4.5 V I_{SNVS} = 75 to 750 µA	2.8	–	–	V	
	VSNVSVOLT[2:0] = 000 to 101 2.45 V < $V_{IN} \leq$ 4.5 V VTL0 > V_{IN}, 1.8 V ≤ V_{COIN} ≤ 3.3 V I_{SNVS} = 40 µA to 400 µA Refer to Figure 25	–	1.0	2.0	%	
VSNVS DC, switch						
V_{INSNVS}	Operating input voltage Valid coin cell range	1.8	–	3.3	V	
I_{SNVS}	Operating load current	5.0	–	400	µA	
$R_{DSONSNVS}$	Internal switch $R_{DS(on)}$ V_{COIN} = 2.6 V	–	–	100	W	
VTL1	V_{IN} threshold (V_{IN} powered to coin cell powered) VSNVSVOLT[2:0] = 110	2.725	2.90	3.00	V	(74)
VTH1	V_{IN} threshold (coin cell powered to V_{IN} powered) VSNVSVOLT[2:0] = 110	2.775	2.95	3.1	V	

Notes

74. During crossover from VIN to LICELL, the VSNVS output voltage may drop to 2.7 V before going to the LICELL voltage. Though this is outside the specified DC voltage level for the VDD_SNVS_IN pin of the i.MX 6, this momentary drop does not cause a malfunction. The i.MX 6's RTC continues to operate through the transition, and as a worst case may switch to the internal RC oscillator for a few clock cycles before switching back to the external crystal oscillator.
75. The start-up of VSNVS is not monotonic. It first rises to 1.0 V and then settles to its programmed value within the specified tr_1 time.
76. From coin cell insertion to VSNVS = 1.0 V, the delay time is typically 400 ms.
77. For 1.8 V I_{SNVS} limited to 100 µA for V_{COIN} < 2.1 V

6.4.7.1 Coin cell battery backup

The LICELL pin provides for a connection of a coin cell backup battery or a "super" capacitor. If the voltage at VIN goes below the V_{IN} threshold (V_{TL1} and V_{TL0}), contact-bounced, or removed, the coin cell maintained logic is powered by the voltage applied to LICELL. The supply for internal logic and the VSNVS rail switch over to the LICELL pin when V_{IN} goes below VTL1 or VTL0, even in the absence of a voltage at the LICELL pin, resulting in clearing of memory and turning off VSNVS. Applications concerned about this behavior can tie the LICELL pin to any system voltage between 1.8 V and 3.0 V. A small capacitor should be placed from LICELL to ground under all circumstances.

6.4.7.1.1 Coin cell charger control

The coin cell charger circuit functions as a current-limited voltage source, resulting in the CC/CV taper characteristic typically used for rechargeable Lithium-Ion batteries. The coin cell charger is enabled via the COINCHEN bit, while the coin cell voltage is programmable through the VCOIN[2:0] bits on register COINCTL in Table 112. The coin cell charger voltage is programmable. In the on state, the charger current is fixed at ICOINHI. In sleep and standby modes, the charger current is reduced to a typical 10 µA. In the off state, coin cell charging is not available as the main battery could be depleted unnecessarily. The coin cell charging is stopped when V_{IN} is below UVDET.

Table 111. Coin cell charger voltage

VCOIN[2:0]	V_{COIN} (V)[78]
000	2.50
001	2.70
010	2.80
011	2.90
100	3.00
101	3.10
110	3.20
111	3.30

Notes
78. Coin cell voltages selected based on the type of LICELL used on the system.

Table 112. Register COINCTL - ADDR 0x1A

Name	Bit #	R/W	Default	Description
VCOIN	2:0	R/W	0x00	Coin cell charger output voltage selection. See Table 111 for all options selectable through these bits.
COINCHEN	3	R/W	0x00	Enable or disable the coin cell charger
UNUSED	7:4	–	0x00	unused

6.4.7.1.2 External components

Table 113. Coin cell charger external components

Component	Value	Units
LICELL bypass capacitor	100	nF

6.4.7.1.3 Coin cell specifications

Table 114. Coin cell charger specifications

Parameter	Typ	Unit
Voltage accuracy	100	mV
Coin cell charge current in on mode ICOINHI	60	µA
Current accuracy	30	%

6.5 Control interface I²C block description

The PF0100Z contains an I²C interface port which allows access by a processor, or any I²C master, to the register set. Via these registers the resources of the IC can be controlled. The registers also provide status information about how the IC is operating. The SCL and SDA lines should be routed away from noisy signals and planes to minimize noise pick up. To prevent reflections in the SCL and SDA traces from creating false pulses, the rise and fall times of the SCL and SDA signals must be greater than 20 ns. This can be accomplished by reducing the drive strength of the I²C master, via software. The i.MX6 I2C driver defaults to a 40 Ω drive strength. It is recommended to use a drive strength of 80 Ω or higher to increase the edge times. Alternatively, this can be accomplished by using small capacitors from SCL and SDA to ground. For example, use 5.1 pF capacitors from SCL and SDA to ground for bus pull-up resistors of 4.8 kΩ.

6.5.1 I²C device ID

I²C interface protocol requires a device ID for addressing the target IC on a multi-device bus. To allow flexibility in addressing for bus conflict avoidance, fuse programmability is provided to allow configuration for the lower 3 address LSB(s). Refer to 6.1.2 One time programmability (OTP), page 20 for more details. This product supports 7-bit addressing only; support is not provided for 10-bit or general call addressing. Note, when the TBB bits for the I²C slave address are written, the next access to the chip, must then use the new slave address; these bits take affect right away.

6.5.2 I²C operation

The I²C mode of the interface is implemented generally following the fast mode definition which supports up to 400 kbits/s operation (exceptions to the standard are noted to be 7-bit only addressing and no support for General Call addressing.) Timing diagrams, electrical specifications, and further details can be found in the I²C specification, which is available for download at:

http://www.nxp.com/acrobat_download/literature/9398/39340011.pdf

I²C read operations are also performed in byte increments separated by an ACK. Read operations also begin with the MSB and each byte will be sent out unless a STOP command or NACK is received prior to completion.

The following examples show how to write and read data to and from the IC. The host initiates and terminates all communication. The host sends a master command packet after driving the start condition. The device responds to the host if the master command packet contains the corresponding slave address. In the following examples, the device is shown always responding with an ACK to transmissions from the host. If at any time a NACK is received, the host should terminate the current transaction and retry the transaction.

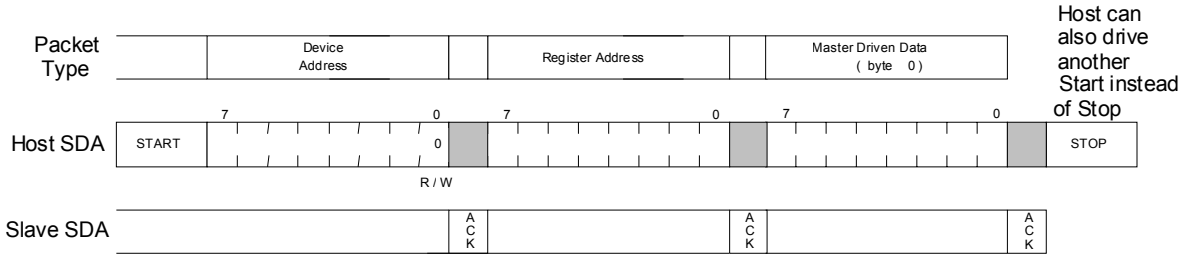

Figure 27. I²C write example

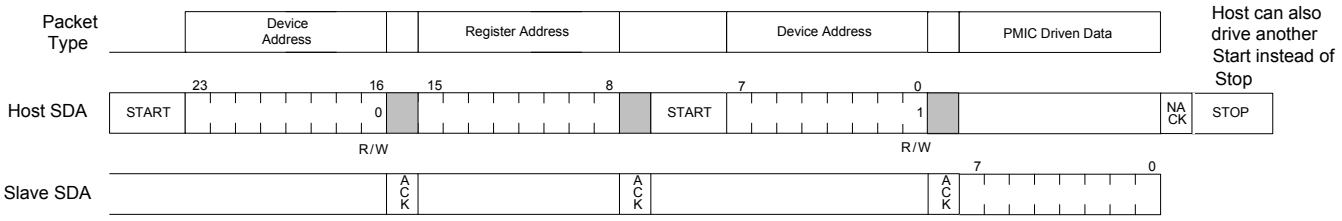

Figure 28. I²C read example

6.5.3 Interrupt handling

The system is informed about important events based on interrupts. Unmasked interrupt events are signaled to the processor by driving the INTB pin low.

Each interrupt is latched so even if the interrupt source becomes inactive, the interrupt remains set until cleared. Each interrupt can be cleared by writing a “1” to the appropriate bit in the interrupt status register; this also causes the INTB pin to go high. If there are multiple interrupt bits set the INTB pin remains low until all are either masked or cleared. If a new interrupt occurs while the processor clears an existing interrupt bit, the INTB pin remains low.

Each interrupt can be masked by setting the corresponding mask bit to a 1. As a result, when a masked interrupt bit goes high, the INTB pin does not go low. A masked interrupt can still be read from the interrupt status register. This gives the processor the option of polling for status from the IC. The IC powers up with all interrupts masked, so the processor must initially poll the device to determine if any interrupts are active. Alternatively, the processor can unmask the interrupt bits of interest. If a masked interrupt bit was already high, the INTB pin goes low after unmasking.

The sense registers contain status and input sense bits so the system processor can poll the current state of interrupt sources. They are read only, and not latched or clearable.

Interrupts generated by external events are debounced; therefore, the event needs to be stable throughout the debounce period before an interrupt is generated. Nominal debounce periods for each event are documented in the INT summary Table 115. Due to the asynchronous nature of the debounce timer, the effective debounce time can vary slightly.

6.5.4 Interrupt bit summary

Table 115 summarizes all interrupt, mask, and sense bits associated with INTB control. For more detailed behavioral descriptions, refer to the related chapters.

Table 115. Interrupt, Mask and Sense Bits

Interrupt	Mask	Sense	Purpose	Trigger	Debounce time (ms)
LOWVINI	LOWVINM	LOWVINS	Low input voltage detect Sense is 1 if below 2.80 V threshold	H to L	3.9[(79)]
PWRONI	PWRONM	PWRONS	Power on button event	H to L	31.25[(79)]
			Sense is 1 if PWRON is high.	L to H	31.25
THERM110	THERM110M	THERM110S	Thermal 110 °C threshold Sense is 1 if above threshold	Dual	3.9
THERM120	THERM120M	THERM120S	Thermal 120 °C threshold Sense is 1 if above threshold	Dual	3.9
THERM125	THERM125M	THERM125S	Thermal 125 °C threshold Sense is 1 if above threshold	Dual	3.9
THERM130	THERM130M	THERM130S	Thermal 130 °C threshold Sense is 1 if above threshold	Dual	3.9
SW1AFAULTI	SW1AFAULTM	SW1AFAULTS	Regulator 1A overcurrent limit Sense is 1 if above current limit	L to H	8.0
SW1BFAULTI	SW1BFAULTM	SW1BFAULTS	Regulator 1B overcurrent limit Sense is 1 if above current limit	L to H	8.0
SW1CFAULTI	SW1CFAULTM	SW1CFAULTS	Regulator 1C overcurrent limit Sense is 1 if above current limit	L to H	8.0
SW2FAULTI	SW2FAULTM	SW2FAULTS	Regulator 2 overcurrent limit Sense is 1 if above current limit	L to H	8.0
SW3AFAULTI	SW3AFAULTM	SW3AFAULTS	Regulator 3A overcurrent limit Sense is 1 if above current limit	L to H	8.0
SW3BFAULTI	SW3BFAULTM	SW3BFAULTS	Regulator 3B overcurrent limit Sense is 1 if above current limit	L to H	8.0
SW4FAULTI	SW4FAULTM	SW4FAULTS	Regulator 4 overcurrent limit Sense is 1 if above current limit	L to H	8.0

Table 115. Interrupt, Mask and Sense Bits (continued)

Interrupt	Mask	Sense	Purpose	Trigger	Debounce time (ms)
SWBSTFAULTI	SWBSTFAULTM	SWBSTFAULTS	SWBST overcurrent limit Sense is 1 if above current limit	L to H	8.0
VGEN1FAULTI	VGEN1FAULTM	VGEN1FAULTS	VGEN1 overcurrent limit Sense is 1 if above current limit	L to H	8.0
VGEN2FAULTI	VGEN2FAULTM	VGEN2FAULTS	VGEN2 overcurrent limit Sense is 1 if above current limit	L to H	8.0
VGEN3FAULTI	VGEN3FAULTM	VGEN3FAULTS	VGEN3 overcurrent limit Sense is 1 if above current limit	L to H	8.0
VGEN4FAULTI	VGEN4FAULTM	VGEN4FAULTS	VGEN4 overcurrent limit Sense is 1 if above current limit	L to H	8.0
VGEN5FAULTI	VGEN5FAULTM	VGEN1FAULTS	VGEN5 overcurrent limit Sense is 1 if above current limit	L to H	8.0
VGEN6FAULTI	VGEN6FAULTM	VGEN6FAULTS	VGEN6 overcurrent limit Sense is 1 if above current limit	L to H	8.0
OTP_ECCI	OTP_ECCM	OTP_ECCS	1 or 2 bit error detected in OTP registers Sense is 1 if error detected	L to H	8.0

Notes
79. Debounce timing for the falling edge can be extended with PWRONDBNC[1:0].

A full description of all interrupt, mask, and sense registers is provided in Tables 116 to 127.

Table 116. Register INTSTAT0 - ADDR 0x05

Name	Bit #	R/W	Default	Description
PWRONI	0	R/W1C	0	Power on interrupt bit
LOWVINI	1	R/W1C	0	Low-voltage interrupt bit
THERM110I	2	R/W1C	0	110 °C thermal interrupt bit
THERM120I	3	R/W1C	0	120 °C thermal interrupt bit
THERM125I	4	R/W1C	0	125 °C thermal interrupt bit
THERM130I	5	R/W1C	0	130 °C thermal interrupt bit
UNUSED	7:6	–	00	unused

Table 117. Register INTMASK0 - ADDR 0x06

Name	Bit #	R/W	Default	Description
PWRONM	0	R/W1C	1	Power on interrupt mask bit
LOWVINM	1	R/W1C	1	Low-voltage interrupt mask bit
THERM110M	2	R/W1C	1	110 °C thermal interrupt mask bit
THERM120M	3	R/W1C	1	120 °C thermal interrupt mask bit
THERM125M	4	R/W1C	1	125 °C thermal interrupt mask bit
THERM130M	5	R/W1C	1	130 °C thermal interrupt mask bit
UNUSED	7:6	–	00	unused

Table 118. Register INTSENSE0 - ADDR 0x07

Name	Bit #	R/W	Default	Description
PWRONS	0	R	0	Power on sense bit 0 = PWRON low 1 = PWRON high
LOWVINS	1	R	0	Low-voltage sense bit 0 = VIN > 2.8 V 1 = VIN ≤ 2.8 V
THERM110S	2	R	0	110 °C thermal sense bit 0 = Below threshold 1 = Above threshold
THERM120S	3	R	0	120 °C thermal sense bit 0 = Below threshold 1 = Above threshold
THERM125S	4	R	0	125 °C thermal sense bit 0 = Below threshold 1 = Above threshold
THERM130S	5	R	0	130 °C thermal sense bit 0 = Below threshold 1 = Above threshold
UNUSED	6	–	0	unused
VDDOTPS	7	R	00	Additional VDDOTP voltage sense pin 0 = VDDOTP grounded 1 = VDDOTP to VCOREDIG or greater

Table 119. Register INTSTAT1 - ADDR 0x08

Name	Bit #	R/W	Default	Description
SW1AFAULTI	0	R/W1C	0	SW1A overcurrent interrupt bit
SW1BFAULTI	1	R/W1C	0	SW1B overcurrent interrupt bit
SW1CFAULTI	2	R/W1C	0	SW1C overcurrent interrupt bit
SW2FAULTI	3	R/W1C	0	SW2 overcurrent interrupt bit
SW3AFAULTI	4	R/W1C	0	SW3A overcurrent interrupt bit
SW3BFAULTI	5	R/W1C	0	SW3B overcurrent interrupt bit
SW4FAULTI	6	R/W1C	0	SW4 overcurrent interrupt bit
UNUSED	7	–	0	unused

Table 120. Register INTMASK1 - ADDR 0x09

Name	Bit #	R/W	Default	Description
SW1AFAULTM	0	R/W	1	SW1A overcurrent interrupt mask bit
SW1BFAULTM	1	R/W	1	SW1B overcurrent interrupt mask bit
SW1CFAULTM	2	R/W	1	SW1C overcurrent interrupt mask bit
SW2FAULTM	3	R/W	1	SW2 overcurrent interrupt mask bit
SW3AFAULTM	4	R/W	1	SW3A overcurrent interrupt mask bit
SW3BFAULTM	5	R/W	1	SW3B overcurrent interrupt mask bit
SW4FAULTM	6	R/W	1	SW4 overcurrent interrupt mask bit
UNUSED	7	–	0	unused

Table 121. Register INTSENSE1 - ADDR 0x0A

Name	Bit #	R/W	Default	Description
SW1AFAULTS	0	R	0	SW1A overcurrent sense bit 0 = Normal operation 1 = Above current limit
SW1BFAULTS	1	R	0	SW1B overcurrent sense bit 0 = Normal operation 1 = Above current limit
SW1CFAULTS	2	R	0	SW1C overcurrent sense bit 0 = Normal operation 1 = Above current limit
SW2FAULTS	3	R	0	SW2 overcurrent sense bit 0 = Normal operation 1 = Above current limit
SW3AFAULTS	4	R	0	SW3A overcurrent sense bit 0 = Normal operation 1 = Above current limit
SW3BFAULTS	5	R	0	SW3B overcurrent sense bit 0 = Normal operation 1 = Above current limit
SW4FAULTS	6	R	0	SW4 overcurrent sense bit 0 = Normal operation 1 = Above current limit
UNUSED	7	–	0	unused

Table 122. Register INTSTAT3 - ADDR 0x0E

Name	Bit #	R/W	Default	Description
SWBSTFAULTI	0	R/W1C	0	SWBST overcurrent limit interrupt bit
UNUSED	6:1	–	0x00	unused
OTP_ECCI	7	R/W1C	0	OTP error interrupt bit

Table 123. Register INTMASK3 - ADDR 0x0F

Name	Bit #	R/W	Default	Description
SWBSTFAULTM	0	R/W	1	SWBST overcurrent limit interrupt mask bit
UNUSED	6:1	–	0x00	unused
OTP_ECCM	7	R/W	1	OTP error interrupt mask bit

Table 124. Register INTSENSE3 - ADDR 0x10

Name	Bit #	R/W	Default	Description
SWBSTFAULTS	0	R	0	SWBST overcurrent limit sense bit 0 = Normal operation 1 = Above current limit
UNUSED	6:1	–	0x00	unused
OTP_ECCS	7	R	0	OTP error sense bit 0 = No error detected 1 = OTP error detected

Table 125. Register INTSTAT4 - ADDR 0x11

Name	Bit #	R/W	Default	Description
VGEN1FAULTI	0	R/W1C	0	VGEN1 overcurrent interrupt bit
VGEN2FAULTI	1	R/W1C	0	VGEN2 overcurrent interrupt bit
VGEN3FAULTI	2	R/W1C	0	VGEN3 overcurrent interrupt bit
VGEN4FAULTI	3	R/W1C	0	VGEN4 overcurrent interrupt bit
VGEN5FAULTI	4	R/W1C	0	VGEN5 overcurrent interrupt bit
VGEN6FAULTI	5	R/W1C	0	VGEN6 overcurrent interrupt bit
UNUSED	7:6	–	00	unused

Table 126. Register INTMASK4 - ADDR 0x12

Name	Bit #	R/W	Default	Description
VGEN1FAULTM	0	R/W	1	VGEN1 overcurrent interrupt mask bit
VGEN2FAULTM	1	R/W	1	VGEN2 overcurrent interrupt mask bit
VGEN3FAULTM	2	R/W	1	VGEN3 overcurrent interrupt mask bit
VGEN4FAULTM	3	R/W	1	VGEN4 overcurrent interrupt mask bit
VGEN5FAULTM	4	R/W	1	VGEN5 overcurrent interrupt mask bit
VGEN6FAULTM	5	R/W	1	VGEN6 overcurrent interrupt mask bit
UNUSED	7:6	–	00	unused

Table 127. Register INTSENSE4 - ADDR 0x13

Name	Bit #	R/W	Default	Description
VGEN1FAULTS	0	R	0	VGEN1 overcurrent sense bit 0 = Normal operation 1 = Above current limit
VGEN2FAULTS	1	R	0	VGEN2 overcurrent sense bit 0 = Normal operation 1 = Above current limit
VGEN3FAULTS	2	R	0	VGEN3 overcurrent sense bit 0 = Normal operation 1 = Above current limit
VGEN4FAULTS	3	R	0	VGEN4 overcurrent sense bit 0 = Normal operation 1 = Above current limit
VGEN5FAULTS	4	R	0	VGEN5 overcurrent sense bit 0 = Normal operation 1 = Above current limit
VGEN6FAULTS	5	R	0	VGEN6 overcurrent sense bit 0 = Normal operation 1 = Above current limit
UNUSED	7:6	–	00	unused

6.5.5 Specific registers

6.5.5.1 IC and version identification

The IC and other version details can be read via identification bits. These are hard-wired on chip and described in Tables 128 to 130.

Table 128. Register DEVICEID - ADDR 0x00

Name	Bit #	R/W	Default	Description
DEVICEID	3:0	R	0x00	Die version. 0000 = PF0100
UNUSED	7:4	–	0x01	Unused

Table 129. Register SILICON REV- ADDR 0x03

Name	Bit #	R/W	Default	Description
METAL_LAYER_REV	3:0	R	0x00	Represents the metal mask revision Pass 0.0 = 0000 . . Pass 0.15 = 1111
FULL_LAYER_REV	7:4	R	0x01	Represents the full mask revision Pass 1.0 = 0001 . . Pass 15.0 = 1111

Table 130. Register FABID - ADDR 0x04

Name	Bit #	R/W	Default	Description
FIN	1:0	R	0x00	Allows for characterizing different options within the same reticule
FAB	3:2	R	0x00	Represents the wafer manufacturing facility
Unused	7:0	R	0x00	unused

6.5.5.2 Embedded memory

There are four register banks of general purpose embedded memory to store critical data. The data written to MEMA[7:0], MEMB[7:0], MEMC[7:0], and MEMD[7:0] is maintained by the coin cell when the main battery is deeply discharged, removed, or contact-bounced. The contents of the embedded memory are reset by COINPORB. The banks can be used for any system need for bit retention with coin cell backup.

Table 131. Register MEMA ADDR 0x1C

Name	Bit #	R/W	Default	Description
MEMA	7:0	R/W	0	Memory bank A

Table 132. Register MEMB ADDR 0x1D

Name	Bit #	R/W	Default	Description
MEMB	7:0	R/W	0	Memory bank B

Table 133. Register MEMC ADDR 0x1E

Name	Bit #	R/W	Default	Description
MEMC	7:0	R/W	0	Memory bank C

Table 134. Register MEMD ADDR 0x1F

Name	Bit #	R/W	Default	Description
MEMD	7:0	R/W	0	Memory bank D

6.5.6 Register Bitmap

The register map is comprised of thirty-two pages, and its address and data fields are each eight bits wide. Only the first two pages can be accessed. On each page, registers 0 to 0x7F are referred to as 'functional', and registers 0x80 to 0xFF as 'extended'. On each page, the functional registers are the same, but the extended registers are different. To access registers in Table 136. Extended page 1, page 106, one must first write 0x01 to the page register at address 0x7F, and to access registers Table 137. Extended page 2, page 110, one must first write 0x02 to the page register at address 0x7F. To access the Table 135. Functional page, page 103 from one of the extended pages, no write to the page register is necessary.

Registers missing in the sequence are reserved; reading from them returns a value 0x00, and writing to them has no effect. The contents of all registers are given in the tables defined in this chapter; each table is structure as follows:

Name: Name of the bit.

Bit #: The bit location in the register (7-0)

R/W: Read / Write access and control

- R is read-only access
- R/W is read and write access
- RW1C is read and write access with write 1 to clear

Reset: Reset signals are color coded based on the following legend.

Bits reset by SC and VCOREDIG_PORB
Bits reset by PWRON or loaded default or OTP configuration
Bits reset by DIGRESETB
Bits reset by PORB or RESETBMCU
Bits reset by VCOREDIG_PORB
Bits reset by POR or OFFB

Default: The value after reset, as noted in the default column of the memory map.

- Fixed defaults are explicitly declared as 0 or 1.
- “X” corresponds to Read / Write bits initialized at start-up, based on the OTP fuse settings or default if VDDOTP = 1.5 V. Bits are subsequently I^2C modifiable, when their reset has been released. “X” may also refer to bits which may have other dependencies. For example, some bits may depend on the version of the IC, or a value from an analog block, for instance the sense bits for the interrupts.

6.5.6.1 Register map

Table 135. Functional page

Add	Register Name	R/W	Default	BITS[7:0]							
				7	6	5	4	3	2	1	0
00	DeviceID	R	8'b0001_0000	–	–	–	–	DEVICE ID [3:0]			
				0	0	0	1	0	0	0	0
03	SILICONREVID	R	8'b0001_0000	FULL_LAYER_REV[3:0]				METAL_LAYER_REV[3:0]			
				X	X	X	X	X	X	X	X
04	FABID	R	8'b0000_0000	–	–	–	–	FAB[1:0]		FIN[1:0]	
				0	0	0	0	0	0	0	0
05	INTSTAT0	RW1C	8'b0000_0000	–	–	THERM130I	THERM125I	THERM120I	THERM110I	LOWVINI	PWRONI
				0	0	0	0	0	0	0	0
06	INTMASK0	R/W	8'b0011_1111	–	–	THERM130M	THERM125M	THERM120M	THERM110M	LOWVINM	PWRONM
				0	0	1	1	1	1	1	1
07	INTSENSE0	R	8'b00xx_xxxx	VDDOTPS	RSVD	THERM130S	THERM125S	THERM120S	THERM110S	LOWVINS	PWRONS
				0	0	x	x	x	x	x	x
08	INTSTAT1	RW1C	8'b0000_0000	–	SW4FAULTI	SW3BFAULTI	SW3AFAULTI	SW2FAULTI	SW1CFAULTI	SW1BFAULTI	SW1AFAULTI
				0	0	0	0	0	0	0	0
09	INTMASK1	R/W	8'b0111_1111	–	SW4FAULTM	SW3BFAULTM	SW3AFAULTM	SW2FAULTM	SW1CFAULTM	SW1BFAULTM	SW1AFAULTM
				0	1	1	1	1	1	1	1
0A	INTSENSE1	R	8'b0xxx_xxxx	–	SW4FAULTS	SW3BFAULTS	SW3AFAULTS	SW2FAULTS	SW1CFAULTS	SW1BFAULTS	SW1AFAULTS
				0	x	x	x	x	x	x	x
0E	INTSTAT3	RW1C	8'b0000_0000	OTP_ECCI	–	–	–	–	–	–	SWBSTFAULTI
				0	0	0	0	0	0	0	0
0F	INTMASK3	R/W	8'b1000_0001	OTP_ECCM	–	–	–	–	–	–	SWBSTFAULTM
				1	0	0	0	0	0	0	1
10	INTSENSE3	R	8'b0000_000x	OTP_ECCS	–	–	–	–	–	–	SWBSTFAULTS
				0	0	0	0	0	0	0	x
11	INTSTAT4	RW1C	8'b0000_0000	–	–	VGEN6FAULTI	VGEN5FAULTI	VGEN4FAULTI	VGEN3FAULTI	VGEN2FAULTI	VGEN1FAULTI
				0	0	0	0	0	0	0	0
12	INTMASK4	R/W	8'b0011_1111	–	–	VGEN6 FAULTM	VGEN5 FAULTM	VGEN4 FAULTM	VGEN3 FAULTM	VGEN2 FAULTM	VGEN1 FAULTM
				0	0	1	1	1	1	1	1
13	INTSENSE4	R	8'b00xx_xxxx	–	–	VGEN6 FAULTS	VGEN5 FAULTS	VGEN4 FAULTS	VGEN3 FAULTS	VGEN2 FAULTS	VGEN1 FAULTS
				0	0	x	x	x	x	x	x
1A	COINCTL	R/W	8'b0000_0000	–	–	–	–	COINCHEN	VCOIN[2:0]		
				0	0	0	0	0	0	0	0

Table 135. Functional page (continued)

Add	Register Name	R/W	Default	BITS[7:0]							
				7	6	5	4	3	2	1	0
1B	PWRCTL	R/W	8'b0001_0000	REGSCPEN	STANDBYINV	STBYDLY[1:0]		PWRONBDBNC[1:0]		PWRONRSTEN	RESTARTEN
				0	0	0	1	0	0	0	0
1C	MEMA	R/W	8'b0000_0000	MEMA[7:0]							
				0	0	0	0	0	0	0	0
1D	MEMB	R/W	8'b0000_0000	MEMB[7:0]							
				0	0	0	0	0	0	0	0
1E	MEMC	R/W	8'b0000_0000	MEMC[7:0]							
				0	0	0	0	0	0	0	0
1F	MEMD	R/W	8'b0000_0000	MEMD[7:0]							
				0	0	0	0	0	0	0	0
20	SW1ABVOLT	R/W/M	8'b00xx_xxxx	–	–	SW1AB[5:0]					
				0	0	x	x	x	x	x	x
21	SW1ABSTBY	R/W	8'b00xx_xxxx	–	–	SW1ABSTBY[5:0]					
				0	0	x	x	x	x	x	x
22	SW1ABOFF	R/W	8'b00xx_xxxx	–	–	SW1ABOFF[5:0]					
				0	0	x	x	x	x	x	x
23	SW1ABMODE	R/W	8'b0000_1000	–	–	SW1ABOMODE	–	SW1ABMODE[3:0]			
				0	0	0	0	1	0	0	0
24	SW1ABCONF	R/W	8'bxx00_xx00	SW1ABDVSSPEED[1:0]		SW1BAPHASE[1:0]		SW1ABFREQ[1:0]		–	SW1ABILIM
				x	x	0	0	x	x	0	0
2E	SW1CVOLT	R/W	8'b00xx_xxxx	–	–	SW1C[5:0]					
				0	0	x	x	x	x	x	x
2F	SW1CSTBY	R/W	8'b00xx_xxxx	–	–	SW1CSTBY[5:0]					
				0	0	x	x	x	x	x	x
30	SW1COFF	R/W	8'b00xx_xxxx	–	–	SW1COFF[5:0]					
				0	0	x	x	x	x	x	x
31	SW1CMODE	R/W	8'b0000_1000	–	–	SW1COMODE	–	SW1CMODE[3:0]			
				0	0	0	0	1	0	0	0
32	SW1CCONF	R/W	8'bxx00_xx00	SW1CDVSSPEED[1:0]		SW1CPHASE[1:0]		SW1CFREQ[1:0]		–	SW1CILIM
				x	x	0	0	x	x	0	0
35	SW2VOLT	R/W	8'b0xxx_xxxx	–	SW2[6:0]						
				0	x	x	x	x	x	x	x
36	SW2STBY	R/W	8'b0xxx_xxxx	–	SW2STBY[6:0]						
				0	x	x	x	x	x	x	x
37	SW2OFF	R/W	8'b0xxx_xxxx	–	SW2OFF[6:0]						
				0	x	x	x	x	x	x	x

Table 135. Functional page (continued)

Add	Register Name	R/W	Default	BITS[7:0]							
				7	6	5	4	3	2	1	0
38	SW2MODE	R/W	8'b0000_1000	–	–	SW2OMODE	–	SW2MODE[3:0]			
				0	0	0	0	1	0	0	0
39	SW2CONF	R/W	8'bxx01_xx00	SW2DVSSPEED[1:0]		SW2PHASE[1:0]		SW2FREQ[1:0]		–	SW2ILIM
				x	x	0	1	x	x	0	0
3C	SW3AVOLT	R/W	8'b0xxx_xxxx	–	SW3A[6:0]						
				0	x	x	x	x	x	x	x
3D	SW3ASTBY	R/W	8'b0xxx_xxxx	–	SW3ASTBY[6:0]						
				0	x	x	x	x	x	x	x
3E	SW3AOFF	R/W	8'b0xxx_xxxx	–	SW3AOFF[6:0]						
				0	x	x	x	x	x	x	x
3F	SW3AMODE	R/W	8'b0000_1000			SW3AOMODE	–	SW3AMODE[3:0]			
				0	0	0	0	1	0	0	0
40	SW3ACONF	R/W	8'bxx10_xx00	SW3ADVSSPEED[1:0]		SW3APHASE[1:0]		SW3AFREQ[1:0]		–	SW3AILIM
				x	x	1	0	x	x	0	0
43	SW3BVOLT	R/W	8'b0xxx_xxxx	–	SW3B[6:0]						
				0	x	x	x	x	x	x	x
44	SW3BSTBY	R/W	8'b0xxx_xxxx	–	SW3BSTBY[6:0]						
				0	x	x	x	x	x	x	x
45	SW3BOFF	R/W	8'b0xxx_xxxx	–	SW3BOFF[6:0]						
				0	x	x	x	x	x	x	x
46	SW3BMODE	R/W	8'b0000_1000	–	–	SW3BOMODE	–	SW3BMODE[3:0]			
				0	0	0	0	1	0	0	0
47	SW3BCONF	R/W	8'bxx10_xx00	SW3BDVSSPEED[1:0]		SW3BPHASE[1:0]		SW3BFREQ[1:0]		–	SW3BILIM
				x	x	1	0	x	x	0	0
4A	SW4VOLT	R/W	8'b0xxx_xxxx	–	SW4[6:0]						
				0	x	x	x	x	x	x	x
4B	SW4STBY	R/W	8'b0xxx_xxxx	–	SW4STBY[6:0]						
				0	x	x	x	x	x	x	x
4C	SW4OFF	R/W	8'b0xxx_xxxx	–	SW4OFF[6:0]						
				0	x	x	x	x	x	x	x
4D	SW4MODE	R/W	8'b0000_1000	–	–	SW4OMODE	–	SW4MODE[3:0]			
				0	0	0	0	1	0	0	0
4E	SW4CONF	R/W	8'bxx11_xx00	SW4DVSSPEED[1:0]		SW4PHASE[1:0]		SW4FREQ[1:0]		–	SW4ILIM
				x	x	1	1	x	x	0	0

Table 135. Functional page (continued)

Add	Register Name	R/W	Default	BITS[7:0]							
				7	6	5	4	3	2	1	0
66	SWBSTCTL	R/W	8'b0xx0_10xx	–	SWBST1STBYMODE[1:0]		–	SWBST1MODE[1:0]		SWBST1VOLT[1:0]	
				0	x	x	0	1	0	x	x
6A	VREFDDRCTL	R/W	8'b000x_0000	–	–	–	VREFDDREN	–	–	–	–
				0	0	0	x	0	0	0	0
6B	VSNVSCTL	R/W	8'b0000_0xxx	–	–	–	–	–	VSNVSVOLT[2:0]		
				0	0	0	0	0	0	x	x
6C	VGEN1CTL	R/W	8'b000x_xxxx	–	VGEN1LPWR	VGEN1STBY	VGEN1EN	VGEN1[3:0]			
				0	0	0	x	x	x	x	x
6D	VGEN2CTL	R/W	8'b000x_xxxx	–	VGEN2LPWR	VGEN2STBY	VGEN2EN	VGEN2[3:0]			
				0	0	0	x	x	x	x	x
6E	VGEN3CTL	R/W	8'b000x_xxxx	–	VGEN3LPWR	VGEN3STBY	VGEN3EN	VGEN3[3:0]			
				0	0	0	x	x	x	x	x
6F	VGEN4CTL	R/W	8'b000x_xxxx	–	VGEN4LPWR	VGEN4STBY	VGEN4EN	VGEN4[3:0]			
				0	0	0	x	x	x	x	x
70	VGEN5CTL	R/W	8'b000x_xxxx	–	VGEN5LPWR	VGEN5STBY	VGEN5EN	VGEN5[3:0]			
				0	0	0	x	x	x	x	x
71	VGEN6CTL	R/W	8'b000x_xxxx	–	VGEN6LPWR	VGEN6STBY	VGEN6EN	VGEN6[3:0]			
				0	0	0	x	x	x	x	x
7F	Page Register	R/W	8'b0000_0000	–	–	–	PAGE[4:0]				
				0	0	0	0	0	0	0	0

Table 136. Extended page 1

Address	Register Name	TYPE	Default	BITS[7:0]							
				7	6	5	4	3	2	1	0
80	OTP FUSE READ EN	R/W	8'b000x_xxx0	–	–	–	–	–	–	–	OTP FUSE READ EN
				0	0	0	x	x	x	x	0
84	OTP LOAD MASK	R/W	8'b0000_0000	START	RL PWBRTN	FORCE PWRCTL	RL PWRCTL	RL OTP	RL OTP ECC	RL OTP FUSE	RL TRIM FUSE
				0	0	0	0	0	0	0	0
8A	OTP ECC SE1	R	8'bxxx0_0000	–	–	–	ECC5_SE	ECC4_SE	ECC3_SE	ECC2_SE	ECC1_SE
				x	x	x	0	0	0	0	0
8B	OTP ECC SE2	R	8'bxxx0_0000	–	–	–	ECC10_SE	ECC9_SE	ECC8_SE	ECC7_SE	ECC6_SE
				x	x	x	0	0	0	0	0
8C	OTP ECC DE1	R	8'bxxx0_0000	–	–	–	ECC5_DE	ECC4_DE	ECC3_DE	ECC2_DE	ECC1_DE
				x	x	x	0	0	0	0	0

Table 136. Extended page 1 (continued)

Address	Register Name	TYPE	Default	BITS[7:0]							
				7	6	5	4	3	2	1	0
8D	OTP ECC DE2	R	8'bxxx0_0000	–	–	–	ECC10_DE	ECC9_DE	ECC8_DE	ECC7_DE	ECC6_DE
				x	x	x	0	0	0	0	0
A0	OTP SW1AB VOLT	R/W	8'b00xx_xxxx	–	–	SW1AB_VOLT[5:0]					
				0	0	x	x	x	x	x	x
A1	OTP SW1AB SEQ	R/W	8'b000x_xxXx	–			SW1AB_SEQ[4:0]				
				0	0	0	x	x	x	X	x
A2	OTP SW1AB CONFIG	R/W	8'b0000_xxxx	–	–	–	–	SW1_CONFIG[1:0]		SW1AB_FREQ[1:0]	
				0	0	0	0	x	x	x	x
A8	OTP SW1C VOLT	R/W	8'b00xx_xxxx	–	–	SW1C_VOLT[5:0]					
				0	0	x	x	x	x	x	x
A9	OTP SW1C SEQ	R/W	8'b000x_xxxx	–			SW1C_SEQ[4:0]				
				0	0	0	x	x	x	x	x
AA	OTP SW1C CONFIG	R/W	8'b0000_00xx	–	–	–	–	–	–	SW1C_FREQ[1:0]	
				0	0	0	0	0	0	x	x
AC	OTP SW2 VOLT	R/W	8'b0xxx_xxxx	–	SW2_VOLT[5:0]						
				0	x	x	x	x	x	x	x
AD	OTP SW2 SEQ	R/W	8'b000x_xxxx	–	–		SW2_SEQ[4:0]				
				0	0	0	x	x	x	x	x
AE	OTP SW2 CONFIG	R/W	8'b0000_00xx	–	–	–	–	–	–	SW2_FREQ[1:0]	
				0	0	0	0	0	0	x	x
B0	OTP SW3A VOLT	R/W	8'b0xxx_xxxx	–	SW3A_VOLT[6:0]						
				0	x	x	x	x	x	x	x
B1	OTP SW3A SEQ	R/W	8'b000x_xxxx	–	–		SW3A_SEQ[4:0]				
				0	0	0	x	x	x	x	x
B2	OTP SW3A CONFIG	R/W	8'b0000_xxxx	–	–	–	–	SW3_CONFIG[1:0]		SW3A_FREQ[1:0]	
				0	0	0	0	x	x	x	x
B4	OTP SW3B VOLT	R/W	8'b0xxx_xxxx	–	SW3B_VOLT[6:0]						
				0	x	x	x	x	x	x	x
B5	OTP SW3B SEQ	R/W	8'b000x_xxxx	–	–		SW3B_SEQ[4:0]				
				0	0	0	x	x	x	x	x
B6	OTP SW3B CONFIG	R/W	8'b0000_00xx	–	–	–	–	–	–	SW3B_CONFIG[1:0]	
				0	0	0	0	0	0	x	x

Table 136. Extended page 1 (continued)

Address	Register Name	TYPE	Default	BITS[7:0]							
				7	6	5	4	3	2	1	0
B8	OTP SW4 VOLT	R/W	8'b00xx_xxxx	–	SW4_VOLT[6:0]						
				0	0	x	x	x	x	x	x
B9	OTP SW4 SEQ	R/W	8'b000x_xxxx	–	–	–	SW4_SEQ[4:0]				
				0	0	0	x	x	x	x	x
BA	OTP SW4 CONFIG	R/W	8'b000x_xxxx	–	–	–	VTT	–	–	SW4_FREQ[1:0]	
				0	0	0	x	x	x	x	x
BC	OTP SWBST VOLT	R/W	8'b0000_00xx	–	–	–	–	–	–	SWBST_VOLT[1:0]	
				0	0	0	0	0	0	x	x
BD	OTP SWBST SEQ	R/W	8'b0000_xxxx	–	–	–	SWBST_SEQ[4:0]				
				0	0	0	0	x	x	x	x
C0	OTP VSNVS VOLT	R/W	8'b0000_0xxx	–	–	–	–	–	VSNVS_VOLT[2:0]		
				0	0	0	0	0	0	x	x
C4	OTP VREFDDR SEQ	R/W	8'b000x_x0xx	–	–	–	VREFDDR_SEQ[4:0]				
				0	0	0	x	x	0	x	x
C8	OTP VGEN1 VOLT	R/W	8'b0000_xxxx	–	–	–	–	VGEN1_VOLT[3:0]			
				0	0	0	0	x	x	x	x
C9	OTP VGEN1 SEQ	R/W	8'b000x_xxxx	–	–	–	VGEN1_SEQ[4:0]				
				0	0	0	x	x	x	x	x
CC	OTP VGEN2 VOLT	R/W	8'b0000_xxxx	–	–	–	–	VGEN2_VOLT[3:0]			
				0	0	0	0	x	x	x	x
CD	OTP VGEN2 SEQ	R/W	8'b000x_xxxx	–	–	–	VGEN2_SEQ[4:0]				
				0	0	0	x	x	x	x	x
D0	OTP VGEN3 VOLT	R/W	8'b0000_xxxx	–	–	–	–	VGEN3_VOLT[3:0]			
				0	0	0	0	x	x	x	x
D1	OTP VGEN3 SEQ	R/W	8'b000x_xxxx	–	–	–	VGEN3_SEQ[4:0]				
				0	0	0	x	x	x	x	x
D4	OTP VGEN4 VOLT	R/W	8'b0000_xxxx	–	–	–	–	VGEN4_VOLT[3:0]			
				0	0	0	0	x	x	x	x
D5	OTP VGEN4 SEQ	R/W	8'b000x_xxxx	–	–	–	VGEN4_SEQ[4:0]				
				0	0	0	x	x	x	x	x

Table 136. Extended page 1 (continued)

Address	Register Name	TYPE	Default	BITS[7:0]							
				7	6	5	4	3	2	1	0
D8	OTP VGEN5 VOLT	R/W	8'b0000_xxxx	–	–	–	–	VGEN5_VOLT[3:0]			
				0	0	0	0	x	x	x	x
D9	OTP VGEN5 SEQ	R/W	8'b000x_xxxx	–	–	–	VGEN5_SEQ[4:0]				
				0	0	0	x	x	x	x	x
DC	OTP VGEN6 VOLT	R/W	8'b0000_xxxx	–	–	–	–	VGEN6_VOLT[3:0]			
				0	0	0	0	x	x	x	x
DD	OTP VGEN6 SEQ	R/W	8'b000x_xxxx	–	–	–	VGEN6_SEQ[4:0]				
				0	0	0	x	x	x	x	x
E0	OTP PU CONFIG1	R/W	8'b000x_xxxx	–	–	–	PWRON_ CFG1	SWDVS_CLK1[1:0]		SEQ_CLK_SPEED1[1:0]	
				0	0	0	x	x	x	x	x
E1	OTP PU CONFIG2	R/W	8'b000x_xxxx	–	–	–	PWRON_ CFG2	SWDVS_CLK2[1:0]		SEQ_CLK_SPEED2[1:0]	
				0	0	0	x	x	x	x	x
E2	OTP PU CONFIG3	R/W	8'b000x_xxxx	–	–	–	PWRON_ CFG3	SWDVS_CLK3[1:0]		SEQ_CLK_SPEED3[1:0]	
				0	0	0	x	x	x	x	x
E3	OTP PU CONFIG XOR	R	8'b000x_xxxx	–	–	–	PWRON_CFG _XOR	SWDVS_CLK3_XOR		SEQ_CLK_SPEED_XOR	
				0	0	0	x	x	x	x	x
E4 (80)	OTP FUSE POR1	R/W	8'b0000_00x0	TBB_POR	SOFT_FUSE_ POR	–	–	–	–	FUSE_POR1	–
				0	0	0	0	0	0	x	0
E5	OTP FUSE POR1	R/W	8'b0000_00x0	RSVD	RSVD	–	–	–	–	FUSE_POR2	–
				0	0	0	0	0	0	x	0
E6	OTP FUSE POR1	R/W	8'b0000_00x0	RSVD	RSVD	–	–	–	–	FUSE_POR3	–
				0	0	0	0	0	0	x	0
E7	OTP FUSE POR XOR	R	8'b0000_00x0	RSVD	RSVD	–	–	–	–	FUSE_POR_X OR	–
				0	0	0	0	0	0	x	0
E8	OTP PWRGD EN	R/W/M	8'b0000_000x	–	–	–	–	–	–	–	OTP_PG_EN
				0	0	0	0	0	0	x	0
F0	OTP EN ECCO	R/W	8'b000x_xxxx	–	–	–	EN_ECC_ BANK5	EN_ECC_ BANK4	EN_ECC_ BANK3	EN_ECC_ BANK2	EN_ECC_ BANK1
				0	0	0	x	x	x	x	x
F1	OTP EN ECC1	R/W	8'b000x_xxxx	–	–	–	EN_ECC_ BANK10	EN_ECC_ BANK9	EN_ECC_ BANK8	EN_ECC_ BANK7	EN_ECC_ BANK6
				0	0	0	x	x	x	x	x

Table 136. Extended page 1 (continued)

Address	Register Name	TYPE	Default	BITS[7:0]							
				7	6	5	4	3	2	1	0
F4	OTP SPARE2_4	R/W	8'b0000_xxxx	–	–	–	–	RSVD			
				0	0	0	0	x	x	x	x
F5	OTP SPARE4_3	R/W	8'b0000_0xxx	–	–	–	–	–	RSVD		
				0	0	0	0	0	x	x	x
F6	OTP SPARE6_2	R/W	8'b0000_00xx	–	–	–	–	–	–	RSVD	
				0	0	0	0	0	0	x	x
F7	OTP SPARE7_1	R/W	8'b0000_0xxx	–	–	–	–	–	–	–	RSVD
				0	0	0	0	0	x	x	x
FE	OTP DONE	R/W	8'b0000_000x	–	–	–	–	–	–	–	OTP_DONE
				0	0	0	0	0	0	0	x
FF	OTP I2C ADDR	R/W	8'b0000_0xxx	–	–	–	–	I2C_SLV ADDR[3]	I2C_SLV ADDR[2:0]		
				0	0	0	0	1	x	x	x

Notes

80. In the PF0100Z FUSE_POR1, FUSE_POR2, and FUSE_POR3 are XOR'ed into the FUSE_POR_XOR bit. The FUSE_POR_XOR has to be 1 for fuses to be loaded. This can be achieved by setting any one or all of the FUSE_PORx bits. In the PF0100AZ, the XOR function is removed. It is required to set all of the FUSE_PORx bits to be able to load the fuses.

Table 137. Extended page 2

Address	Register Name	TYPE	Default	BITS[7:0]							
				7	6	5	4	3	2	1	0
81	SW1AB PWRSTG	R/W	8'b1111_1111	RSVD	RSVD	RSVD	RSVD	RSVD	SW1AB_PWRSTG[2:0]		
				1	1	1	1	1	1	1	1
82	PWRSTG RSVD	R	8'b0000_0000	PWRSTGRSVD							
				0	0	0	0	0	0	0	0
83	SW1C PWRSTG	R	8'b1111_1111	RSVD	RSVD	RSVD	RSVD	RSVD	SW1C_PWRSTG[2:0]		
				1	1	1	1	1	1	1	1
84	SW2 PWRSTG	R	8'b1111_1111	RSVD	RSVD	RSVD	RSVD	RSVD	SW2_PWRSTG[2:0]		
				1	1	1	1	1	1	1	1
85	SW3A PWRSTG	R	8'b1111_1111	RSVD	RSVD	RSVD	RSVD	RSVD	SW3A_PWRSTG[2:0]		
				1	1	1	1	1	1	1	1
86	SW3B PWRSTG	R	8'b1111_1111	RSVD	RSVD	RSVD	RSVD	RSVD	SW3B_PWRSTG[2:0]		
				1	1	1	1	1	1	1	1
87	SW4 PWRSTG	R	8'b0111_1111	FSLEXT_ THERM_ DISABLE	PWRGD_ SHDWN_ DISABLE	RSVD	RSVD	RSVD	SW4_PWRSTG[2:0]		
				0	0	1	1	1	1	1	1
88	PWRCTRL OTP CTRL	R/W	8'b0000_0001	–	–	–	–	–	–	PWRGD_EN	OTP_ SHDWN_EN
				0	0	0	0	0	0	0	1

Table 137. Extended page 2 (continued)

Address	Register Name	TYPE	Default	BITS[7:0]							
				7	6	5	4	3	2	1	0
8D	I2C WRITE ADDRESS TRAP	R/W	8'b0000_0000	I2C_WRITE_ADDRESS_TRAP[7:0]							
				0	0	0	0	0	0	0	0
8E	I2C TRAP PAGE	R/W	8'b0000_0000	LET_IT_ ROLL	RSVD	RSVD	I2C_TRAP_PAGE[4:0]				
				0	0	0	0	0	0	0	0
8F	I2C TRAP CNTR	R/W	8'b0000_0000	I2C_WRITE_ADDRESS_COUNTER[7:0]							
				0	0	0	0	0	0	0	0
90	IO DRV	R/W	8'b00xx_xxxx	SDA_DRV[1:0]		SDWNB_DRV[1:0]		INTB_DRV[1:0]		RESETBMCU_DRV[1:0]	
				0	0	x	x	x	x	x	x
D0	OTP AUTO ECC0	R/W	8'b0000_0000	–	–	–	AUTO_ECC _BANK5	AUTO_ECC _BANK4	AUTO_ECC_B ANK3	AUTO_ECC _BANK2	AUTO_ECC_B ANK1
				0	0	0	0	0	0	0	0
D1	OTP AUTO ECC1	R/W	8'b0000_0000	–	–	–	AUTO_ECC_B ANK10	AUTO_ECC _BANK9	AUTO_ECC_B ANK8	AUTO_ECCBA NK7	AUTO_ECC_B ANK6
				0	0	0	0	0	0	0	0
D8	Reserved	–	8'b0000_0000	Reserved[81]							
D9	Reserved	–	8'b0000_0000	Reserved[81]							
E1	OTP ECC CTRL1	R/W	8'b0000_0000	ECC1_EN_ TBB	ECC1_CALC_ CIN	ECC1_CIN_TBB[5:0]					
				0	0	0	0	0	0	0	0
E2	OTP ECC CTRL2	R/W	8'b0000_0000	ECC2_EN_ TBB	ECC2_CALC_ CIN	ECC2_CIN_TBB[5:0]					
				0	0	0	0	0	0	0	0
E3	OTP ECC CTRL3	R/W	8'b0000_0000	ECC3_EN_ TBB	ECC3_CALC_ CIN	ECC3_CIN_TBB[5:0]					
				0	0	0	0	0	0	0	0
E4	OTP ECC CTRL4	R/W	8'b0000_0000	ECC4_EN_ TBB	ECC4_CALC_ CIN	ECC4_CIN_TBB[5:0]					
				0	0	0	0	0	0	0	0
E5	OTP ECC CTRL5	R/W	8'b0000_0000	ECC5_EN_ TBB	ECC5_CALC_ CIN	ECC5_CIN_TBB[5:0]					
				0	0	0	0	0	0	0	0
E6	OTP ECC CTRL6	R/W	8'b0000_0000	ECC6_EN_ TBB	ECC6_CALC_ CIN	ECC6_CIN_TBB[5:0]					
				0	0	0	0	0	0	0	0
E7	OTP ECC CTRL7	R/W	8'b0000_0000	ECC7_EN_ TBB	ECC7_CALC_ CIN	ECC7_CIN_TBB[5:0]					
				0	0	0	0	0	0	0	0
E8	OTP ECC CTRL8	R/W	8'b0000_0000	ECC8_EN_ TBB	ECC8_CALC_ CIN	ECC8_CIN_TBB[5:0]					
				0	0	0	0	0	0	0	0

Table 137. Extended page 2 (continued)

Address	Register Name	TYPE	Default	BITS[7:0]							
				7	6	5	4	3	2	1	0
E9	OTP ECC CTRL9	R/W	8'b0000_0000	ECC9_EN_TBB	ECC9_CALC_CIN	ECC9_CIN_TBB[5:0]					
				0	0	0	0	0	0	0	0
EA	OTP ECC CTRL10	R/W	8'b0000_0000	ECC10_EN_TBB	ECC10_CALC_CIN	ECC10_CIN_TBB[5:0]					
				0	0	0	0	0	0	0	0
F1	OTP FUSE CTRL1	R/W	8'b0000_0000	–	–	–	–	ANTIFUSE1_EN	ANTIFUSE1_LOAD	ANTIFUSE1_RW	BYPASS1
				0	0	0	0	0	0	0	0
F2	OTP FUSE CTRL2	R/W	8'b0000_0000	–	–	–	–	ANTIFUSE2_EN	ANTIFUSE2_LOAD	ANTIFUSE2_RW	BYPASS2
				0	0	0	0	0	0	0	0
F3	OTP FUSE CTRL3	R/W	8'b0000_0000	–	–	–	–	ANTIFUSE3_EN	ANTIFUSE3_LOAD	ANTIFUSE3_RW	BYPASS3
				0	0	0	0	0	0	0	0
F4	OTP FUSE CTRL4	R/W	8'b0000_0000	–	–	–	–	ANTIFUSE4_EN	ANTIFUSE4_LOAD	ANTIFUSE4_RW	BYPASS4
				0	0	0	0	0	0	0	0
F5	OTP FUSE CTRL5	R/W	8'b0000_0000	–	–	–	–	ANTIFUSE5_EN	ANTIFUSE5_LOAD	ANTIFUSE5_RW	BYPASS5
				0	0	0	0	0	0	0	0
F6	OTP FUSE CTRL6	R/W	8'b0000_0000	–	–	–	–	ANTIFUSE6_EN	ANTIFUSE6_LOAD	ANTIFUSE6_RW	BYPASS6
				0	0	0	0	0	0	0	0
F7	OTP FUSE CTRL7	R/W	8'b0000_0000	–	–	–	–	ANTIFUSE7_EN	ANTIFUSE7_LOAD	ANTIFUSE7_RW	BYPASS7
				0	0	0	0	0	0	0	0
F8	OTP FUSE CTRL8	R/W	8'b0000_0000	–	–	–	–	ANTIFUSE8_EN	ANTIFUSE8_LOAD	ANTIFUSE8_RW	BYPASS8
				0	0	0	0	0	0	0	0
F9	OTP FUSE CTRL9	R/W	8'b0000_0000	–	–	–	–	ANTIFUSE9_EN	ANTIFUSE99_LOAD	ANTIFUSE9_RW	BYPASS9
				0	0	0	0	0	0	0	0
FA	OTP FUSE CTRL10	R/W	8'b0000_0000	–	–	–	–	ANTIFUSE10_EN	ANTIFUSE10_LOAD	ANTIFUSE10_RW	BYPASS10
				0	0	0	0	0	0	0	0

Notes

81. Do not write in reserved registers.

7 Typical applications

7.1 Introduction

Figure 29 provides a typical application diagram of the PF0100Z PMIC together with its functional components. For details on component references and additional components such as filters, refer to the individual sections.

7.1.1 Application diagram

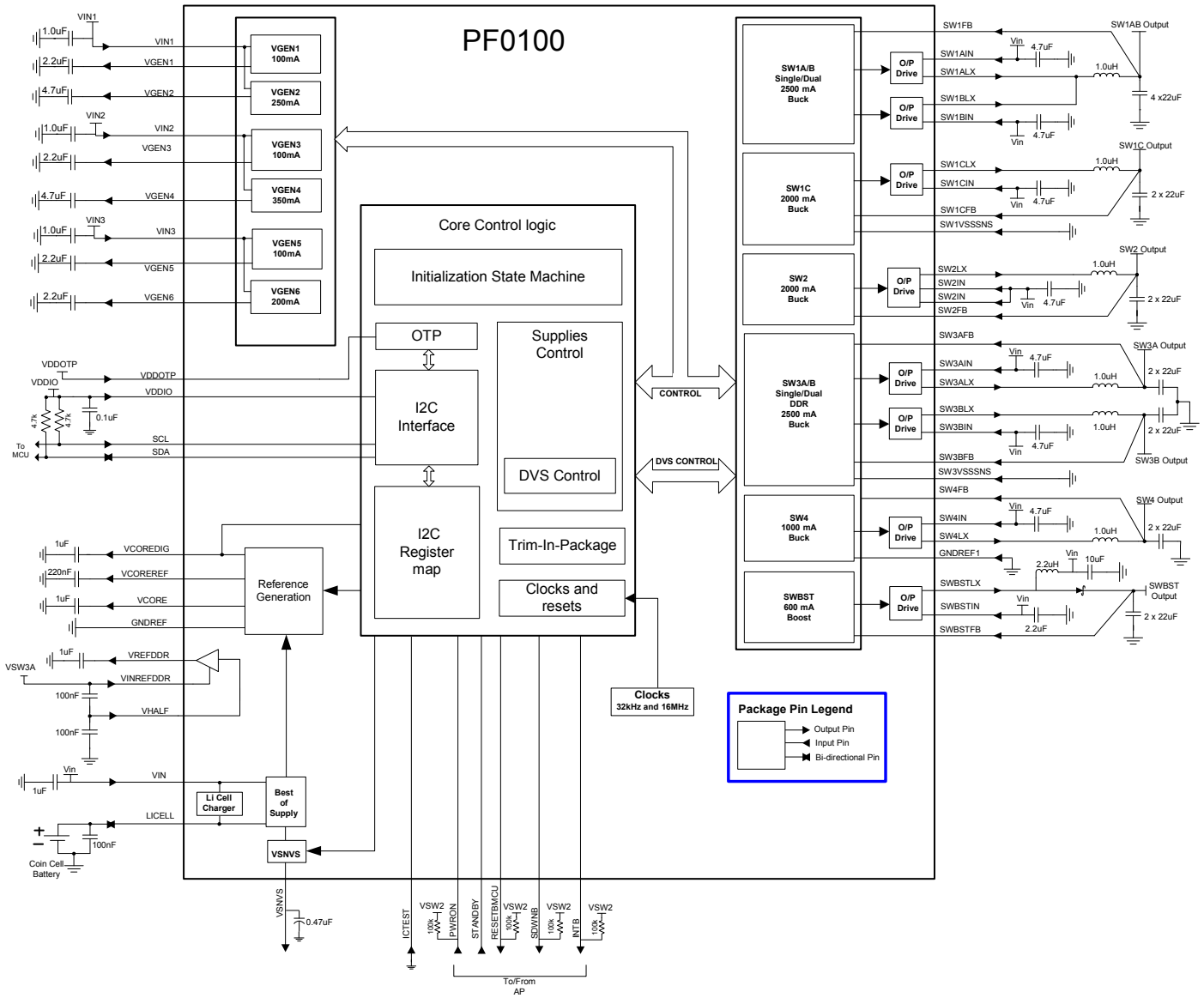

Figure 29. Typical application schematic

7.1.2 Bill of materials

The following table provides a complete list of the recommended components on a full featured system using the PF0100Z Device. Critical components such as inductors, transistors, and diodes are provided with a recommended part number, but equivalent components may be used.

Table 138. Bill of materials [82]

Value	Qty	Description	Part#	Manufacturer	Component/pin
PMIC					
	1	Power management IC	MMPF0100Z	NXP	
Buck, SW1AB - (0.300-1.875 V), 2.5 A					
1.0 µH	1	4 x 4 x 2.1 I_{SAT} = 4.5 A for 10% drop, DCR_{MAX} = 11.9 mΩ	XFL4020-102MEB	Coilcraft	Output inductor
1.0 µH	–	5 x 5 x 1.5 I_{SAT} = 3.6 A for 10% drop, DCR_{MAX} = 50 mΩ	LPS5015_102ML	Coilcraft	Output inductor optional
1.0 µH	–	2.5 x 2.0 x 1.2 I_{SAT} = 4.5 A DCR_{MAX} = 42 mΩ	DFE252012PD-1R0M	TOKO	Output inductor (optional)
22 µF	4	10 V X5R 0805	LMK212BJ226MG-T	Taiyo Yuden	Output capacitance
4.7 µF	2	10 V X5R 0603	LMK107BJ475KA-T	Taiyo Yuden	SW1AIN, SW1BIN
0.1 µF	1	10 V X5R 0402	C0402C104K8PAC	Kemet	Input capacitance
Buck, SW1C- (0.300-1.875 V), 2.0 A					
1.0 µH	1	4 x 4 x 1.2 I_{SAT} = 2.8 A for 10% drop, DCR_{MAX} = 60 mΩ	LPS4012-102NL	Coilcraft	Output inductor
1.0 µH	–	3 x 3 x1.2 I_{SAT} = 2.5 A for 10% drop, DCR_{MAX} = 42 mΩ	XFL3012-102ML	Coilcraft	Output inductor optional
1.0 µH	–	2.5 x 2.0 x 1.2 I_{SAT} = 4.5 A DCR_{MAX} = 42 mΩ	DFE252012PD-1R0M	TOKO	Output inductor (optional)
22 µF	2	10 V X5R 0805	LMK212BJ226MG-T	Taiyo Yuden	Output capacitance
4.7 µF	1	10 V X5R 0603	LMK107BJ475KA-T	Taiyo Yuden	Input capacitance
0.1 µF	1	10 V X5R 0402	C0402C104K8PAC	Kemet	Input capacitance
Buck, SW1ABC - (0.300-1.875 V), 4.5 A					
1.0 µH	1	4.2 x 4.2 x 2 I_{SAT} = 5.1 A for 10% drop, DCR_{MAX} = 29 mΩ	FDSD0420D-1R0M	TOKO Inc.	Output inductor
22 µF	6	10 V X5R 0805	LMK212BJ226MG-T	Taiyo Yuden	Output capacitance
4.7 µF	2	10 V X5R 0603	LMK107BJ475KA-T	Taiyo Yuden	Input capacitance
0.1 µF	1	10 V X5R 0402	C0402C104K8PAC	Kemet	Input capacitance

Table 138. Bill of materials [82] (continued)

Value	Qty	Description	Part#	Manufacturer	Component/pin
Buck, SW2 - (0.400-3.300 V), 2.0 A					
1.0 µH	1	4 x 4 x 1.2 I_{SAT} = 2.8 A for 10% drop, DCR_{MAX} = 60 mΩ	LPS4012-102NL	Coilcraft	Output inductor
1.0 µH	–	3x 3 x 1.2 I_{SAT} = 2.5 A for 10% drop, DCR_{MAX} = 42 mΩ	XFL3012-102ML	Coilcraft	Output inductor optional
1.0 µH	–	2.5 x 2.0 x 1.2 I_{SAT} = 4.5 A DCR_{MAX} = 42 mΩ	DFE252012PD-1R0M	TOKO	Output inductor (optional)
22 µF	2	10 V X5R 0805	LMK212BJ226MG-T	Taiyo Yuden	Output capacitance
4.7 µF	1	10 V X5R 0603	LMK107BJ475KA-T	Taiyo Yuden	Input capacitance
0.1 µF	1	10 V X5R 0402	C0402C104K8PAC	Kemet	Input capacitance
Buck, SW3AB - (0.400-3.300 V), 2.5 A					
1.0 µH	1	4 x 4 x 2.1 I_{SAT} = 4.5 A for 10% drop, DCR_{MAX} = 11.9 mΩ	XFL4020-102MEB	Coilcraft	Output inductor
1.0 µH	–	5 x 5 x 1.5 I_{SAT} = 3.6 A for 10% drop, DCR_{MAX} = 50 mΩ	LPS5015_102ML	Coilcraft	Output inductor optional
1.0 µH	–	2.5 x 2.0 x 1.2 I_{SAT} = 4.5 A DCR_{MAX} = 42 mΩ	DFE252012PD-1R0M	TOKO	Output inductor (optional)
22 µF	4	10 V X5R 0805	LMK212BJ226MG-T	Taiyo Yuden	Output capacitance
4.7 µF	2	10 V X5R 0603	LMK107BJ475KA-T	Taiyo Yuden	SW3AIN, SW3BIN
0.1 µF	1	10 V X5R 0402	C0402C104K8PAC	Kemet	Input capacitance
Buck, SW4 - (0.400-3.300V), 1A					
1.0 µH	1	2.5 x 2 x 1 I_{SAT} = 1.8 A for 30% drop, DCR_{MAX} = 84 mΩ	VLS252010ET-1R0N	TDK	Output inductor
1.0 µH	–	2.5 x 2.0 x 1.2 I_{SAT} = 4.5 A DCR_{MAX} = 42 mΩ	DFE252012PD-1R0M	TOKO	Output inductor (optional)
1.0 µH	-	2.2 x 2.1 x 1 I_{SAT} = 1.2 A for 10% drop, DCR_{MAX} = 89 mΩ	XPL2010_102ML	Coilcraft	Output inductor optional
22 µF	2	10 V X5R 0805	LMK212BJ226MG-T	Taiyo Yuden	Output capacitance
4.7 µF	1	10 V X5R 0603	LMK107BJ475KA-T	Taiyo Yuden	Input capacitance
0.1 µF	1	10 V X5R 0402	C0402C104K8PAC	Kemet	Input capacitance

Table 138. Bill of materials [82] (continued)

Value	Qty	Description	Part#	Manufacturer	Component/pin
BOOST, SWBST - 5.0 V, 600 mA					
2.2 µH	–	3 x 3 x 1.5 I_{SAT} = 2.0 A for 10% drop, DCR_{MAX} = 110 mΩ	LPS3015-222ML	Coilcraft	Output Inductor
2.2 µH	–	2.5 x 2.0 x 1.2 I_{SAT} = 3.3 A DCR_{MAX} = 84 mΩ	DFE252012PD-2R2M	TOKO	Output inductor (optional)
22 µF	2	10 V X5R 0805	LMK212BJ226MG-T	Taiyo Yuden	Output capacitance
10 µF	1	10 V X5R 0805	C2012X5R1A106MT	TDK	Input capacitance
2.2 µF	1	6.3 V X5R 0402	C0402C225M9PACTU	Kemet	Input capacitance
0.1 µF	1	10 V X5R 0402	C0402C104K8PAC	Kemet	Input capacitance
1.0 A	1	20 V SOD-123FL	MBR120VLSFT1G	ON Semiconductor	Schottky diode
LDO, VGEN1 - (0.80-1.55), 100 mA					
2.2 µF	1	6.3 V X5R 0402	C0402C225M9PACTU	Kemet	Output capacitance
1.0 µF	1	10 V X5R 0402	CC0402KRX5R6BB105	Yageo America	Input capacitance
LDO, VGEN2 - (0.80-1.55), 250 mA					
4.7 µF	1	6.3 V X5R 0402	C0402X5R6R3-475MNP	Venkel	Output capacitance
LDO, VGEN3 - (1.80-3.30), 100 mA					
2.2 µF	1	6.3 V X5R 0402	C0402C225M9PACTU	Kemet	Output capacitance
1.0 µF	1	10 V X5R 0402	CC0402KRX5R6BB105	Yageo America	Input capacitance
LDO, VGEN4 - (1.80-3.30), 350 mA					
4.7 µF	1	6.3 V X5R 0402	C0402X5R6R3-475MNP	Venkel	Output capacitance
LDO, VGEN5 - (1.80-3.30), 150 mA					
2.2 µF	1	6.3 V X5R 0402	C0402C225M9PACTU	Kemet	Output capacitance
1.0 µF	1	10 V X5R 0402	CC0402KRX5R6BB105	Yageo America	Input capacitance
LDO, VGEN6 - (1.80-3.30), 200 mA					
2.2 µF	1	6.3 V X5R 0402	C0402C225M9PACTU	Kemet	Output capacitance
LDO/Switch VSNVS - (1.1-3.3), 200 mA					
0.47 µF	1	6.3 V X5R 0402	C1005X5R0J474K	TDK	Output capacitance
Reference, VREFDDR - (0.20-1.65V), 10 mA					
1.0 µF	1	10 V X5R 0402	CC0402KRX5R6BB105	Yageo America	Output capacitance
0.1 µF	2	10 V X5R 0402	C0402C104K8PAC	Kemet	VHALF, VINREFDDR
Internal references, VCOREDIG, VCOREREF, VCORE					
1.0 µF	1	10 V X5R 0402	CC0402KRX5R6BB105	Yageo America	VCOREDIG
1.0 µF	1	10 V X5R 0402	CC0402KRX5R6BB105	Yageo America	VCORE
0.22 µF	1	10 V X5R 0402	GRM155R61A224KE19D	Murata	VCOREREF
Coin cell					
0.1 µF	1	10 V X5R 0402	C0402C104K8PAC	Kemet	LICELL

Table 138. Bill of materials [82] (continued)

Value	Qty	Description	Part#	Manufacturer	Component/pin
Miscellaneous					
0.1 µF	1	10 V X5R 0402	CD402C104K8PAC	Kemet	VDDIO
1.0 µF	1	10 V X5R 0402	CC0402KRX5R6BB105	Yageo America	VIN
100 kΩ	1	1/16 W 0402	RK73H1ETTP1003F	KOA SPEER	PWRON
100 kΩ	1	1/16 W 0402	RK73H1ETTP1003F	KOA SPEER	RESETBMCU
100 kΩ	1	1/16 W 0402	RK73H1ETTP1003F	KOA SPEER	SDWN
100 kΩ	1	1/16 W 0402	RK73H1ETTP1003F	KOA SPEER	INTB

Notes

82. NXP does not assume liability, endorse, or warrant components from external manufacturers referenced in circuit drawings or tables. While NXP offers component recommendations in this configuration, it is the customer's responsibility to validate their application.

7.2 PF0100Z layout guidelines

7.2.1 General board recommendations

1. It is recommended to use an eight layer board stack-up arranged as follows:
   - High current signal
   - GND
   - Signal
   - Power
   - Power
   - Signal
   - GND
   - High current signal
2. Allocate TOP and BOTTOM PCB Layers for POWER ROUTING (high current signals), copper-pour the unused area.
3. Use internal layers sandwiched between two GND planes for the SIGNAL routing.

7.2.2 Component placement

It is desirable to keep all component related to the power stage as close to the PMIC as possible, specially decoupling input and output capacitors.

7.2.3 General routing requirements

1. Some recommended things to keep in mind for manufacturability:
   - Via in pads require a 4.5 mil minimum annular ring. Pad must be 9.0 mils larger than the hole
   - Maximum copper thickness for lines less than 5.0 mils wide is 0.6 oz copper
   - Minimum allowed spacing between line and hole pad is 3.5 mils
   - Minimum allowed spacing between line and line is 3.0 mils
2. Care must be taken with SWxFB pins traces. These signals are susceptible to noise and must be routed far away from power, clock, or high power signals, like the ones on the SWxIN, SWx, SWxLX, SWBSTIN, SWBST, and SWBSTLX pins. They could be also shielded.
3. Shield feedback traces of the regulators and keep them as short as possible (trace them on the bottom so the ground and power planes shield these traces).
4. Avoid coupling traces between important signal/low noise supplies (like REFCORE, VCORE, VCOREDIG) from any switching node (i.e. SW1ALX, SW1BLX, SW1CLX, SW2LX, SW3ALX, SW3BLX, SW4LX, and SWBSTLX).
5. Make sure all components related to a specific block are referenced to the corresponding ground.

7.2.4 Parallel routing requirements

1. I^2C signal routing
   - CLK is the fastest signal of the system, so it must be given special care.
   - To avoid contamination of these delicate signals by nearby high power or high frequency signals, it is a good practice to shield them with ground planes placed on adjacent layers. Make sure the ground plane is uniform throughout the whole signal trace length.

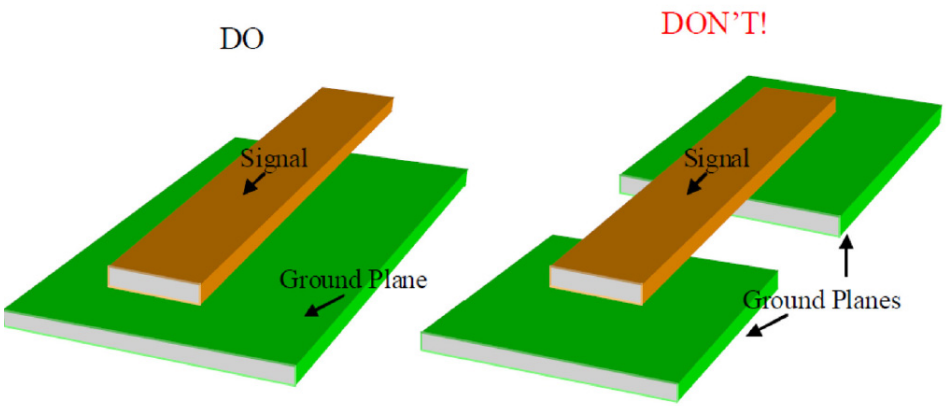

Figure 30. Recommended shielding for critical signals.

   - These signals can be placed on an outer layer of the board to reduce their capacitance with respect to the ground plane.
   - Care must be taken with these signals not to contaminate analog signals, as they are high frequency signals. Another good practice is to trace them perpendicularly on different layers, so there is a minimum area of proximity between signals.

7.2.5 Switching regulator layout recommendations

1. Per design, the switching regulators in PF0100Z are designed to operate with only one input bulk capacitor. However, it is recommended to add a high-frequency filter input capacitor (CIN_hf), to filter out any noise at the regulator input. This capacitor should be in the range of 100 nF and should be placed right next to or under the IC, closest to the IC pins.
2. Make high-current ripple traces low-inductance (short, high W/L ratio).
3. Make high-current traces wide or copper islands.
4. Make high-current traces symetrical for dual–phase regulators (SW1, SW3).

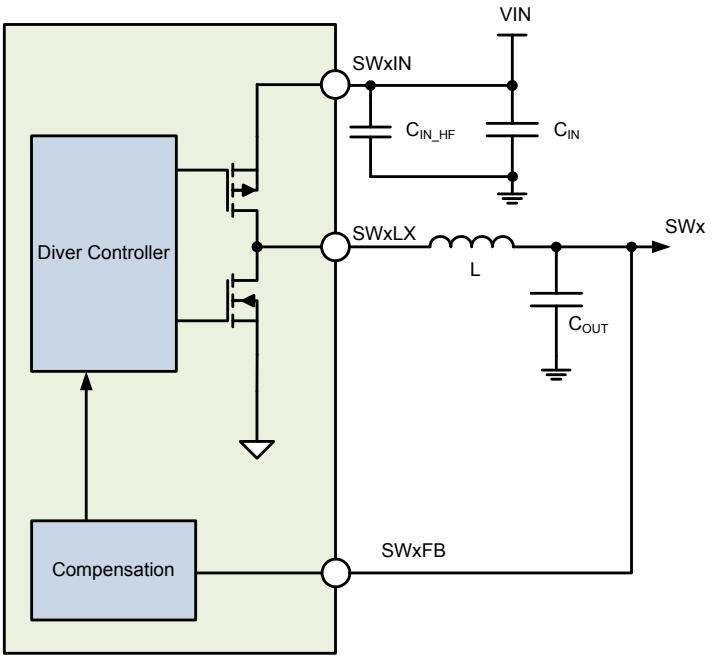

Figure 31. Generic buck regulator architecture

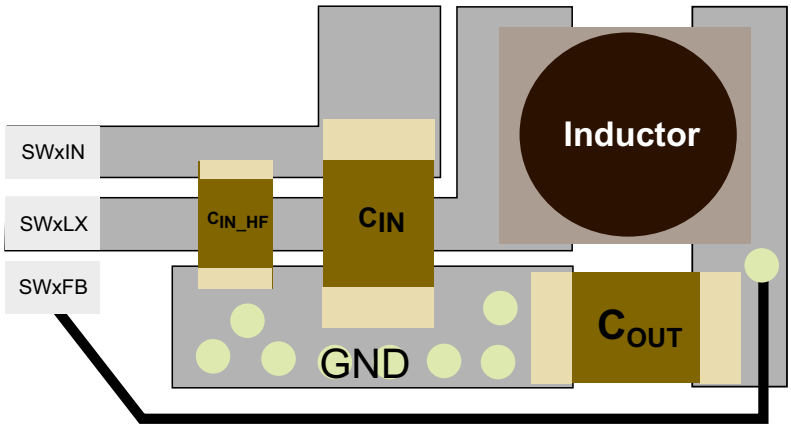

Figure 32. Recommended layout for buck regulators

7.3 Thermal information

7.3.1 Rating data

The thermal rating data of the packages has been simulated with the results listed in Table 5.

Junction to ambient thermal resistance nomenclature: the JEDEC specification reserves the symbol $R_{\theta JA}$ or θJA (Theta-JA) strictly for junction-to-ambient thermal resistance on a 1s test board in natural convection environment. $R_{\theta JMA}$ or θJMA (Theta-JMA) is used for both junction-to-ambient on a 2s2p test board in natural convection and for junction-to-ambient with forced convection on both 1s and 2s2p test boards. It is anticipated the generic name, Theta-JA, continues to be commonly used.

The JEDEC standards can be consulted at http://www.jedec.org.

7.3.2 Estimation of junction temperature

An estimation of the chip junction temperature T_J can be obtained from the equation:

$T_J = T_A + (R_{\theta JA} \times P_D)$

with:

T_A = Ambient temperature for the package in °C

$R_{\theta JA}$ = Junction to ambient thermal resistance in °C/W

P_D = Power dissipation in the package in W

The junction to ambient thermal resistance is an industry standard value provideing a quick and easy estimation of thermal performance. Unfortunately, there are two values in common usage: the value determined on a single layer board $R_{\theta JA}$ and the value obtained on a four layer board $R_{\theta JMA}$. Actual application PCBs show a performance close to the simulated four layer board value although this may be somewhat degraded in case of significant power dissipated by other components placed close to the device.

At a known board temperature, the junction temperature T_J is estimated using the following equation

$T_J = T_B + (R_{\theta JB} \times P_D)$ with

T_B = Board temperature at the package perimeter in °C

$R_{\theta JB}$ = Junction to board thermal resistance in °C/W

P_D = Power dissipation in the package in W

When the heat loss from the package case to the air can be ignored, acceptable predictions of junction temperature can be made.

See 6 Functional block requirements and behaviors, page 17 for more details on thermal management.

8 Packaging

8.1 Packaging dimensions

Package dimensions are provided in package drawings. To find the most current package outline drawing, go to www.nxp.com and perform a keyword search for the drawing's document number. See the 4.2 Thermal characteristics, page 10 for specific thermal characteristics for each package.

Table 139. Package drawing information

Package	Suffix	Package outline drawing number
56 QFN 8x8 mm - 0.5 mm pitch. WF-Type (wettable flank)	ES	98ASA00589D

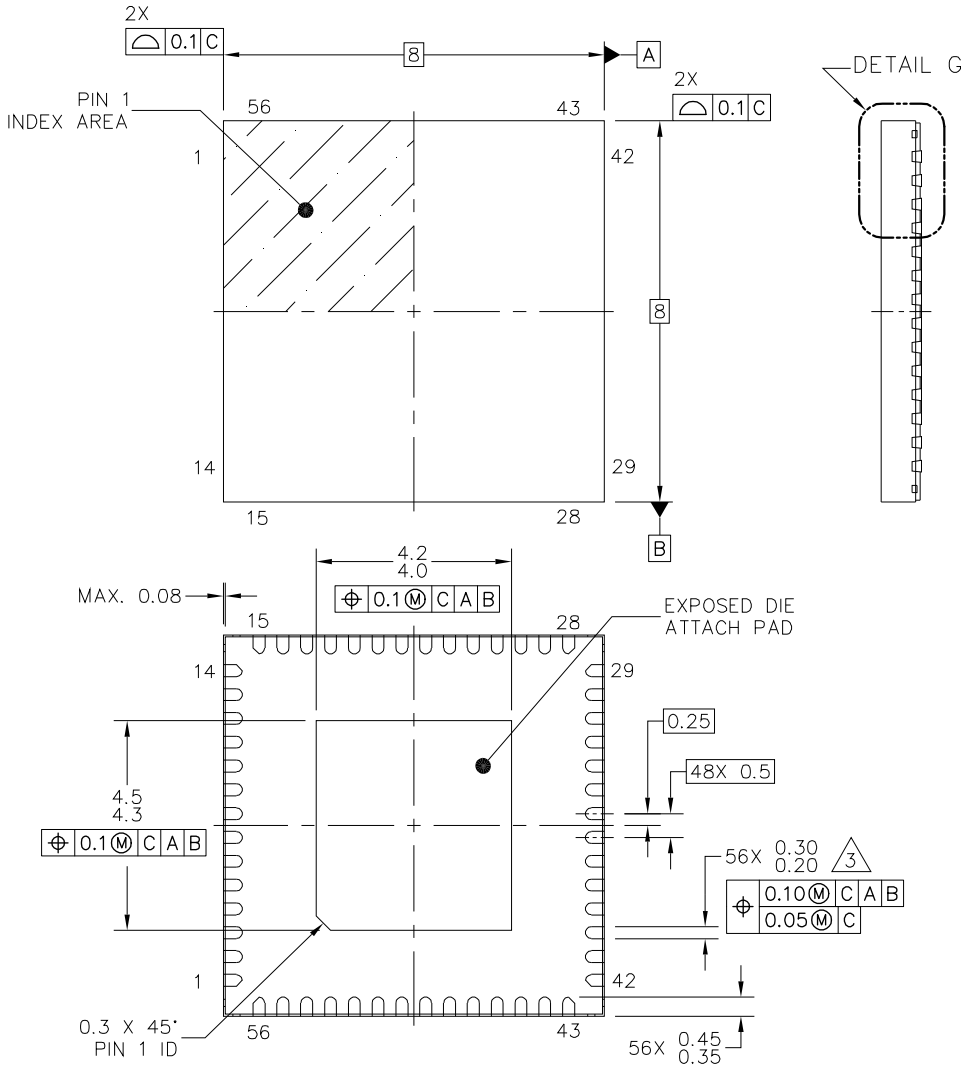

© NXP SEMICONDUCTORS N.V. ALL RIGHTS RESERVED	MECHANICAL OUTLINE	PRINT VERSION NOT TO SCALE
TITLE: QFN, THERMALLY ENHANCED 8 X 8 X 0.85, 0.5 PITCH, 56 TERMINAL	DOCUMENT NO: 98ASA00589D	REV: C
	STANDARD: NON-JEDEC	
	SOT684-18	19 APR 2016

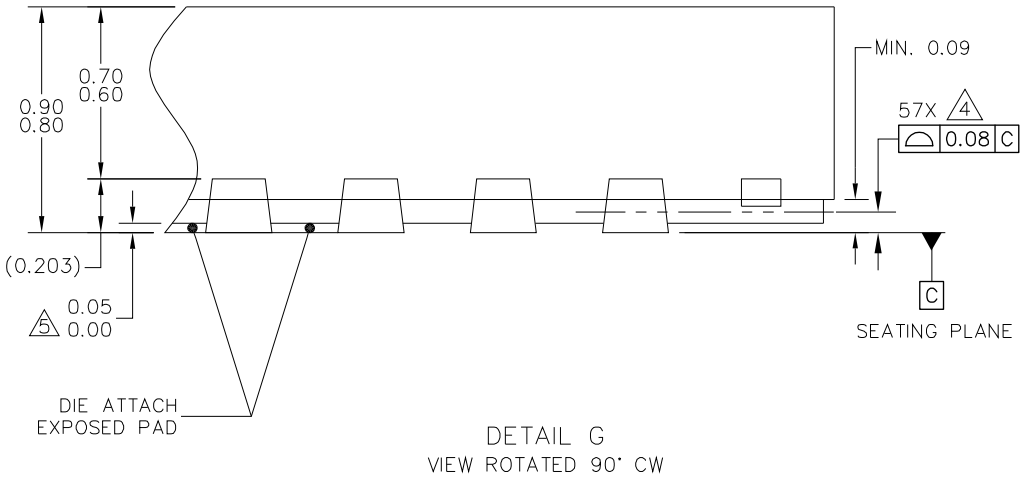

© NXP SEMICONDUCTORS N.V. ALL RIGHTS RESERVED	MECHANICAL OUTLINE	PRINT VERSION NOT TO SCALE
TITLE: QFN, THERMALLY ENHANCED 8 X 8 X 0.85, 0.5 PITCH, 56 TERMINAL	DOCUMENT NO: 98ASA00589D	REV: C
	STANDARD: NON-JEDEC	
	SOT684-18	19 APR 2016

NOTES:

1. ALL DIMENSIONS ARE IN MILLIMETERS.
2. DIMENSIONING AND TOLERANCING PER ASME Y14.5M–2009.
3. THIS DIMENSION APPLIES TO METALIZED TERMINAL AND IS MEASURED BETWEEN 0.15 AND 0.30MM FROM TERMINAL TIP.
4. BILATERAL COPLANARITY ZONE APPLIES TO THE EXPOSED PAD AS WELL AS THE TERMINALS.
5. THIS DIMENSION APPLIES ONLY FOR TERMINALS.

© NXP SEMICONDUCTORS N.V. ALL RIGHTS RESERVED	MECHANICAL OUTLINE	PRINT VERSION NOT TO SCALE
TITLE: QFN, THERMALLY ENHANCED 8 X 8 X 0.85, 0.5 PITCH, 56 TERMINAL	DOCUMENT NO: 98ASA00589D	REV: C
	STANDARD: NON–JEDEC	
	SOT684–18	19 APR 2016

9 Reference section

9.1 Reference documents

Table 140. PF0100Z reference documents

Reference	Description
AN4536	MMPF0100 OTP Programming Instructions
AN4622	MMPF0100 Layout Guidelines

10 Revision history

10.1 Document changes

Revision	Date	Description of Changes
1.0	11/2012	• Initial release
2.0	1/2013	• Deleted unneeded rows from Ordering information and updated part number • Changed Note 2 • Added Note 4 to Pin Definitions and assigned it to the applicable pin names • Corrected Functional Block diagram • Corrected pin name in section 7.1 • Deleted unnecessary columns in Table 9 • Added section 7.2.1 and fixed TOC • Corrected FF row in Table 136 • Corrected schematics 10, 11, 12, 14, 16, 17, 18, 20, and 22 • Corrected page one package isometric • Added warning to note 6 • Changed graphics on figures 13, 15, 19, and 21 • Deleted original note 64. • Deleted reference to ICOINLO in Coin Cell Charger Control • Updated figure 28 • Corrected part number in BOM • Corrected #4 in General Routing Requirements • Added AN4622 to Reference Documents
3.0	2/2013	• Separated VSNS pin for HBM page 9 • Reworded sentence in Programming OTP fuses • Added 2.0 MHz clock frequency • Changed min. for VREFDDR Current Limit • Changed min. for VGEN1 DC Current Limit • Changed min. for VGEN1 DC Overcurrent Protection Threshold • Changed max. for VGEN2 ACTIVE MODE - DC Current Limit • Changed min. for VGEN3 DC Current Limit • Changed min. for VGEN4 DC Current Limit • Changed min. for VGEN5 ACTIVE MODE - DC Current Limit • Changed min. for VGEN6 DC Current Limit • Changed min. for VGEN6 DC Overcurrent Protection Threshold • Changed max. for VSNVS DC, LDO V_{IN} Threshold, V_{IN} going high with valid coin cell • Changed max. for VSNVS DC, LDO V_{IN} Threshold, V_{IN} going low with valid coin cell • Added note to VSNVS AC AND TRANSIENT Turn-on Time, and deleted notation of conditions • Register D8 and D9 in table 137 marked as reserved. • Added Figure 4 • Updated table 8. Current consumption summary.

Revision	Date	Description of Changes
4.0	4/2014	• Added new package name and drawing for PF0100AZ • Added Table 2 listing differences between PF0100Z and PF0100AZ • Corrected VDDOTP maximum rating • Corrected SWBSTFB maximum rating • Updated Table 8 to included PF0100AZ specifications • Updated Figure 4 • Added note of FUSE_POR-XOR bit for PF0100AZ in OTP prototyping • Corrected 2.0 MHz clock minimum specification from 1.85 MHz to 1.84 MHz in 16 MHz and 32 kHz clocks • Corrected inductor Isat for SW1ABC single phase mode from 4.5 A to 6.0 A • Tightened accuracy specification in PFM mode for all the switching regulators • Corrected typical efficiency specifications for all switching regulators • Added note to clarify SWBST default operation in Auto mode • Added current limit specifications for VGEN2, VGEN6, and VSNVS for PF0100AZ • Corrected conditions for VSNVS turn-on time specifications • Changed VTH1 maximum specification from 3.05 V to 3.1 V • Updated Control interface I2C block description to include note about SCL/SDA drive strength • Corrected default values of bits in INTMASK0 register in Table 118 • Corrected default value of 4 MSBs in Table 128 • Corrected default value of bits in SILICONREVID register in Table 126 • Updated Typical Application Schematic to add bypass capacitor on VDDIO pin • Added capacitor at VDDIO pin in Bill of Material table • Noted that voltage settings 0.6 V and below are not supported • VSNVS Turn On Delay (td1) spec corrected from 15 ms to 5.0 ms • Updated per GPCN 16220
5.0	10/2014	• Updated as per PB 16482 • Increased ambient operating temperature of MMPF0100NPAZES device • Added additional specification line items for Standby current, Sleep current, and VREFDDR accuracy for the extended temperature operation • Added new part number MMPF0100F8AZES • Updated Table 9
6.0	11/2014	• Corrected the temperature range for the device MMPF0100F8AZES in Table 1 • Updated Table 23 • Updated Bill of Materials Table 138
7.0	7/2015	• Added new part numbers MMPF0100F9AZES and MMPF0100FAAZES to Table 1 • Updated Table 9
8.0	10/2015	• Added MMPF0100F0AZES to Table 1 • Updated Table 9 • Updated Table 52 • Updated Table 137
	10/2015	• Fixed typo on page 1
9.0	12/2015	• Removed MMPF0100NPZES from Orderable part variations. No longer manufactured. • Added MMPF0100F6AZES to Orderable part variations • Updated Table 9 for MMPF0100F6AZES
10.0	3/2016	• Updated SW2 current capability from 2000 mA to 2500 mA for F9/FA versions
11.0	5/2016	• Changed Table 9 row - Default I^2C Address from 0x80 to 0x08 for F0, F9, and FA
12.0	8/2016	• Added NP version to OTP's with SW2 current capability of 2500 mA • Added BOM for SW1ABC

How to Reach Us:

Home Page:
NXP.com

Web Support:
http://www.nxp.com/support

Information in this document is provided solely to enable system and software implementers to use NXP products. There are no expressed or implied copyright licenses granted hereunder to design or fabricate any integrated circuits based on the information in this document. NXP reserves the right to make changes without further notice to any products herein.

NXP makes no warranty, representation, or guarantee regarding the suitability of its products for any particular purpose, nor does NXP assume any liability arising out of the application or use of any product or circuit, and specifically disclaims any and all liability, including without limitation, consequential or incidental damages. "Typical" parameters that may be provided in NXP data sheets and/or specifications can and do vary in different applications, and actual performance may vary over time. All operating parameters, including "typicals," must be validated for each customer application by the customer's technical experts. NXP does not convey any license under its patent rights nor the rights of others. NXP sells products pursuant to standard terms and conditions of sale, which can be found at the following address:

http://www.nxp.com/terms-of-use.html.

NXP, the NXP logo, Freescale, the Freescale logo and SMARTMOS are trademarks of NXP B.V. All other product or service names are the property of their respective owners. All rights reserved.

© 2016 NXP B.V.

Document Number: MMPF0100Z
Rev. 12.0
8/2016