SHEET 1 OF 1

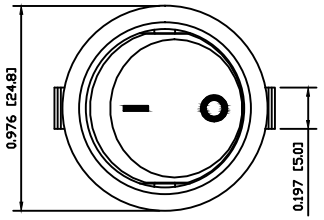

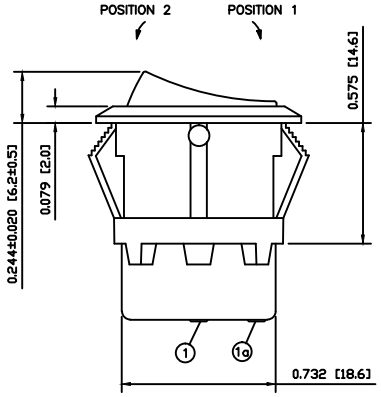

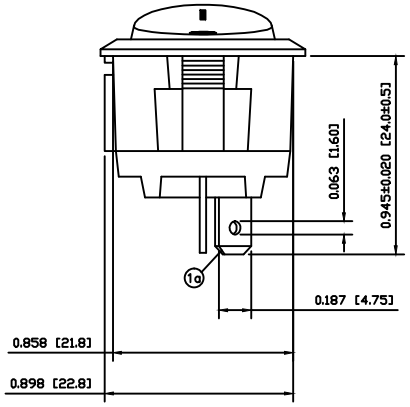

SCHEMATIC

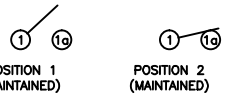

SPECIFICATIONS

FUNCTION:
1P1T OFF–ON

RATINGS:
ANSI/UL 1054 and CAN/CSA C22.2 No. 55 (E194579):
15A 125VAC [UR, cUR]
10A 250VAC [UR, cUR]
1/3HP 125/250VAC [UR, cUR]

CONTACT RESISTANCE:
Initial: 35mΩ Max. at 50VAC

INSULATION RESISTANCE:
100MΩ Min. at 500VDC

DIELECTRIC STRENGTH:
1,500VAC For 1 Minute

ELECTRICAL LIFE:
6,000 Cycles [UR, cUR]

TEMPERATURE:
Operating: –20°C to 105°C [UR, cUR]

APPROVALS:
RoHS COMPLIANT

COLORS AND MARKINGS

BODY:
Black

ACTUATOR:
Black

MARKING:
I/O Vertical (1)

MARKING COLOR:
White

MATERIALS

BODY:
Polyamide 6/6 (PA66), UL94 V–2

ACTUATOR:
Polyamide 6/6 (PA66), UL94 V–2

SPRINGS:
Music Wire

PLUNGER:
Polyamide 6/6 (PA66), UL94 V–2

MOBILE CONTACT:
Silver Plated Copper

CONTACTS:
Silver Alloy Clad Copper

TERMINALS:
Silver Plated Brass
Silver Plated Copper

SUGGESTED PANEL CUTOUT

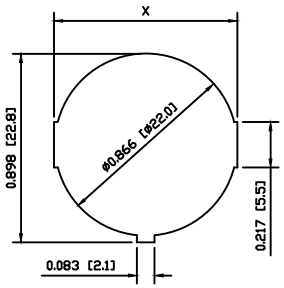

PANEL THICKNESS	X
0.030~0.049 [0.75~1.25]	0.874 [22.2]
0.049~0.079 [1.25~2.00]	0.882 [22.4]
0.079~0.118 [2.00~3.00]	0.890 [22.6]

REFERANCE	REV.	DATE	BY
ACTUATOR	A	09/08/12	CAB
BODY	–	10/14/15	MW
COLORS	A	09/08/12	CAB
MATERIALS	A	09/08/12	CAB
SPECIFICATIONS	A	09/08/12	CAB

THE INFORMATION CONTAINED IN THIS DOCUMENT IS PROPRIETARY TO E–SWITCH–LAMB INDUSTRIES AND IS NOT TO BE COPIED OR TRANSFERRED

REV.	DESCRIPTION	PCR	DATE	DRAWN BY
A	INITIAL RELEASE	PCR22022	10/14/15	MW

DIMENSIONS: INCHES [MILLIMETERS]
GENERAL TOLERANCES: ±0.008 [±0.2] / ±1°
SCALE: DRAWING NOT TO SCALE
PROJECTION

E◆SWITCH®

RRA11C1121

DRAWING NUMBER	DATE	REVISION
38–RRA11C1121	10/14/2015	A