THIS DRAWING IS UNPUBLISHED. RELEASED FOR PUBLICATION -,- .
© COPYRIGHT - By - ALL RIGHTS RESERVED.

LOC	DIST
AF	50

REVISIONS

P	LTR	DESCRIPTION	DATE	DWN	APVD
	AB	REVISED PER ECR-13-011489	07DEC2013	KH	PD

1 SUPPLIED IN LOOSE PIECE.

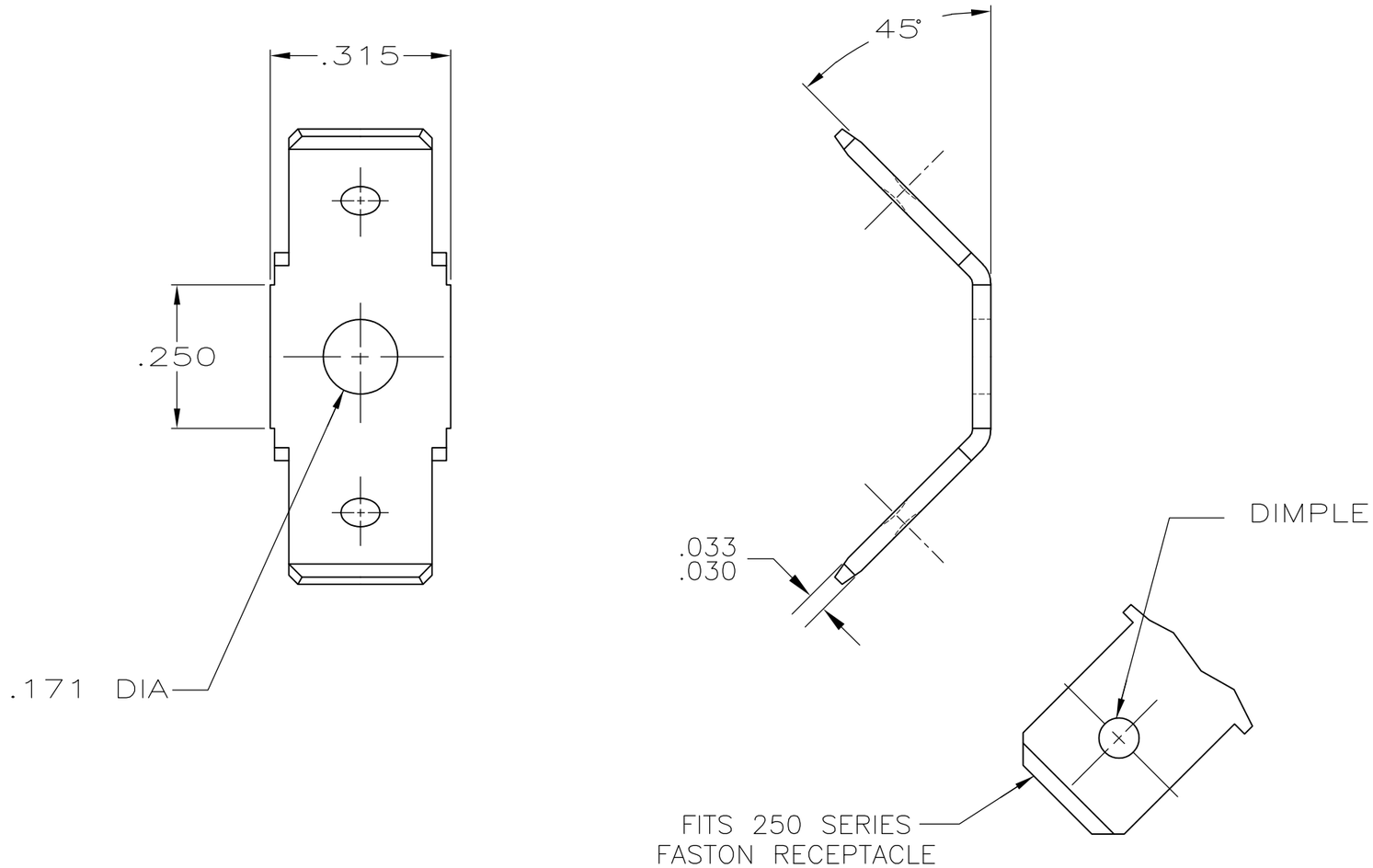

FINISH	PART NUMBER
–	–
–	41616

THIS DRAWING IS A CONTROLLED DOCUMENT.

DIMENSIONS: INCHES

TOLERANCES UNLESS OTHERWISE SPECIFIED:

0 PLC	± –
1 PLC	± –
2 PLC	± –
3 PLC	± .010
4 PLC	± –
ANGLES	± –

MATERIAL: BRASS

FINISH: SEE TABLE

DWN MICHAEL S. FEHER 26SEP2002
CHK NATHAN DEIBERT 26SEP2002
APVD NATHAN DEIBERT 26SEP2002
PRODUCT SPEC —
APPLICATION SPEC —
WEIGHT —

CUSTOMER DRAWING

TE Connectivity

NAME: TAB, FASTON, LOOSE PIECE, .250 SERIES

SIZE	CAGE CODE	DRAWING NO	RESTRICTED TO
A3	00779	C-41616	—

SCALE	SHEET	REV
4:1	1 OF 1	AB