molex
one company › a world of innovation

This document was generated on 06/01/2010

PLEASE CHECK WWW.MOLEX.COM FOR LATEST PART INFORMATION

Part Number: 0355070602

Status: Active

Overview: sherlock

Description: 2.00mm (.079") Pitch Sherlock™ Wire-to-Board Housing, Red, 6 Circuits

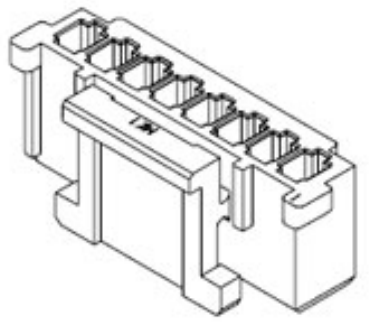

Series

image - Reference only

Documents:

3D Model
Drawing (PDF)
Product Specification PS-35507-001 (PDF)
Product Specification PS-35507-002 (PDF)
RoHS Certificate of Compliance (PDF)

Agency Certification

CSA	LR19980
UL	E29179

General

Product Family	Crimp Housings
Series	35507
Overview	sherlock
Product Name	Sherlock™

Physical

Circuits (maximum)	6
Circuits Detail	6
Color - Resin	Red
Flammability	94V-0
Gender	Female
Glow-Wire Compliant	No
Keying to Mating Part	None
Lock to Mating Part	Yes
Material - Resin	Polyester
Number of Rows	1
Packaging Type	Bag
Panel Mount	No
Pitch - Mating Interface (in)	0.079 In
Pitch - Mating Interface (mm)	2.00 mm
Polarized to Mating Part	Yes
Stackable	No
Temperature Range - Operating	-40°C to +105°C

Electrical

Current - Maximum per Contact	2A

Material Info

Reference - Drawing Numbers

Product Specification	PS-35507-001, PS-35507-002, RPS-35507-003, RPS-35507-004, RPS-35507-005, RPS-35507-009, RPS-35507-010, RPS-35507-011
Sales Drawing	SD-35507-001

EU RoHS
ELV and RoHS Compliant
REACH SVHC
Not Reviewed
Halogen-Free Status
Not Reviewed

China RoHS

Need more information on product environmental compliance?

Email productcompliance@molex.com
For a multiple part number RoHS Certificate of Compliance, click here

Please visit the Contact Us section for any non-product compliance questions.

Search Parts in this Series
35507Series

Mates With
Sherlock™ Wire-to-Board Header 35362 , 35363

Use With
2.00mm (.079") Pitch Crimp Terminal 50212 , 10440

This document was generated on 06/01/2010

PLEASE CHECK WWW.MOLEX.COM FOR LATEST PART INFORMATION

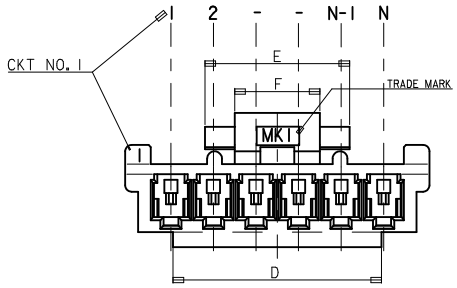

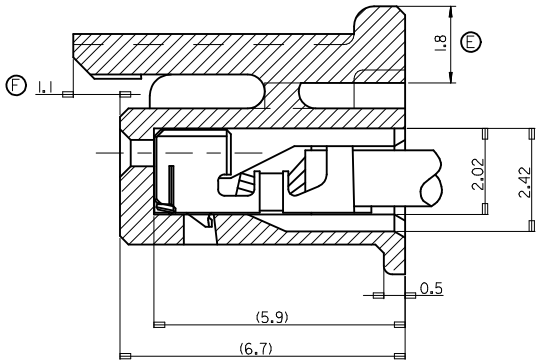

TERMINAL INSERTED DRAWING
SCALE 2:1

ISOMETRIC VIEW

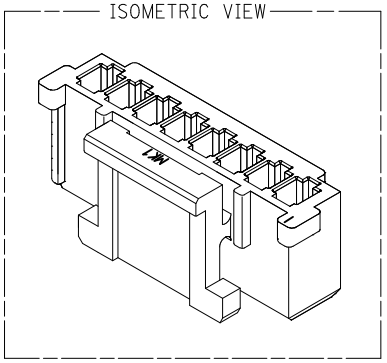

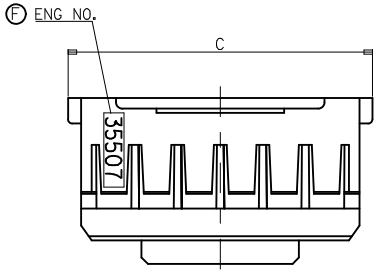

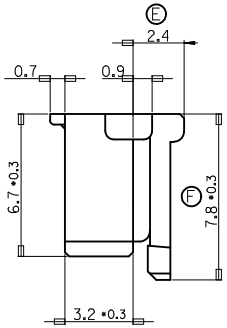

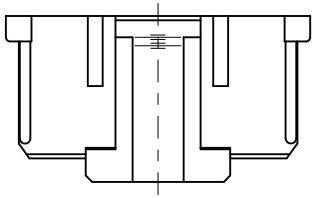

NOTES

1. MATERIAL : POLYESTER, UL94V-0
2. (F) FINISH : VARIABLE COLOR (SEE LEGEND)
3. PRODUCT SPECIFICATION NO : PS-35507-001
4. APPLICABLE TERMINAL : 50212-8000
5. MATES WITH : 35362-**1*, 35363-**1*

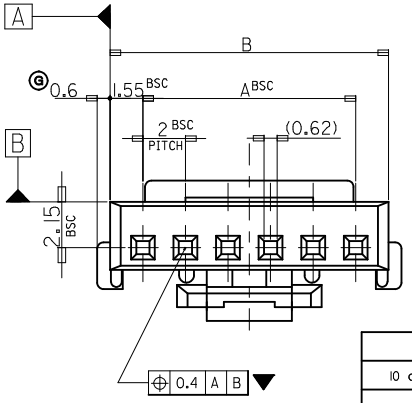

(C) LEGEND

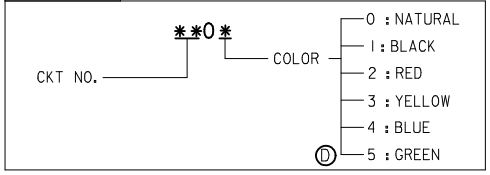

F	E	D	C	B	A	ENG NO.	CKT
4	4	27.8	32.3	31.1	28	-150*	15
		25.8	30.3	29.1	26	-140*	14
		23.8	28.3	27.1	24	-130*	13
		21.8	26.3	25.1	22	-120*	12
		19.8	24.3	23.1	20	-110*	11
		17.8	22.3	21.1	18	-100*	10
7	7	15.8	20.3	19.1	16	-090*	9
8.0	10.8	13.8	18.3	17.1	14	-080*	8
4	4	11.8	16.3	15.1	12	-070*	7
		9.8	14.3	13.1	10	-060*	6
		7.8	12.3	11.1	8	-050*	5
4.0	G 6.4	5.8	10.3	9.1	6	35507-040*	4

30 over	±0.3
10 over 30 under	±0.25
10 under	±0.2
ANGLE	±3°
GENERAL TOLERANCE	

REV	DESCRIPTION		
G	REVISED	EC NO: KOR2008-0029	2009/12/18
		DRWN: JHLEE05	2009/12/18
		CH'KD: KSKIM	2009/12/18
		APPR: YUNSIKKIM	2009/12/21

QUALITY SYMBOLS
▼=1
(C)▽=0

GENERAL TOLERANCES (UNLESS SPECIFIED)

	mm	INCH
4 PLACES	± ---	± ---
3 PLACES	± ---	± ---
2 PLACES	± ---	± ---
1 PLACE	± ---	± ---
ANGULAR ±---°		

DRAFT WHERE APPLICABLE MUST REMAIN WITHIN DIMENSIONS

DIMENSION STYLE: MM ONLY	SCALE: 1:1	DESIGN UNITS: METRIC	THIRD ANGLE PROJECTION
DRAWN BY: YSKIM02	DATE: 1996/09/11	TITLE: 2.0 W-T-B CONN HOUSING 4-15P ONLY	
CHECKED BY: YSKIM04	DATE: 1996/09/11		
APPROVED BY: CWLEE	DATE: 1996/09/12	molex MOLEX INCORPORATED	
MATERIAL NO.: SEE TABLE		DOCUMENT NO.: SD-35507-001	SHEET NO.: 1 OF 3
SIZE: A3	THIS DRAWING CONTAINS INFORMATION THAT IS PROPRIETARY TO MOLEX INCORPORATED AND SHOULD NOT BE USED WITHOUT WRITTEN PERMISSION		

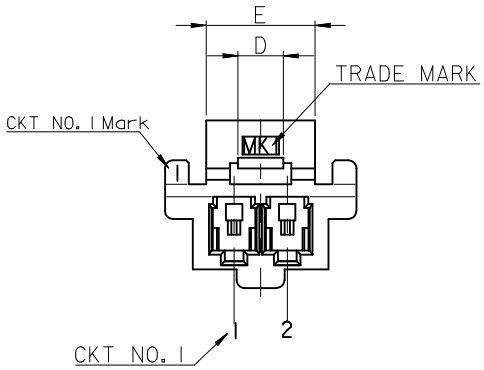

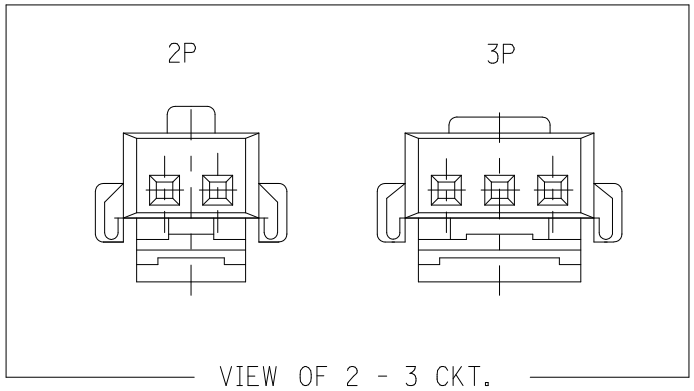

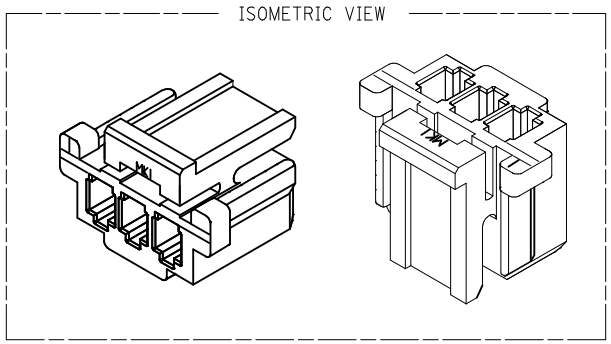

FOR 2 & 3 CKTS.

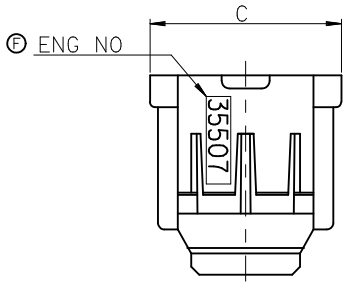

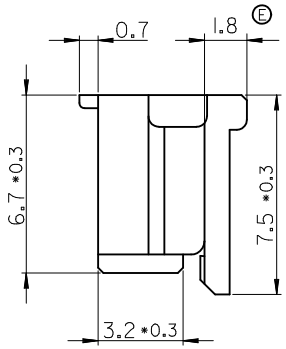

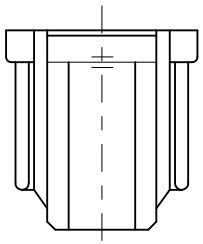

Ⓒ LEGEND

CKT NO. — **0* — COLOR
- 0 : NATURAL
- 1 : BLACK
- 2 : RED
- 3 : YELLOW
- 4 : BLUE
- Ⓓ 5 : GREEN

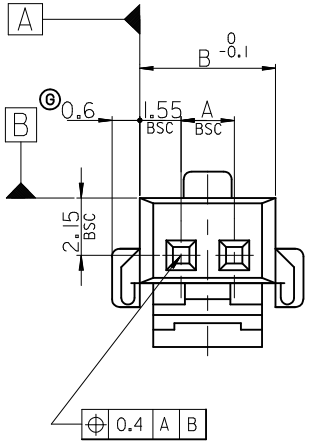

NOTES

1. MATERIAL : POLYESTER, UL94V-0
2. FINISH : VARIABLE COLOR (SEE LEGEND)
3. PRODUCT SPECIFICATION NO : PS-35507-001
4. APPLICABLE TERMINAL : 50212-8000
5. MATES WITH : 35362-**1*, 35363-**1*

2.5	9.2	7.1	4	-030*	3
1.7	7.2	5.1	2	35507-020*	2
D	C	B	A	ENG NO.	CKT

30 over	*0.3
10 over 30 under	±0.25
10 under	±0.2
ANGLE	±3°
GENERAL TOLERANCE	

REVISED
EC NO: KOR2008-0029 2009/12/18
DRWN: JHLEE05 2009/12/18
CH'KD: KSKIM
APPR: YUNSIKKIM 2009/12/21
DESCRIPTION
G
REV

QUALITY SYMBOLS
▼=0
Ⓒ▽=0

GENERAL TOLERANCES (UNLESS SPECIFIED)

	mm	INCH
4 PLACES	± ---	± ---
3 PLACES	± ---	± ---
2 PLACES	± ---	± ---
1 PLACE	± ---	± ---
ANGULAR ±---°		

DRAFT WHERE APPLICABLE MUST REMAIN WITHIN DIMENSIONS

DIMENSION STYLE: MM ONLY	SCALE: 1:1	DESIGN UNITS: METRIC	THIRD ANGLE PROJECTION
DRAWN BY: YSKIM02	DATE: 1996/09/11	TITLE: 2.0 W-T-B CONN HOUSING 2 TO 3P ONLY	
CHECKED BY: YSKIM04	DATE: 1996/09/11		
APPROVED BY: CWLEE	DATE: 1996/09/11	MOLEX INCORPORATED	
MATERIAL NO.: SEE TABLE		DOCUMENT NO.: SD-35507-001	SHEET NO.: 2 OF 3
SIZE: A3			

THIS DRAWING CONTAINS INFORMATION THAT IS PROPRIETARY TO MOLEX INCORPORATED AND SHOULD NOT BE USED WITHOUT WRITTEN PERMISSION

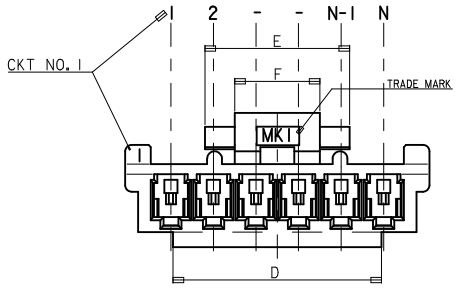

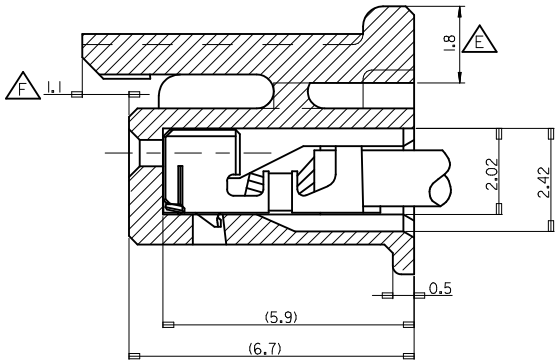

TERMINAL INSERTED DRAWING
SCALE 8:1

ISOMETRIC VIEW

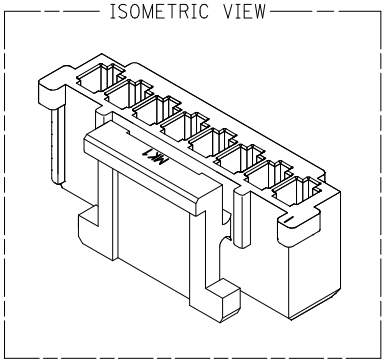

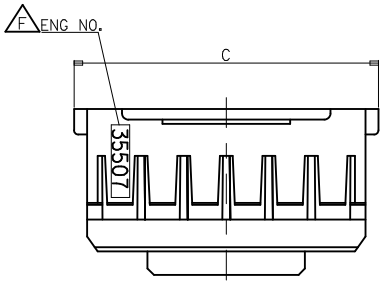

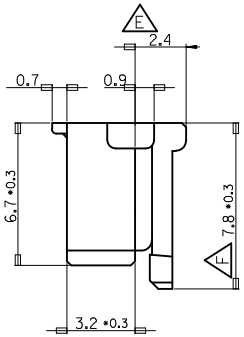

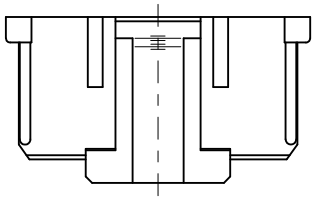

NOTES

1. MATERIAL : POLYESTER, NON GLASS FILLED, UL94V-0
2. FINISH : VARIABLE COLOR (SEE LEGEND)
3. PRODUCT SPECIFICATION : PS-35507-001
4. APPLICABLE TERMINAL : 50212-8000
5. MATES WITH : 35362-**1*, 35363-**1*

C LEGEND

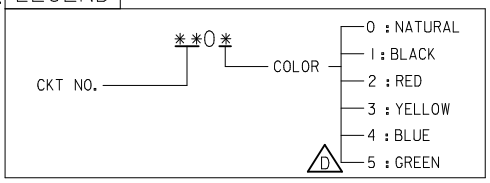

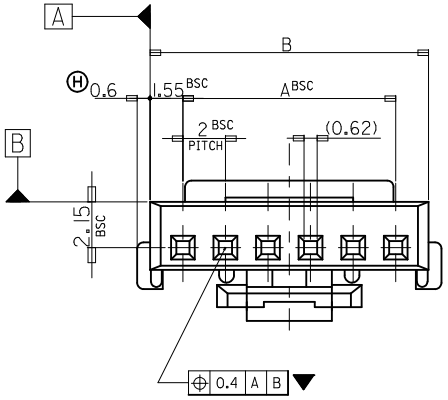

	F	E	D	C	B	A	MATERIAL NO.	ENG NO.	CKT
G	8.0	10.8	37.8	42.3	41.1	38	35507200*	35507-200*	20
G	8.0	10.8	35.8	40.3	39.1	36	35507190*	35507-190*	19
G	8.0	10.8	33.8	38.3	37.1	34	35507180*	35507-180*	18
G	8.0	10.8	31.8	36.3	35.1	32	35507170*	35507-170*	17
G	8.0	10.8	29.8	34.3	33.1	30	35507160*	35507-160*	16

REVISED
EC NO: KOR2008-0029 2009/12/18
DRWN: JHLEE05 2009/12/18
CH'KD: KSKIM 2009/12/21
APPR: YUNSIKKIM
DESCRIPTION
REV H

QUALITY SYMBOLS
▼=0
C =0

GENERAL TOLERANCES (UNLESS SPECIFIED)

	mm	INCH
4 PLACES	± ---	± ---
3 PLACES	± ---	± ---
2 PLACES	± ---	± ---
1 PLACE	± ---	± ---
ANGULAR ±---°		

DRAFT WHERE APPLICABLE MUST REMAIN WITHIN DIMENSIONS

DIMENSION STYLE: MM ONLY
SCALE: 1:1
DESIGN UNITS: METRIC
THIRD ANGLE PROJECTION

DRAWN BY: YSKIM02 DATE: 1996/09/11
CHECKED BY: YSKIM04 DATE: 1996/09/11
APPROVED BY: CWLEE DATE: 1996/09/11

TITLE: 2.0 W-T-B CONN HOUSING

molex MOLEX INCORPORATED

MATERIAL NO.: SEE TABLE
DOCUMENT NO.: SD-35507-001
SHEET NO.: 3 OF 3
SIZE: A3

THIS DRAWING CONTAINS INFORMATION THAT IS PROPRIETARY TO MOLEX INCORPORATED AND SHOULD NOT BE USED WITHOUT WRITTEN PERMISSION