LM8333 Mobile I/O Companion Supporting Key-Scan, I/O Expansion, PWM, and ACCESS.bus Host Interface

Check for Samples: LM8333

FEATURES

- **8 × 8 Standard Keys**
- **8 Special Function Keys (SF Keys) Providing a Total of 72 Keys for the Maximum Keyboard Matrix**
- **ACCESS.Bus (I^2C-compatible) Communication Interface to the Host**
- **Four General Purpose Host Programmable I/O Pins with Two Optional (Slow) External Interrupts**
- **15-byte FIFO Buffer to Store Key Pressed and Key Released Events**
- **Error Control with Error Reports on (FIFO Overrun, Keypad Overrun, Invalid Command)**
- **Host Programmable PWM**
- **Host Programmable Active Time and Debounce Time**

APPLICATIONS

- **Mobile Phones**
- **Personal Digital Assistants (PDAs)**
- **Smart Handheld Devices**
- **Personal Media Players**

DESCRIPTION

The LM8333 Mobile I/O Companion offloads the burden of keyboard scanning from the host, while providing extremely low power consumption in both operational and standby modes. It supports keypad matrices up to 8 × 8 in size (plus another 8 special-function keys), for portable applications such as cellphones, PDAs, games, and other handheld applications.

Key press and release events are encoded into a byte format and loaded into a FIFO buffer for retrieval by the host processor. An interrupt output (IRQ) is used to signal events such as keypad activity, a state change on either of two interrupt-capable general-purpose I/O pins, or an error condition. Interrupt and error codes are available to the host by reading dedicated registers.

Four general-purpose I/O pins are available, two of which have interrupt capability. A pulse-width modulated output based on a host-programmable internal timer is also available, which can be used as a general-purpose output if the PWM function is not required.

To minimize power, the LM8333 automatically enters a low-power standby mode when there is no keypad, I/O, or host activity.

The device is packaged in a 32–pin WQFN and a 49-pin csBGA. Both are chip-scale packages.

Please be aware that an important notice concerning availability, standard warranty, and use in critical applications of Texas Instruments semiconductor products and disclaimers thereto appears at the end of this data sheet.

All trademarks are the property of their respective owners.

PRODUCTION DATA information is current as of publication date. Products conform to specifications per the terms of the Texas Instruments standard warranty. Production processing does not necessarily include testing of all parameters.

Copyright © 2006–2010, Texas Instruments Incorporated

Block Diagram

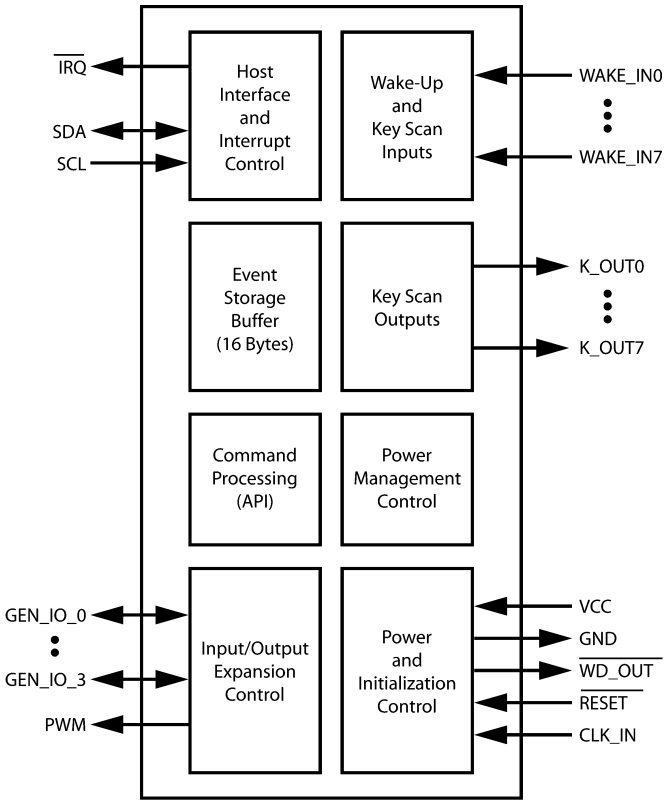

Pin Assignments

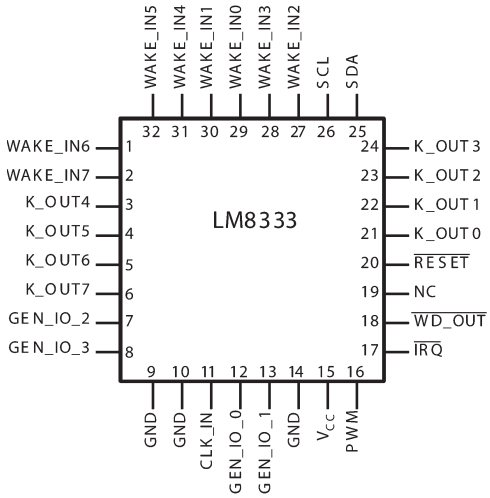

Figure 1. 32-Lead WQFN (Top View)
See Package Number NJE0032A

Copyright © 2006–2010, Texas Instruments Incorporated

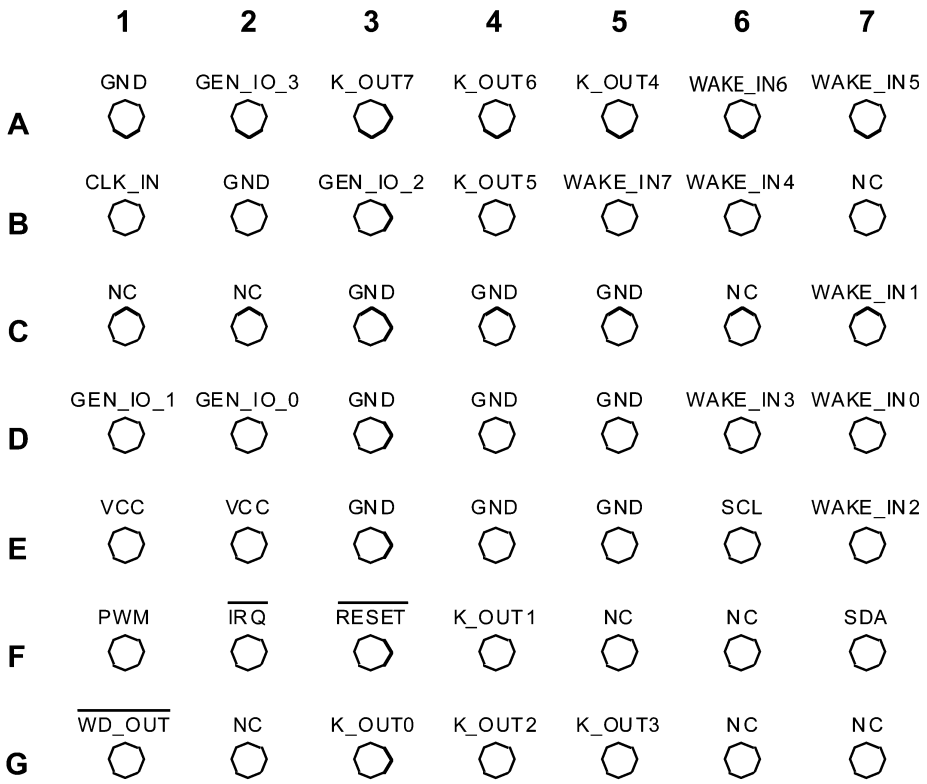

Figure 2. 49-Ball csBGA (Top View)
See Package Number NYC0049A

SIGNAL DESCRIPTIONS

Name	32 Pins	49 Pins	I/O	Description
WAKE_IN0	29	D7	Input	Wake-up input/Keyboard scanning input 0
WAKE_IN1	30	C7	Input	Wake-up input/Keyboard scanning input 1
WAKE_IN2	27	E7	Input	Wake-up input/Keyboard scanning input 2
WAKE_IN3	28	D6	Input	Wake-up input/Keyboard scanning input 3
WAKE_IN4	31	B6	Input	Wake-up input/Keyboard scanning input 4
WAKE_IN5	32	A7	Input	Wake-up input/Keyboard scanning input 5
WAKE_IN6	1	A6	Input	Wake-up input/Keyboard scanning input 6
WAKE_IN7	2	B5	Input	Wake-up input/Keyboard scanning input 7
K_OUT0	21	G3	Output	Keyboard scanning output 0
K_OUT1	22	F4	Output	Keyboard scanning output 1
K_OUT2	23	G4	Output	Keyboard scanning output 2
K_OUT3	24	G5	Output	Keyboard scanning output 3
K_OUT4	3	A5	Output	Keyboard scanning output 4
K_OUT5	4	B4	Output	Keyboard scanning output 5
K_OUT6	5	A4	Output	Keyboard scanning output 6
K_OUT7	6	A3	Output	Keyboard scanning output 7
GEN_IO_0	12	D2	I/O	General-purpose I/O 0
GEN_IO_1	13	D1	I/O	General-purpose I/O 1
GEN_IO_2	7	B3	I/O	General-purpose I/O 2
GEN_IO_3	8	A2	I/O	General-purpose I/O 3
SDA	25	F7	I/O	ACCESS.bus data signal
SCL	26	E6	Input	ACCESS.bus clock signal
$\overline{\text{IRQ}}$	17	F2	Output	Interrupt request output
PWM	16	F1	Output	Pulse-width modulated output
$\overline{\text{WD_OUT}}$	18	G1	Output	Watchdog timer output (connect to RESET input)
$\overline{\text{RESET}}$	20	F3	Input	Reset input
CLK_IN	11	B1	Input	Clock input (connect to ground through a 68k ohm resistor)
VCC	15	E1, E2	n.a.	Vcc
GND	9, 10, 14	A1, B2, C3, C4, C5, D3, D4, D5, E3, E4, E5	n.a.	Ground
NC	19	B7, C1, C2, C6, F5, F6, G2, G6, G7	n.a.	No connect

Copyright © 2006–2010, Texas Instruments Incorporated

Typical Application

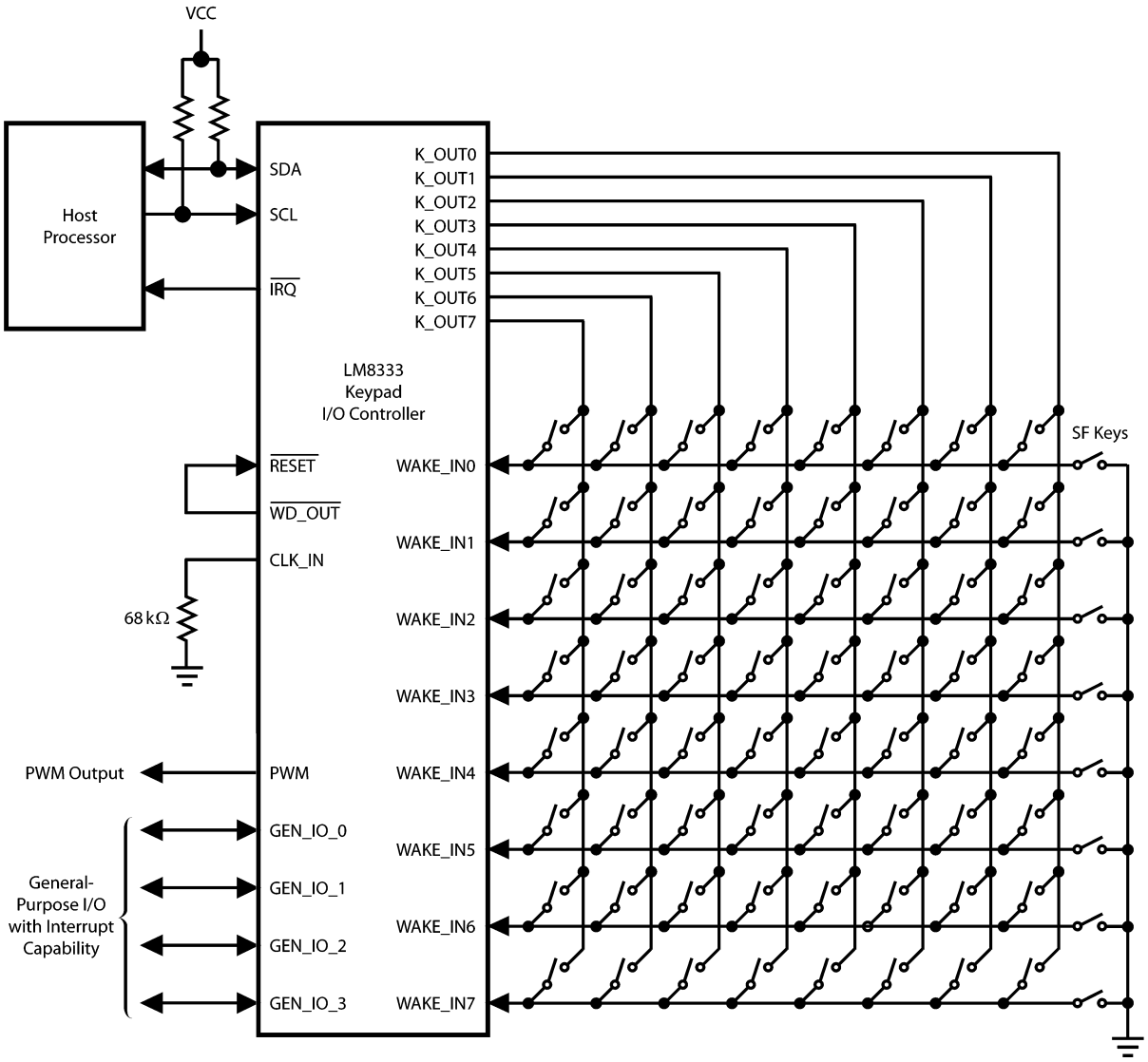

Figure 3. Typical Keypad Configuration

FEATURES

The following features are supported:

- 8 x 8 Standard Keys.
- 8 Special Function Keys (SF keys) with Wake-Up Capability by Forcing a WAKE_INx Pin to Ground. Pressing a SF Key Overrides any other Key in the Same Row.
- A Total of 72 Keys can be Scanned.
- ACCESS.Bus (I^2C-Compatible) Interface for Communication with the Host.
- The Watchdog Timer is Mandatory, so $\overline{\text{WD_OUT}}$ Must be Connected to $\overline{\text{RESET}}$.

I/O EXPANSION OPTIONS

- One Host-Programmable PWM Output which also may be Used as a General-Purpose Output.
- Four Host-Programmable General-Purpose I/O Pins, GEN_IO_0, GEN_IO_1, GEN_IO_2, and GEN_IO_3. GEN_IO_0 and GEN_IO_1 can also be Configured for “Slow” Interrupts, in which any Transition will Trigger a Hardware Interrupt Event to the Host.

Copyright © 2006–2010, Texas Instruments Incorporated

WATCHDOG TIMER

The watchdog timer is always enabled in hardware. To use the timer, connect the $\overline{\text{WD_OUT}}$ output to the $\overline{\text{RESET}}$ input.

HALT MODE

The fully static architecture of the LM8333 allows stopping the internal RC clock in Halt mode, which reduces power consumption to the minimum level.

Halt mode is entered when no key-press, key-release, or ACCESS.bus activity is detected for a certain period of time (by default, 500 milliseconds). The mechanism for entering Halt mode is always enabled in hardware, but the host can program the period of inactivity which triggers entry into Halt mode.

The LM8333 will remain in Active mode as long as a key event, or any other event, which causes the $\overline{\text{IRQ}}$ output to be asserted is not resolved.

ACCESS.bus Activity

When the LM8333 is in Halt mode, any activity on the ACCESS.bus interface will cause the LM8333 to exit from Halt mode. However, the LM8333 will not be able to acknowledge the first bus cycle immediately following wake-up from Halt mode. It will respond with a negative acknowledgement, and the host should then repeat the cycle.

The LM8333 will be prevented from entering Halt mode if it shares the bus with peripherals that are continuously active. For lowest power consumption, the LM8333 should only share the bus with peripherals that require little or no bus activity after system initialization.

KEYPAD SCANNING

The LM8333 starts new scanning cycles at fixed time intervals of about 4 ms. If a change in the state of the keypad is detected, the keypad is rescanned after a debounce delay. When the state change has been reliably captured, it is encoded and written to the FIFO buffer.

If more than two keys are pressed simultaneously, the pattern of key closures may be ambiguous, so pressing more than two keys asserts the Error Flag condition and the $\overline{\text{IRQ}}$ output (if enabled). The host may attempt to interpret the events stored in the FIFO or discard them.

The SF keys connect the WAKE_INx pins directly to ground. There can be up to eight SF-keys. If any of these keys are pressed, other key presses that use the same WAKE_INx pin will be ignored.

COMMUNICATION INTERFACE

The two-wire ACCESS.bus interface is used to communicate with a host. The ACCESS.bus interface is fully compliant with the I^2Cbus standard. The LM8333 operates as a bus slave at speeds up to 400 kHz.

An ACCESS.bus transfer starts with a byte that includes a 7-bit slave device address. The LM8333 responds to a fixed device address. This address is 0xA2, when aligned to the MSB (7-bit address mapped to bits 7:1, rather than bits 6:0). Bit 0 is a direction bit (0 on write, 1 on read).

Because it is a slave, the LM8333 never initiates an ACCESS.bus cycle, it only responds to bus cycles initiated by the host. The LM8333 may signal events to the host by asserting the $\overline{\text{IRQ}}$ interrupt request.

Interrupts Between the Host and LM8333

The $\overline{\text{IRQ}}$ output is used to signal unresolved interrupts, errors, and key-events to the host.

The host can use an available GEN_IO_0 or GEN_IO_1 pin to interrupt (or wake-up) the LM8333, if it is not being used for another function. The host can also wake-up the LM8333 by sending a Start Condition on the ACCESS.bus interface.

NOTE

The LM8333 it will not be able to acknowledge the first byte received from the host after wake-up. In this case, the host will have to resend the slave address.

Copyright © 2006–2010, Texas Instruments Incorporated

Interrupt Sources

The $\overline{\text{IRQ}}$ output is asserted on these conditions:

- Any new key-event.
- Any error condition, which is indicated by the error code.
- Any enabled interrupt on either of the GEN_IO_0 or GEN_IO_1 pins that can be configured as external interrupt inputs. When enabled, any rising or falling edge triggers an interrupt.

The $\overline{\text{IRQ}}$ output remains asserted until the interrupt code is read.

Device Operation

EVENT CODE ASSIGNMENT

After power-on reset, the LM8333 starts scanning the keypad. It stays active for a default time of about 500 ms after the last key is released, after which it enters a standby mode to minimize power consumption (<2 µA standby current).

Table 1 lists the codes assigned to the matrix positions encoded by the hardware. Key-press events are assigned the codes listed in Table 1, but with the MSB set. When a key is released, the MSB of the code is clear.

Table 1. Keypad Matrix Code Assignments

	K_OUT0	K_OUT1	K_OUT2	K_OUT3	K_OUT4	K_OUT5	K_OUT6	K_OUT7	SF Keys
WAKE_IN0	0x01	0x02	0x03	0x04	0x05	0x06	0x07	0x08	0x09
WAKE_IN1	0x11	0x12	0x13	0x14	0x15	0x16	0x17	0x18	0x19
WAKE_IN2	0x21	0x22	0x23	0x24	0x25	0x26	0x27	0x28	0x29
WAKE_IN3	0x31	0x32	0x33	0x34	0x35	0x36	0x37	0x38	0x39
WAKE_IN4	0x41	0x42	0x43	0x44	0x45	0x46	0x47	0x48	0x49
WAKE_IN5	0x51	0x52	0x53	0x54	0x55	0x56	0x57	0x58	0x59
WAKE_IN6	0x61	0x62	0x63	0x64	0x65	0x66	0x67	0x68	0x69
WAKE_IN7	0x71	0x72	0x73	0x74	0x75	0x76	0x77	0x78	0x79

The codes are loaded into the FIFO buffer in the order in which they occurred. Table 2 shows an example sequence of events, and Figure 4 shows the resulting sequence of event codes loaded into the FIFO buffer.

Table 2. Example Sequence of Events

Event Number	Event Code	Event on Input	Matrix Node	Description
1	0xF1	Wake_INP7	K_OUT0	Key is pressed
2	0xB6	Wake_INP3	K_OUT5	Key is pressed
3	0x71	Wake_INP7	K_OUT0	Key is released
4	0x36	Wake_INP3	K_OUT5	Key is released
5	0xB4	Wake_INP3	K_OUT3	Key is pressed
6	0x34	Wake_INP3	K_OUT3	Key is released33
7	0x91	Wake_INP1	K_OUT0	Key is pressed
8	0x00	NA	NA	Indicates end of stored events

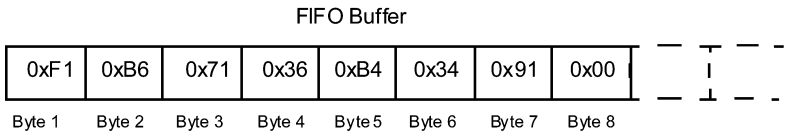

Figure 4. Example Event Codes Loaded in FIFO Buffer

I/O EXPANSION

In addition to keypad scanning, the LM8333 supports various I/O expansion options.

Copyright © 2006–2010, Texas Instruments Incorporated

PWM Output with Programmable Duty Cycle

The PWM pin may be used either as a pulse-width modulated output driven by a 16-bit timer or as a general-purpose output pin. In the PWM mode, the low time (T_{LO}) and high time (T_{HI}) are programmable between 1 × t_C and 65K × t_C cycles in which t_C is the cycle time (nominally 1 microsecond), as shown in Figure 5. The period T_{PD} is the sum of T_{HI} and T_{LO}. The PWM_LO command writes T_{LO}, and the PWM_HI command writes T_{HI}. Operational modes of the PWM pin are controlled by the PWM_CTL command. Before activating the PWM output, the T_{LO} and T_{HI} times must be initialized. Figure 6 shows the command formats.

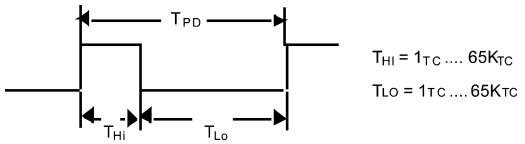

Figure 5. Programmable PWM

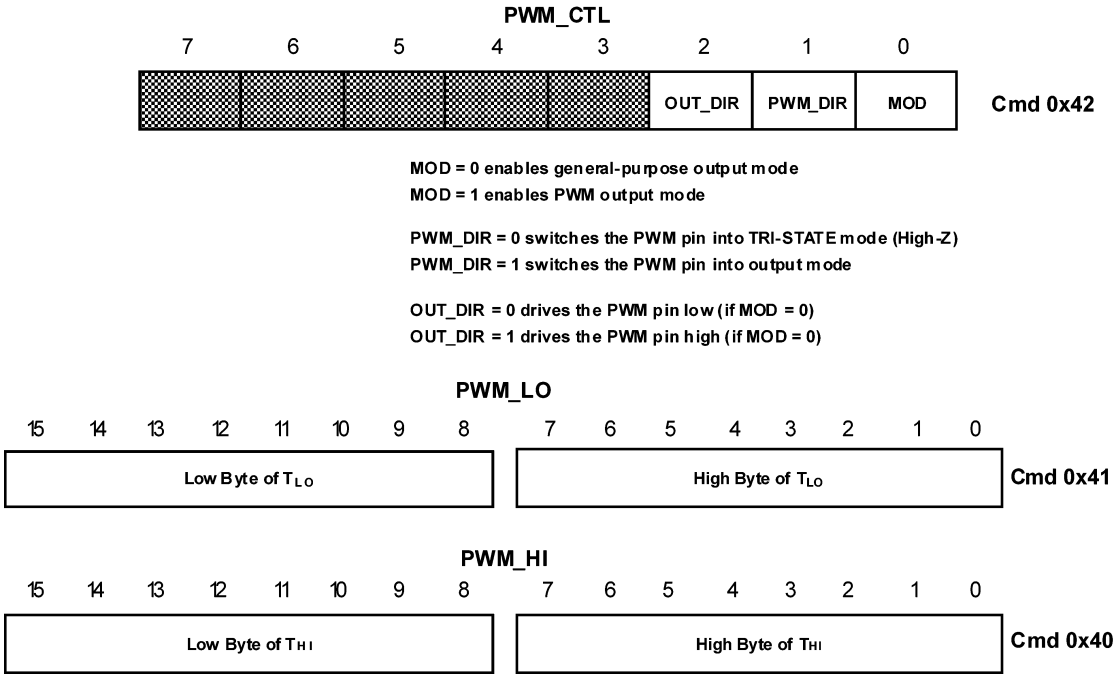

Figure 6. PWM Control Commands for Arbitrary Duty Cycle

Table 3. Summary of PWM Control Bits

OUT_DIR Bit	PWM_DIR Bit	MOD BIT	Description
0	1	0	Drive output low
1	1	0	Drive output high
0	0	0	TRI-STATE® mode
X	X	1	PWM timer output

General-Purpose I/O (GPIO)

Figure 7 shows the commands to write, read and control the general-purpose I/O port pins, GEN_IO_0, GEN_IO_1, GEN_IO_2, and GEN_IO_3.

All general-purpose I/O pins can be programmed as inputs or outputs as shown in Table 4. The GEN_IO_0 and GEN_IO_1 pins provide an additional capability for programmable wake-up.

Copyright © 2006–2010, Texas Instruments Incorporated

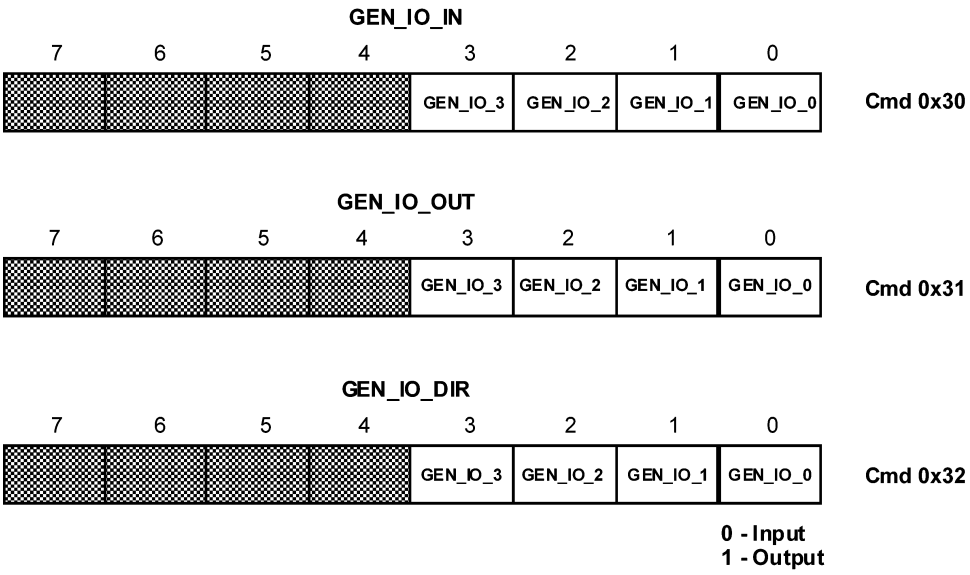

Figure 7. General-Purpose I/O Control Commands

Table 4 shows the pin configuration for all four combinations of control bit settings (data output and direction) for the general-purpose I/O pins. GEN_IO_3 cannot be put into the high impedance (Hi-Z) input mode. When programmed as an input, it can only be configured as an input with a weak pullup.

Table 4. General Purpose I/O Pin Configuration

GEN_IO_DIR Bit	GEN_IO_OUT Bit	Direction	State
0	0	Input	Hi-Z
0	1	Input	Weak Pullup
1	0	Output	Drive Low
1	1	Output	Drive High

External Interrupts

When the GEN_IO_0 or GEN_IO_1 pins are configured as inputs, a SET_EXT_INT command (0xD1) can be used to enable receiving external interrupts on either or both of these pins. Setting the EX_0 or EX_1 bits in the data byte of the SET_EXT_INT command (as shown in Figure 8) enables the corresponding pin as an external interrupt input. When enabled as an interrupt input, any rising or falling edge causes the $\overline{IRQ}$ output to be asserted. If the LM8333 was in Halt mode, it also wakes up into Active mode.

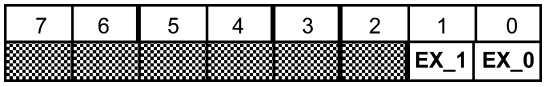

Figure 8. SET_EXT_INT Command Data Byte

When both GEN_IO_0 and GEN_IO_1 are configured as interrupt inputs, bits 1 and 2 of the interrupt code indicate which input asserted the interrupt. However, if only one of GEN_IO_0 or GEN_IO_1 is configured as an interrupt input, both bits 1 and 2 of the interrupt code will be set when an interrupt occurs.

Table 5. Interface Commands for Controlling the LM8333

Function	Cmd	Dir	Data Bits	Data	Description
FIFO_READ	**0x20**	R	128	Event Codes from FIFO	Read an event from the FIFO. Maximum 14 event codes stored in the FIFO. MSB = 1: key pressed. MSB = 0: key released.
RPT_FIFO_READ	**0x21**	R	128	Event Codes from FIFO	Repeats a FIFO read without advancing the FIFO pointer, for example to retry a read after an error. Maximum 14 event codes stored in the FIFO. MSB = 1: key pressed. MSB = 0: key released.
DEBOUNCE	**0x22**	W	8	nnnn nnnn	Default is 10 ms. Valid range 1–255. Time ~ n × 3 ms
GEN_IO_IN	**0x30**	R	8	0000 nnnn	Read port data.
GEN_IO_OUT	**0x31**	W	8	0000 nnnn	Specify port mode. (Drive 0 or 1 when the port is configured as an output; select Hi-Z or pullup when the port is configured as an input.)
GEN_IO_DIR	**0x32**	W	8	0000 nnnn	Select port direction (input or output).
PWM_HI	**0x40**	W	16	(n+1) × t_C	Sets the low pulse time of the PWM signal.
PWM_LO	**0x41**	W	16	(n+1) × t_C	Sets the high pulse time of the PWM signal.
PWM_CTL	**0x42**	W	8	0000 0nnn	Activate, reactivate, or stop PWM.
READ_INT	**0xD0**	R	8	0000 nnnn	Reads the interrupt code, acknowledges the interrupt, deasserts the $\overline{IRQ}$ output, and clears the code.
SET_EXT_INT	**0xD1**	W	8	0000 00nn	Enables/disables external interrupts on GEN_IO_0 and GEN_IO_1.
READ_STAT	**0xE0**	R	8	000n nnnn	Status Information.
SCAN_REQ	**0xE3**	W	8		Requests rescanning the keypad (for example, after an error was reported).
ACTIVE	**0xE4**	W	8	nnnn nnnn	Specifies the time after the last event during which the LM8333 stays active before entering Halt mode. The active time must be greater than the debounce time. Default is 500 msec Valid range for n is 1–255 Time ~ n × 3 msec.
READ_ERROR	**0xF0**	R	8	0nnn nnnn	Reads and clears the error code.

HOST COMMAND EXECUTION

Command Structure

All communication with the LM8333 over the ACCESS.bus interface is initiated by the host, usually in response to an interrupt request ($\overline{IRQ}$ low) asserted by the LM8333. Figure 9 shows a sequence of Start conditions, slave addresses, READ_INT command (0xD0), acknowledge cycles, data bytes, and Stop condition for reading the interrupt code.

 Copyright © 2006–2010, Texas Instruments Incorporated

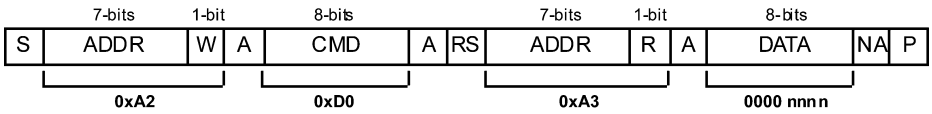

ADDR = 7-Bit Slave Address
S = Start Condition
P = Stop Condition
A = Acknowledgement
RS = Repeated Start Condition
NA = Negative Acknowledgement
CMD = Command
W = Write Direction Bit (0)
R = Read Direction Bit (1)

Figure 9. Typical Command Sequence from Host

Every transfer is preceded by a Start condition (S) or a Repeated Start condition (RS). The latter occurs when a command follows immediately upon another command without an intervening Stop condition (P). A Stop condition indicates the end of transmission. Every byte is acknowledged (A) by the receiver.

The first byte in a write from the host to the LM8333 is 0xA2, and the first byte in a read is 0xA3. This byte is composed of a 7-bit slave address in bits 7:1 and a direction bit in bit 0. The direction bit is 0 on writes from the host to the slave and 1 on reads from the slave to the host.

The second byte sends the command. The commands are listed in Table 5. In the example, the READ_INT command (0xD0) reads the interrupt code.

The slave address is repeated in the third byte, with the direction bit set to 1. The Start (or Repeated Start) condition must be repeated whenever the slave address or the direction bit is changed. In this case, the direction bit is changed.

The data is sent from the slave to the host in the fourth byte. When the master is the receiver, it sends a negative acknowledgement (NA) to indicate the end of the data.

HOST WRITE COMMANDS

Some host commands include one or more data bytes written to the LM8333. Figure 10 shows a SET_EXT_INT command, which consists of an address byte, a command byte, and one data byte.

The first byte is composed of a 7-bit slave address in bits 7:1 and a direction bit in bit 0. The state of the direction bit is 0 on writes from the host to the slave and 1 on reads from the slave to the host.

The second byte sends the command. The commands are listed in Figure 11. The SET_EXT_INT command is 0xD1.

The third byte send the data, in this case configuring GEN_IO_0 as an external interrupt input.

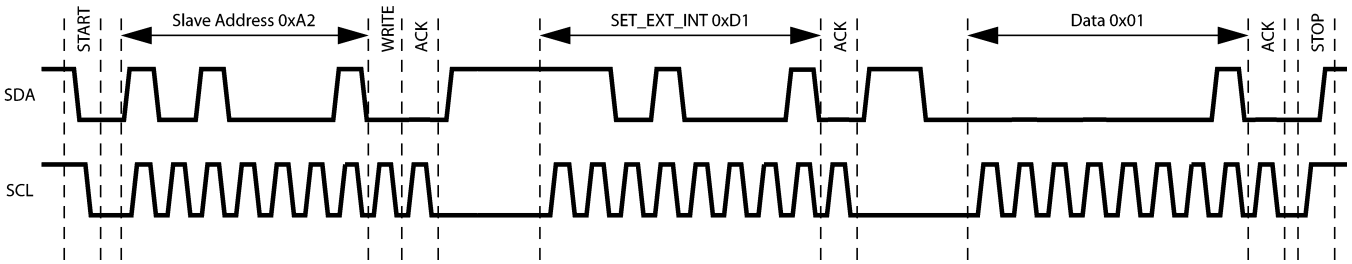

Figure 10. Host Write Command

HOST READ COMMANDS

NOTE: All NSIDs perform as described in this section. NSID LM8333GGR8AXS is an enhanced version which also allows the use of a STOP START sequence in addition to the REPEATED_START sequence described in this section.

Some host commands include one or more data bytes read from the LM8333. Figure 11 shows a READ_INT command which consists of an address byte, a command byte, a second address byte, and a data byte.

The first address byte is sent with the direction bit driven low to indicate a write transaction of the command to the LM8333. The second address byte is sent with the direction bit undriven (pulled high) to indicate a read transaction of the data from the LM8333.

The Repeated Start condition must be repeated whenever the slave address or the direction bit is changed. In this case, the direction bit is changed.

The data is sent from the slave to the host in the fourth byte. This byte ends with a negative acknowledgement (NACK) to indicate the end of the data.

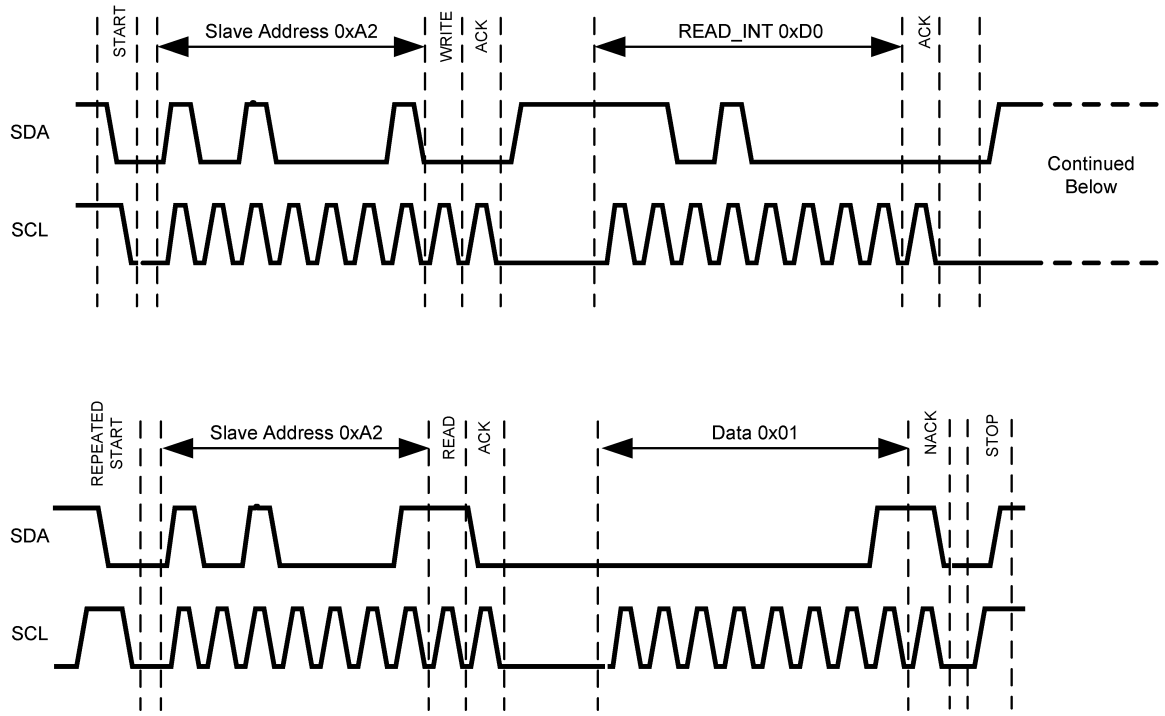

Figure 11. Host Read Command

WAKE-UP FROM HALT MODE

Any bus transaction initiated by the host may encounter the LM8333 device in Halt mode or busy with processing data, such as controlling the FIFO buffer or executing interrupt service routines.

Figure 12 shows the case in which the host sends a command while the LM8333 is in Halt mode (CPU clock is stopped). Any activity on the ACCESS.bus wakes up the LM8333, but it cannot acknowledge the first bus cycle immediately after wake-up.

The host drives a Start condition followed by seven address bits and a R/W bit. The host then releases SDA for one clock period, so that it can be driven by the LM8333.

If the LM8333 does not drive SDA low during the high phase of the clock period immediately after the R/W bit, the bus cycle terminates without being acknowledged (shown as NACK in Figure 12). The host then aborts the transaction by sending a Stop condition. After aborting the bus cycle, the host may then retry the bus cycle. On the second attempt, the LM8333 will be able to acknowledge the slave address, because it will be in Active mode.

Alternatively, the I^2C specification allows sending a START byte (00000001), which will not be acknowledged by any device. This byte can be used to wake up the LM8333 from Halt mode.

The LM8333 may also stall the bus transaction by pulling the SCL low, which is a valid behavior defined by the I^2C specification.

 Copyright © 2006–2010, Texas Instruments Incorporated

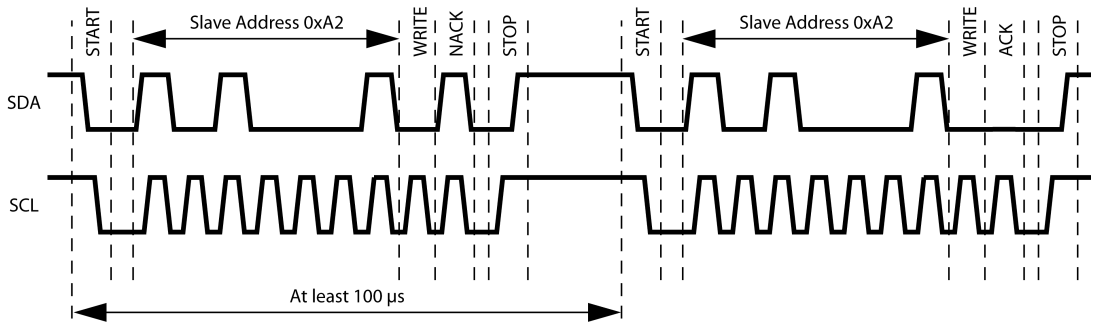

Figure 12. LM8333 Responds with NACK, Host Retries Command

Interrupts

INTERRUPT CODE

The interrupt code is read and acknowledged with the READ_INT command (0xD0). This command clears the code and deasserts the $\overline{IRQ}$ output. Table 6 shows the format of the interrupt code.

Note that when only one of the interrupt-capable pins GEN_IO_0 or GEN_IO_1 is configured as an interrupt input, bits 1 and 2 are both set when an interrupt occurs. When both GEN_IO_0 and GEN_IO_1 pins are configured as interrupt inputs, only one bit corresponding to the interrupt source is set when an interrupt occurs.

Table 6. Interrupt Code

7	6	5	4	3	2	1	0
0	0	0	0	ERROR	EX_1	EX_0	KEYPAD

Bit	Description
ERROR	An error condition occurred.
EX_1	A rising or falling edge was detected on GEN_IO_1.
EX_0	A rising or falling edge was detected on GEN_IO_0.
KEYPAD	A key-press or key-release event occurred.

ERROR CODE

If the LM8333 reports an error, the READ_ERROR command (0xF0) is used to read and clear the error code. Table 7 shows the format of the error code.

Table 7. Error Code

7	6	5	4	3	2	1	0
0	FIFOOVR	0	NOINT	0	KEYOVR	CMDUNK	CMDOVR

Bit	Description
FIFOOVR	Key event occurred while the FIFO was full.
NOINT	Interrupt deasserted before it could be serviced.
KEYOVR	More than two keys were pressed simultaneously.
CMDUNK	Not a valid command.
CMDOVR	Command received before it could be accepted, e.g. after wake-up.

Copyright © 2006–2010, Texas Instruments Incorporated

STATUS CODES

The host can use the READ_STAT command (0xE0) to read the status code, for example to synchronize after an error.

Table 8. Status Codes

Status	Code	Description
Reset	0000 0000	Default after reset.
Wake Up Interrupt	0000 0010	Wake-up caused by external interrupt.
Ack	0000 0110	Last host command was successful.
NoAck	0001 0101	Last host command was not successful.

INTERRUPT PROCESSING

Unexpected states encountered during run-time, for example overrun of the FIFO buffer, are reported as errors. When the host receives an interrupt from the LM8333, it uses a READ_INT command to read the interrupt code. If the code has a set ERROR bit, the host then uses a READ_ERROR command to read the error code, as shown in Figure 13.

Copyright © 2006–2010, Texas Instruments Incorporated

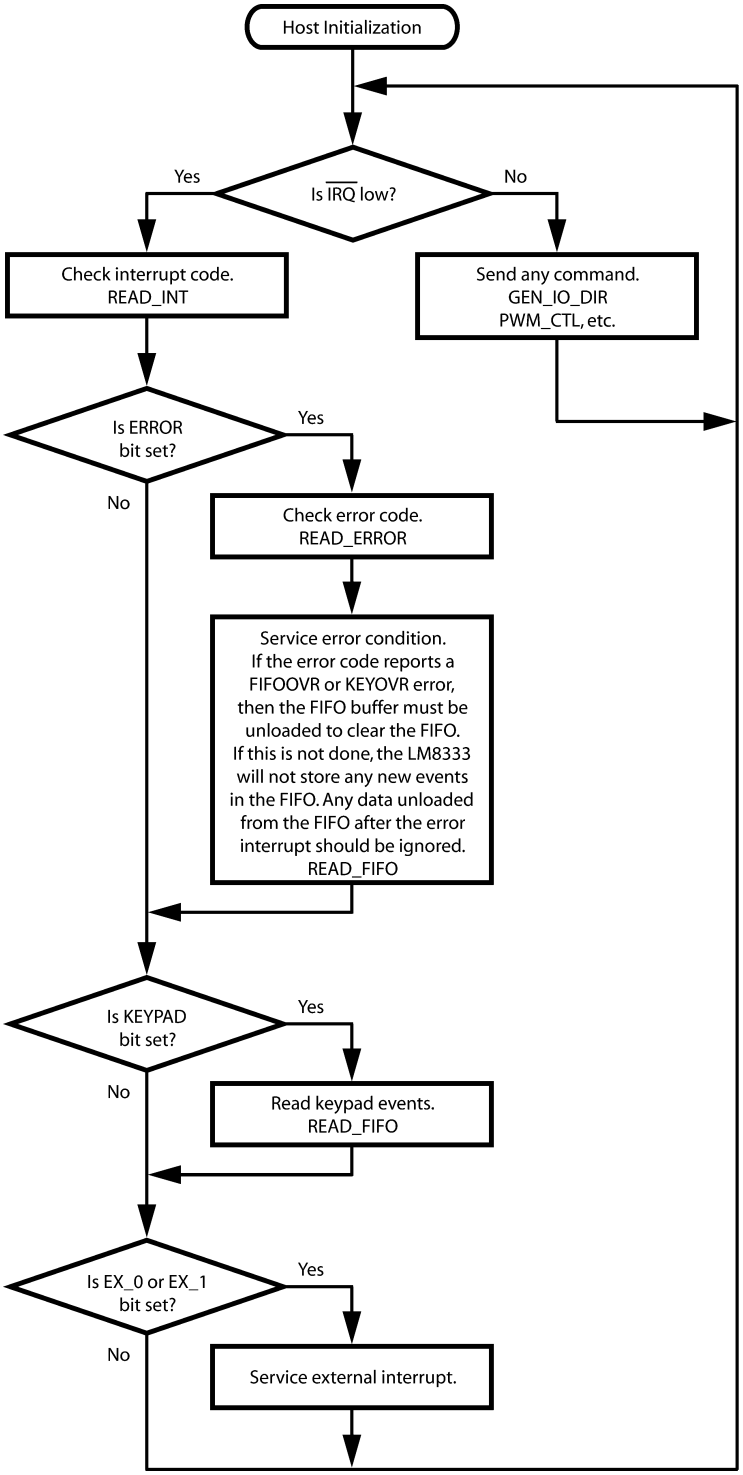

Figure 13. Interrupt Processing

COMMAND EXECUTION SUMMARY

- With the interrupt, status, and error codes, the LM8333 provides the features needed to support a reliable key-scan functionality.
- Up to 14 key-scan events can be stored in an internal FIFO buffer. The end of buffer is indicated with the 00 (empty character) code.
- The host can repeatedly read the FIFO without modifying the FIFO pointer using the RPT_FIFO_READ command (0x21), for example if an error is encountered during a read.
- The LM8333 asserts the $\overline{IRQ}$ output low when a new character is pressed after the last interrupt acknowledge from the host. The $\overline{IRQ}$ output will be deasserted after the host has acknowledged the interrupt by reading the interrupt code using the READ_INT command (0xD0).
- The host can synchronize with the LM8333 by reading the status code with the READ_STAT command (0xE0). The status code verifies whether the last command was successfully completed.
- Two GPIO pins on the LM8333 may be configured as external interrupt inputs. A rising or falling edge on an enabled interrupt input triggers wake-up from Halt mode and asserts an interrupt to the host by pulling the $\overline{IRQ}$ output low.
- The host can change the debounce time from the default time of 10 ms. This can be used for reliable scanning of keyboards with noisy contacts. The debounce time can be set to about 1 second in steps of 4 milliseconds. The debounce time is set with the DEBOUNCE command (0x22).
- The host can change the active time permitted before entering Halt mode from the default period of 500 ms. The active time is the time during which the keypad is scanned after the last key is released, before entering Halt mode. The active time must be longer than the debounce time.
- The host can program the direction and output state of four general-purpose I/O pins. The host can also read the states on these pins.
- The host can program a 16-bit timer for generating a PWM output. If the PWM function is not used, the PWM pin can be used as a general-purpose output.

Copyright © 2006–2010, Texas Instruments Incorporated

These devices have limited built-in ESD protection. The leads should be shorted together or the device placed in conductive foam during storage or handling to prevent electrostatic damage to the MOS gates.

ABSOLUTE MAXIMUM RATINGS [1][2]

Supply Voltage (V_{CC})	3.5V
Voltage at Any Pin	-0.3V to VCC +0.3V
Maximum Input Current Without Latchup	±100 mA
ESD Protection Level	
Human Body Model	2 kV
Machine Model	200V
Total Current into VCC Pin (Source)	80 mA
Total Current out of GND Pin (Sink)	60 mA
Storage Temperature Range	−65°C to +140°C

(1) Absolute Maximum Ratings indicate limits beyond which damage to the device may occur. Operating Ratings indicate conditions for which the device is intended to be functional, but specific performance is not specified. For specifications and test conditions, see the Electrical Characteristics tables.
(2) If Military/Aerospace specified devices are required, please contact the Texas Instruments Sales Office/ Distributors for availability and specifications.

DC ELECTRICAL CHARACTERISTICS

(Temperature: -40°C ≤ TA ≤ +85°C)
Data sheet specification limits are specified by design, test, or statistical analysis.

Symbol	Parameter	Conditions	Min [1]	Typ	Max [1]	Units
V_{CC}	Operating Voltage		2.25		2.9	V
	Power Supply Rise Time from 0.0V (On Chip Power-On Reset Selected)		20 µs		10 ms	
I_{DD}	Supply Current [2]	RC Clock = 10 MHz, V_{CC} = 2.75V, T_C = 1 µs [3]			6	mA
I_{HALT}	Standby Mode Current [4]	V_{CC} = 2.75V, T_C = 0 µs, [3], T_A = 25°C		<2	15	µA
V_{IL}	Logical 0 Input Voltage				0.25 V_{CC}	V
V_{IH}	Logical 1 Input Voltage		0.8 V_{CC}			V
	Hi-Z Input Leakage (TRI-STATE Output)	V_{CC} = 2.75V	-0.1		0.1	µA
	Input PullupCurrent	V_{CC} = 2.75V, V_{IN} = 0V	-15		-120	µA
	Port Input Hysteresis [5]		0.1			V
	Output Current Source (Weak Pull-Up)	V_{CC} = 2.25V, V_{OH} = 1.7V	-10		-80	µA
	Output Current Source (Push-Pull Mode)	V_{CC} = 2.25V, V_{OH} = 1.7V	-10			mA
	Output CurrentSink (Push-Pull Mode)	V_{CC} = 2.25V, V_{OL} = 0.4V	10			mA
	Allowable Sink and Source Current per Pin				16	mA
C_{PAD}	Input Capacitance				8.5	pF

(1) Data sheet minimum and maximum limits are specified by design, test, or statistical analysis.
(2) Supply current is measured with inputs connected to V_{CC} and outputs driven low but not connected to a load.
(3) T_C = instruction cycle time (min. 0.7 µs).
(4) In Halt mode, the internal clock is switched off. Supply current in Halt mode is measured with inputs connected to V_{CC} and outputs driven low but not connected to a load.
(5) Specified by design, not tested.

Copyright © 2006–2010, Texas Instruments Incorporated

AC ELECTRICAL CHARACTERISTICS

(Temperature: -40°C ≤ T_A ≤ +85°C)
Data sheet specification limits are specified by design, test, or statistical analysis.

Parameter	Conditions	Min (1)	Typ	Max (1)	Units
Internal Oscillator System Oscillator (mclk)	External R from CLK_IN to GND (R = 68 kΩ) 2.25V ≤ V_{CC} ≤ 2.75V External R from CLK_IN to GND (R = 68 kΩ) 2.25V ≤ V_{CC} ≤ 2.75V		0.75 75		µs ns
System Oscillator and Internal Frequency Variation	2.25V ≤ V_{CC} ≤ 2.75V			±30	%
Input Pulse Width Low		0.7			µs
Input Pulse Width High		0.7			
ACCESS Bus Input Signals:					
Bus Free time Between Stop and Start Condition (I_{BUFI}) (1)(2)		16			
SCL Setup Time (t_{CSTO}si) (1)(2)	Before Stop Condition	8			
SCL Hold Time (t_{CSTR}hi) (1)(2)	After Stop Condition	8			
SCL Setup Time (t_{CSTR}si) (1)(2)	Before Start Condition	8			
Data High Setup Time (t_{DHCsi}) (1)(2)	Before SCL Rising Edge (RE)	2			mclk
Data Low Setup Time (t_{DLCsi}) (1)(2)	Before SCL RE	2			
SCL Low Time ($t_{SCLlowi}$) (1)	After SCL Falling Edge (FE)	12			
SCL High Time ($t_{SCLhighi}$) (1)(2)	After SCL RE	12			
SDA Hold Time (t_{SDAhi}) (1)	After SCL FE	0			
SDA Setup Time (t_{SDAsi}) (1)(2)	Before SCL RE	2			
ACCESS Bus Output Signals SDA Hold Time (t_{SDAho}) (3)	After SCL FE	7			mclk

(1) Specified by design, test, or statistical analysis.
(2) The ACCESS.bus interface implements and meets the timing necessary for interface to the I^2C bus and SMBus protocol at logic levels. The bus drivers are designed with open-drain output as required for bidirectional operation. Due to System Oscillator (mclk) Variation, this specification may not meet the AC timing and current/voltage drive requirements of the full bus specification.
(3) Specified by design, test, or statistical analysis.

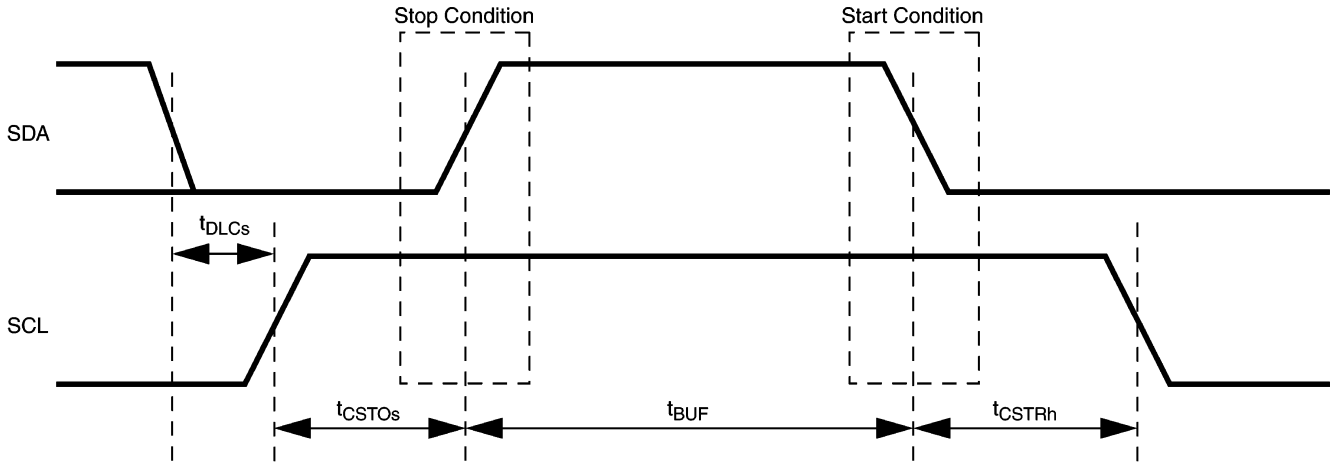

Note: In the timing tables the parameter name is appended with an "o" for output signal timing and "i" for input signal timing.

Figure 14. ACCESS.bus Start and Stop Condition Timing

Copyright © 2006–2010, Texas Instruments Incorporated

PACKAGING INFORMATION

Orderable Device	Status (1)	Package Type	Package Drawing	Pins	Package Qty	Eco Plan (2)	Lead/Ball Finish	MSL Peak Temp (3)	Op Temp (°C)	Top-Side Markings (4)	Samples
LM8333FLQ8X/NOPB	ACTIVE	WQFN	NJE	32	2500	Green (RoHS & no Sb/Br)	CU SN	Level-3-260C-168 HR		LM8333F	Samples
LM8333FLQ8Y/NOPB	ACTIVE	WQFN	NJE	32	250	Green (RoHS & no Sb/Br)	CU SN	Level-3-260C-168 HR		LM8333F	Samples
LM8333GGR8/NOPB	ACTIVE	csBGA	NYC	49	1000	Green (RoHS & no Sb/Br)	CU SNAGCU	Level-1-260C-UNLIM	-40 to 85	LM8333	Samples
LM8333GGR8AXS/NOPB	ACTIVE	csBGA	NYC	49	1000	Green (RoHS & no Sb/Br)	CU SNAGCU	Level-1-260C-UNLIM		8333AXS	Samples
LM8333GGR8AXSX/NOPB	ACTIVE	csBGA	NYC	49	3500	Green (RoHS & no Sb/Br)	CU SNAGCU	Level-1-260C-UNLIM		8333AXS	Samples
LM8333GGR8X/NOPB	ACTIVE	csBGA	NYC	49	3500	Green (RoHS & no Sb/Br)	CU SNAGCU	Level-1-260C-UNLIM	-40 to 85	LM8333	Samples

(1) The marketing status values are defined as follows:
ACTIVE: Product device recommended for new designs.
LIFEBUY: TI has announced that the device will be discontinued, and a lifetime-buy period is in effect.
NRND: Not recommended for new designs. Device is in production to support existing customers, but TI does not recommend using this part in a new design.
PREVIEW: Device has been announced but is not in production. Samples may or may not be available.
OBSOLETE: TI has discontinued the production of the device.

(2) Eco Plan - The planned eco-friendly classification: Pb-Free (RoHS), Pb-Free (RoHS Exempt), or Green (RoHS & no Sb/Br) - please check http://www.ti.com/productcontent for the latest availability information and additional product content details.
TBD: The Pb-Free/Green conversion plan has not been defined.
Pb-Free (RoHS): TI's terms "Lead-Free" or "Pb-Free" mean semiconductor products that are compatible with the current RoHS requirements for all 6 substances, including the requirement that lead not exceed 0.1% by weight in homogeneous materials. Where designed to be soldered at high temperatures, TI Pb-Free products are suitable for use in specified lead-free processes.
Pb-Free (RoHS Exempt): This component has a RoHS exemption for either 1) lead-based flip-chip solder bumps used between the die and package, or 2) lead-based die adhesive used between the die and leadframe. The component is otherwise considered Pb-Free (RoHS compatible) as defined above.
Green (RoHS & no Sb/Br): TI defines "Green" to mean Pb-Free (RoHS compatible), and free of Bromine (Br) and Antimony (Sb) based flame retardants (Br or Sb do not exceed 0.1% by weight in homogeneous material)

(3) MSL, Peak Temp. -- The Moisture Sensitivity Level rating according to the JEDEC industry standard classifications, and peak solder temperature.

(4) Only one of markings shown within the brackets will appear on the physical device.

Important Information and Disclaimer: The information provided on this page represents TI's knowledge and belief as of the date that it is provided. TI bases its knowledge and belief on information provided by third parties, and makes no representation or warranty as to the accuracy of such information. Efforts are underway to better integrate information from third parties. TI has taken and

continues to take reasonable steps to provide representative and accurate information but may not have conducted destructive testing or chemical analysis on incoming materials and chemicals.
TI and TI suppliers consider certain information to be proprietary, and thus CAS numbers and other limited information may not be available for release.

In no event shall TI's liability arising out of such information exceed the total purchase price of the TI part(s) at issue in this document sold by TI to Customer on an annual basis.

TAPE AND REEL INFORMATION

REEL DIMENSIONS

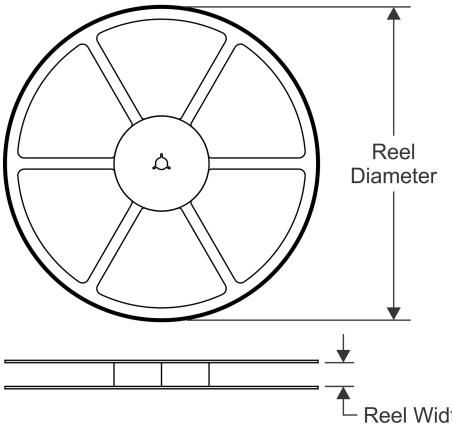

TAPE DIMENSIONS

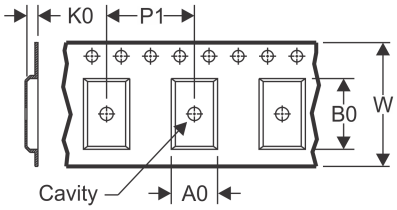

A0	Dimension designed to accommodate the component width
B0	Dimension designed to accommodate the component length
K0	Dimension designed to accommodate the component thickness
W	Overall width of the carrier tape
P1	Pitch between successive cavity centers

QUADRANT ASSIGNMENTS FOR PIN 1 ORIENTATION IN TAPE

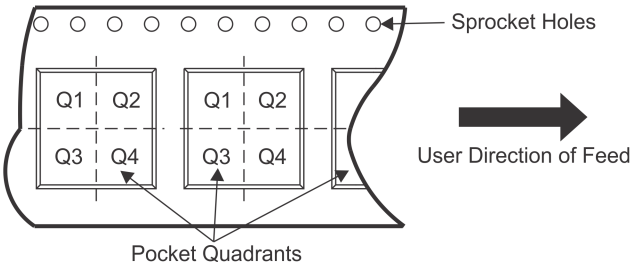

*All dimensions are nominal

Device	Package Type	Package Drawing	Pins	SPQ	Reel Diameter (mm)	Reel Width W1 (mm)	A0 (mm)	B0 (mm)	K0 (mm)	P1 (mm)	W (mm)	Pin1 Quadrant
LM8333FLQ8X/NOPB	WQFN	NJE	32	2500	330.0	16.4	6.3	6.3	1.5	12.0	16.0	Q1
LM8333FLQ8Y/NOPB	WQFN	NJE	32	250	178.0	16.4	6.3	6.3	1.5	12.0	16.0	Q1
LM8333GGR8/NOPB	csBGA	NYC	49	1000	178.0	12.4	4.3	4.3	1.5	8.0	12.0	Q1
LM8333GGR8AXS/NOPB	csBGA	NYC	49	1000	178.0	12.4	4.3	4.3	1.5	8.0	12.0	Q1
LM8333GGR8AXSX/NOPB	csBGA	NYC	49	3500	330.0	12.4	4.3	4.3	1.5	8.0	12.0	Q1
LM8333GGR8X/NOPB	csBGA	NYC	49	3500	330.0	12.4	4.3	4.3	1.5	8.0	12.0	Q1

TAPE AND REEL BOX DIMENSIONS

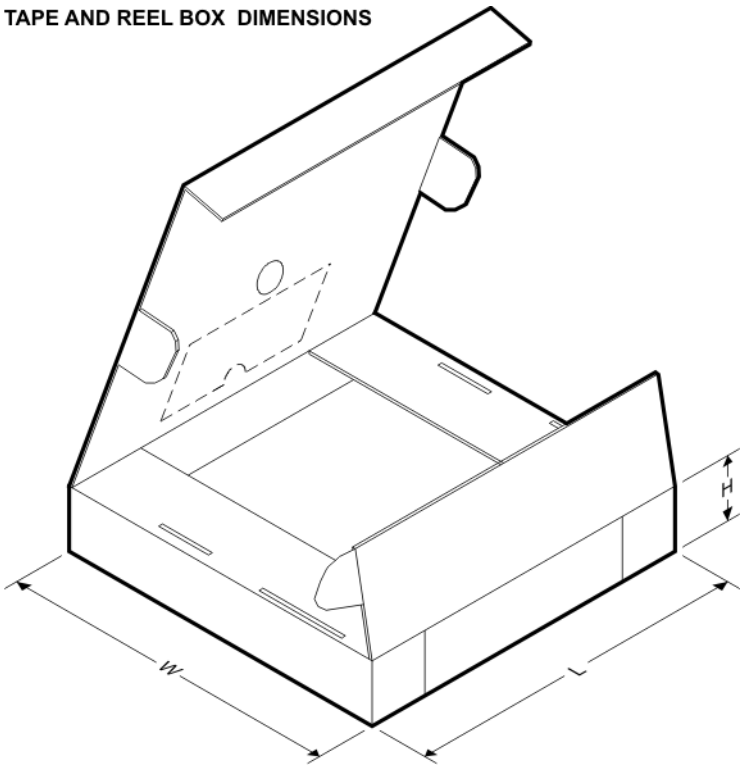

*All dimensions are nominal

Device	Package Type	Package Drawing	Pins	SPQ	Length (mm)	Width (mm)	Height (mm)
LM8333FLQ8X/NOPB	WQFN	NJE	32	2500	358.0	343.0	63.0
LM8333FLQ8Y/NOPB	WQFN	NJE	32	250	213.0	191.0	55.0
LM8333GGR8/NOPB	csBGA	NYC	49	1000	210.0	185.0	35.0
LM8333GGR8AXS/NOPB	csBGA	NYC	49	1000	210.0	185.0	35.0
LM8333GGR8AXSX/NOPB	csBGA	NYC	49	3500	367.0	367.0	35.0
LM8333GGR8X/NOPB	csBGA	NYC	49	3500	367.0	367.0	35.0

NYC0049A

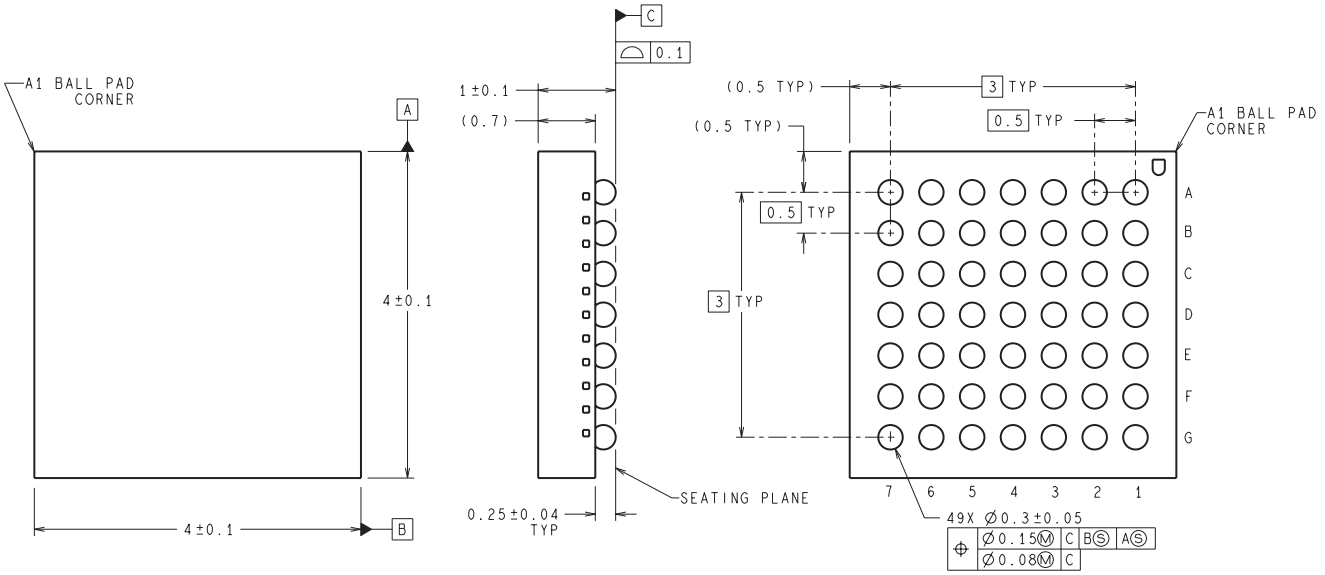

DIMENSIONS ARE IN MILLIMETERS
DIMENSIONS IN ( ) FOR REFERENCE ONLY

GRA49A (Rev A)

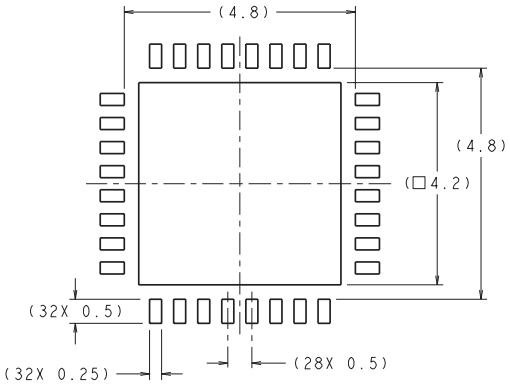

RECOMMENDED LAND PATTERN
1:1 RATIO WITH PKG SOLDER PADS

DIMENSIONS ARE IN MILLIMETERS

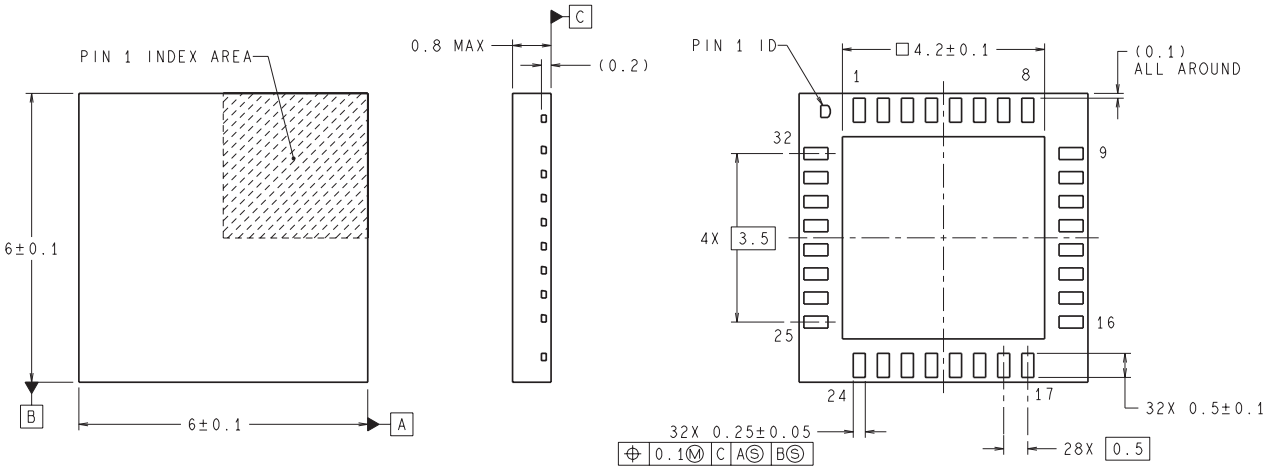

LQA32A (REV A)

IMPORTANT NOTICE

Texas Instruments Incorporated and its subsidiaries (TI) reserve the right to make corrections, enhancements, improvements and other changes to its semiconductor products and services per JESD46, latest issue, and to discontinue any product or service per JESD48, latest issue. Buyers should obtain the latest relevant information before placing orders and should verify that such information is current and complete. All semiconductor products (also referred to herein as “components”) are sold subject to TI’s terms and conditions of sale supplied at the time of order acknowledgment.

TI warrants performance of its components to the specifications applicable at the time of sale, in accordance with the warranty in TI’s terms and conditions of sale of semiconductor products. Testing and other quality control techniques are used to the extent TI deems necessary to support this warranty. Except where mandated by applicable law, testing of all parameters of each component is not necessarily performed.

TI assumes no liability for applications assistance or the design of Buyers’ products. Buyers are responsible for their products and applications using TI components. To minimize the risks associated with Buyers’ products and applications, Buyers should provide adequate design and operating safeguards.

TI does not warrant or represent that any license, either express or implied, is granted under any patent right, copyright, mask work right, or other intellectual property right relating to any combination, machine, or process in which TI components or services are used. Information published by TI regarding third-party products or services does not constitute a license to use such products or services or a warranty or endorsement thereof. Use of such information may require a license from a third party under the patents or other intellectual property of the third party, or a license from TI under the patents or other intellectual property of TI.

Reproduction of significant portions of TI information in TI data books or data sheets is permissible only if reproduction is without alteration and is accompanied by all associated warranties, conditions, limitations, and notices. TI is not responsible or liable for such altered documentation. Information of third parties may be subject to additional restrictions.

Resale of TI components or services with statements different from or beyond the parameters stated by TI for that component or service voids all express and any implied warranties for the associated TI component or service and is an unfair and deceptive business practice. TI is not responsible or liable for any such statements.

Buyer acknowledges and agrees that it is solely responsible for compliance with all legal, regulatory and safety-related requirements concerning its products, and any use of TI components in its applications, notwithstanding any applications-related information or support that may be provided by TI. Buyer represents and agrees that it has all the necessary expertise to create and implement safeguards which anticipate dangerous consequences of failures, monitor failures and their consequences, lessen the likelihood of failures that might cause harm and take appropriate remedial actions. Buyer will fully indemnify TI and its representatives against any damages arising out of the use of any TI components in safety-critical applications.

In some cases, TI components may be promoted specifically to facilitate safety-related applications. With such components, TI’s goal is to help enable customers to design and create their own end-product solutions that meet applicable functional safety standards and requirements. Nonetheless, such components are subject to these terms.

No TI components are authorized for use in FDA Class III (or similar life-critical medical equipment) unless authorized officers of the parties have executed a special agreement specifically governing such use.

Only those TI components which TI has specifically designated as military grade or “enhanced plastic” are designed and intended for use in military/aerospace applications or environments. Buyer acknowledges and agrees that any military or aerospace use of TI components which have ***not*** been so designated is solely at the Buyer's risk, and that Buyer is solely responsible for compliance with all legal and regulatory requirements in connection with such use.

TI has specifically designated certain components as meeting ISO/TS16949 requirements, mainly for automotive use. In any case of use of non-designated products, TI will not be responsible for any failure to meet ISO/TS16949.

Products		**Applications**	
Audio	www.ti.com/audio	Automotive and Transportation	www.ti.com/automotive
Amplifiers	amplifier.ti.com	Communications and Telecom	www.ti.com/communications
Data Converters	dataconverter.ti.com	Computers and Peripherals	www.ti.com/computers
DLP® Products	www.dlp.com	Consumer Electronics	www.ti.com/consumer-apps
DSP	dsp.ti.com	Energy and Lighting	www.ti.com/energy
Clocks and Timers	www.ti.com/clocks	Industrial	www.ti.com/industrial
Interface	interface.ti.com	Medical	www.ti.com/medical
Logic	logic.ti.com	Security	www.ti.com/security
Power Mgmt	power.ti.com	Space, Avionics and Defense	www.ti.com/space-avionics-defense
Microcontrollers	microcontroller.ti.com	Video and Imaging	www.ti.com/video
RFID	www.ti-rfid.com		
OMAP Applications Processors	www.ti.com/omap	**TI E2E Community**	e2e.ti.com
Wireless Connectivity	www.ti.com/wirelessconnectivity		

Mailing Address: Texas Instruments, Post Office Box 655303, Dallas, Texas 75265
Copyright © 2013, Texas Instruments Incorporated

Mouser Electronics

Authorized Distributor

Click to View Pricing, Inventory, Delivery & Lifecycle Information:

Texas Instruments:

LM8333EVALKIT