HSF RoHS c UL us CE

REVISION RECORD				
REV	ECN	DESCRIPTION	DRFT	DATE
A0		NEW		20.12.02

NOTES1:

UL Standard

1.Rated voltage/current : 300V / 41A

2.Withstanding voltage : AC1600V/1Min.

IEC Standard

1.

Pollution degree	2	2	3
Overvoltage category	Ⅱ	Ⅲ	Ⅲ
Rate impulse voltage(KV)	6KV	6KV	6KV
Rate voltage(V)	1000V	630V	630V
Rate current(A)	41A		

NOTES2:

1.Dimension shall be interpreted per ASME Y14.5-2009

2.Pitch : 7.62mm, Poles : N=02~12P

3.Operating temperature: -40°C~+105°C

4.Undimensioned tolerances:

Pitch range in mm			Nominal dimension range in mm					— ⌒ ▱
TO 6	Over 6 TO 10	Over 10 TO 24	TO 30	Over 30 TO 60	Over 60 TO 100	Over 100 TO 150	Over 150	0.1/10
								∠
±0.15	±0.20	±0.30	±0.30	±0.50	±0.70	±1.00	±1.30	±2°

5.RoHS Compliance

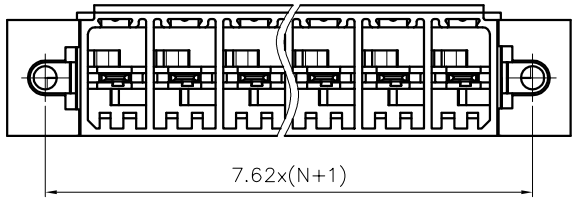

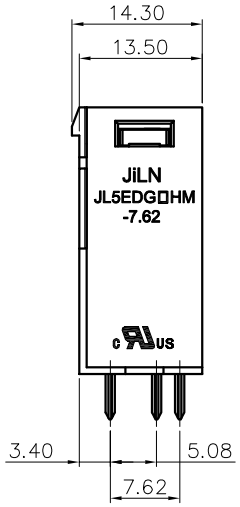

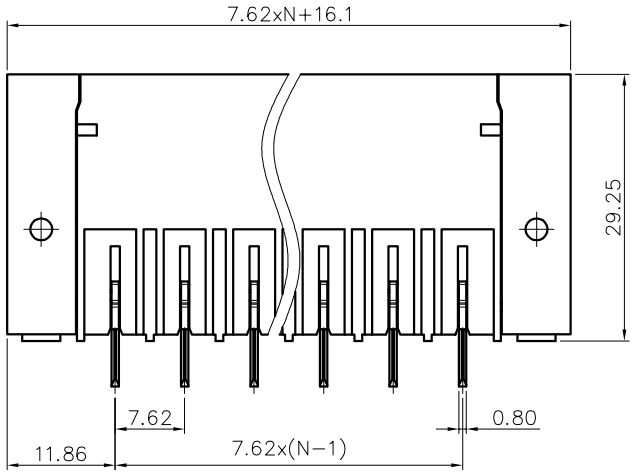

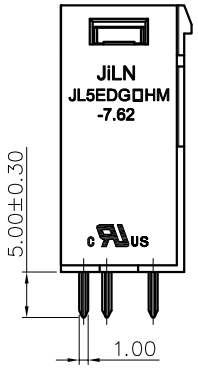

PCB LAYOUT

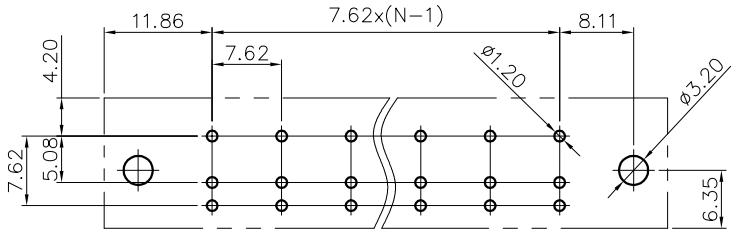

Ordering Information

JL5EDGVHM- 762 XX G 0 1

- 762: Pitch, 762=7.62PH
- XX: No.of pins, 2P,3P,4P~12P
- G: Housing Color
  - B=Black
  - G=Green
  - U=Blue
  - R=Red
  - W=White
  - Y=Yellow
  - O=Orange
  - E=Grey
- 0: Packing
  - 0=Pe bag
  - T=Tube
  - A=Tray
- 1: Packing

DRAW	SHUANGPING ZHENG	SCALE	FIT	JiLN® 东莞市锦凌电子有限公司 DONGGUAN JINLING ELECTRONIC CO.,LTD
		UNIT	mm	
CHECK	LICHAO LIU	SIZE	A4	PART NO. JL5EDGVHM-762XXG01
		SHEET	1/1	
APPROVE	YONGLIANG GAO	PROJ.		TITLE: JL5EDGVHM-7.62-XXP插拔式公座/带耳/绿色/直脚