HAF1001

Silicon P Channel MOS FET Series
Power Switching

REJ03G1132-0400
(Previous: ADE-208-583A)
Rev.4.00
Apr 27, 2006

Description

This FET has the over temperature shut-down capability sensing to the junction temperature.

This FET has the built-in over temperature shut-down circuit in the gate area. And this circuit operation to shut-down the gate voltage in case of high junction temperature like applying over power consumption, over current etc.

Features

- Logic level operation (–4 to –6 V Gate drive)
- High endurance capability against to the short circuit
- Built-in the over temperature shut-down circuit
- Latch type shut-down operation (Need 0 voltage recovery)

Outline

RENESAS Package code: PRSS0004AC-A
(Package name: TO-220AB)

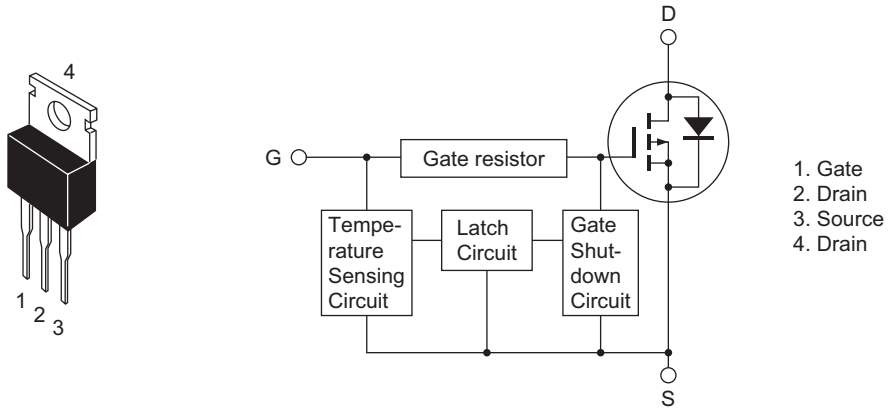

Absolute Maximum Ratings

(Ta = 25°C)

Item	Symbol	Value	Unit
Drain to source voltage	V_{DSS}	–60	V
Gate to source voltage	V_{GSS}	–16	V
	V_{GSS}	3	V
Drain current	I_D	–15	A
Drain peak current	$I_{D\ (pulse)}$ Note 1	–30	A
Body-drain diode reverse drain current	I_{DR}	–15	A
Channel dissipation	Pch Note 2	50	W
Channel temperature	Tch	150	°C
Storage temperature	Tstg	–55 to +150	°C

Notes: 1. PW ≤ 10 µs, duty cycle ≤ 1%
2. Value at Tc = 25°C

Typical Operation Characteristics

Item	Symbol	Min	Typ	Max	Unit	Test Conditions
Input voltage	V_{IH}	–3.5	—	—	V	
	V_{IL}	—	—	–1.2	V	
Input current (Gate non shut down)	I_{IH1}	—	—	–100	µA	Vi = –8 V, V_{DS} = 0
	I_{IH2}	—	—	–50	µA	Vi = –3.5 V, V_{DS} = 0
	I_{IL}	—	—	–1	µA	Vi = –1.2 V, V_{DS} = 0
Input current (Gate shut down)	$I_{IH\ (sd)\ 1}$	—	–0.8	—	mA	Vi = –8 V, V_{DS} = 0
	$I_{IH\ (sd)\ 2}$	—	–0.35	—	mA	Vi = –3.5 V, V_{DS} = 0
Shut down temperature	Tsd	—	175	—	°C	Channel temperature
Gate operation voltage	V_{OP}	–3.5	—	–13	V	

Electrical Characteristics

(Ta = 25°C)

Item	Symbol	Min	Typ	Max	Unit	Test Conditions
Drain current	I_{D1}	–7	—	—	A	V_{GS} = –3.5 V, V_{DS} = –2 V
	I_{D2}	—	—	–10	mA	V_{GS} = –1.2 V, V_{DS} = –2 V
Drain to source breakdown voltage	$V_{(BR)\ DSS}$	–60	—	—	V	I_D = –10 mA, V_{GS} = 0
Gate to source breakdown voltage	$V_{(BR)\ GSS}$	–16	—	—	V	I_G = –100 µA, V_{DS} = 0
	$V_{(BR)\ GSS}$	3	—	—	V	I_G = 100 µA, V_{DS} = 0
Gate to source leak current	I_{GSS1}	—	—	–100	µA	V_{GS} = –8 V, V_{DS} = 0
	I_{GSS2}	—	—	–50	µA	V_{GS} = –3.5 V, V_{DS} = 0
	I_{GSS3}	—	—	–1	µA	V_{GS} = –1.2 V, V_{DS} = 0
	I_{GSS4}	—	—	100	µA	V_{GS} = 2.4 V, V_{DS} = 0
Input current (shut down)	$I_{GS\ (op)\ 1}$	—	–0.8	—	mA	V_{GS} = –8 V, V_{DS} = 0
	$I_{GS\ (op)\ 2}$	—	–0.35	—	mA	V_{GS} = –3.5 V, V_{DS} = 0
Zero gate voltage drain current	I_{DSS}	—	—	–250	µA	V_{DS} = –50 V, V_{GS} = 0
Gate to source cutoff voltage	$V_{GS\ (off)}$	–1.1	—	–2.25	V	I_D = –1 mA, V_{DS} = –10 V
Static drain to source on state resistance	$R_{DS\ (on)}$	—	100	130	mΩ	I_D = –7.5 A, V_{GS} = –4 V Note 3
	$R_{DS\ (on)}$	—	70	90	mΩ	I_D = –7.5 A, V_{GS} = –10 V Note 3
Forward transfer admittance	$\|y_{fs}\|$	5	10	—	S	I_D = –7.5 A, V_{DS} = –10 V Note 3
Output capacitance	Coss	—	610	—	pF	V_{DS} = –10 V, V_{GS} = 0 f = 1 MHz
Turn-on delay time	$t_{d\ (on)}$	—	7.5	—	µs	I_D = –7.5 A V_{GS} = –5 V R_L = 4 Ω
Rise time	t_r	—	36	—	µs	
Turn-off delay time	$t_{d\ (off)}$	—	32	—	µs	
Fall time	t_f	—	29	—	µs	
Body-drain diode forward voltage	V_{DF}	—	–1.0	—	V	I_F = –15 A, V_{GS} = 0
Body-drain diode reverse recovery time	t_{rr}	—	200	—	ns	I_F = –15 A, V_{GS} = 0 di_F/dt = 50 A/µs
Over load shut down operation time Note4	t_{os1}	—	3.7	—	ms	V_{GS} = –5 V, V_{DD} = –12 V
	t_{os2}	—	1	—	ms	V_{GS} = –5 V, V_{DD} = –24 V

Notes: 3. Pulse test

4. Include the time shift based on increasing of channel temperature when operate under over load condition.

Main Characteristics

Power vs. Temperature Derating

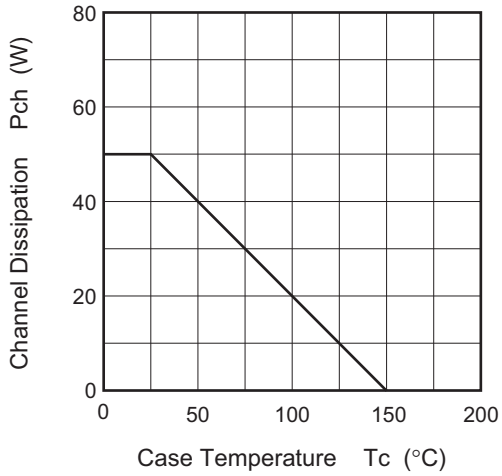

Maximum Safe Operation Area

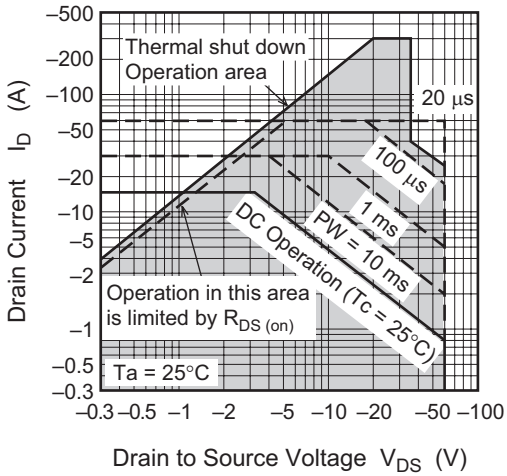

Typical Output Characteristics

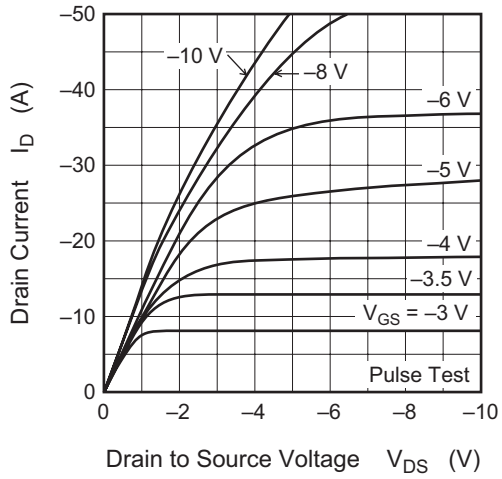

Typical Transfer Characteristics

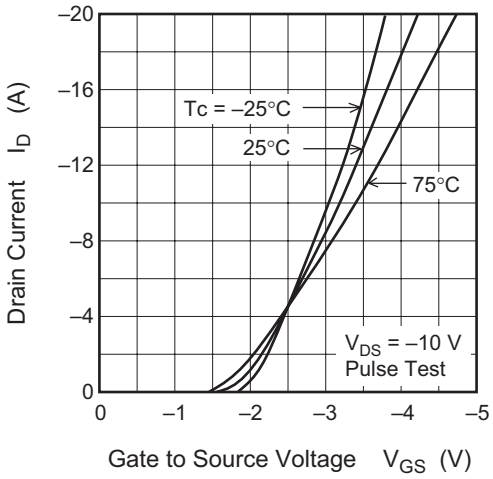

Drain to Source Saturation Voltage vs. Gate to Source Voltage

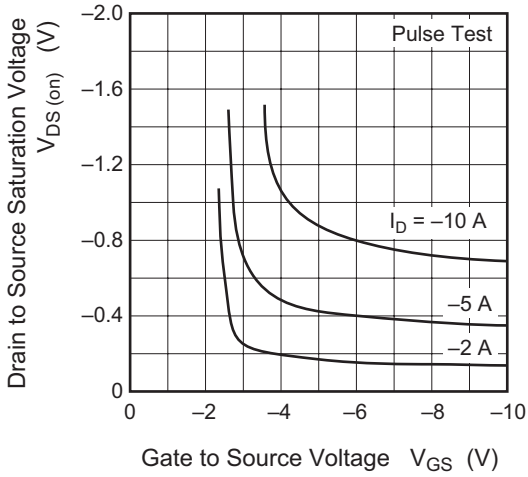

Static Drain to Source on State Resistance vs. Drain Current

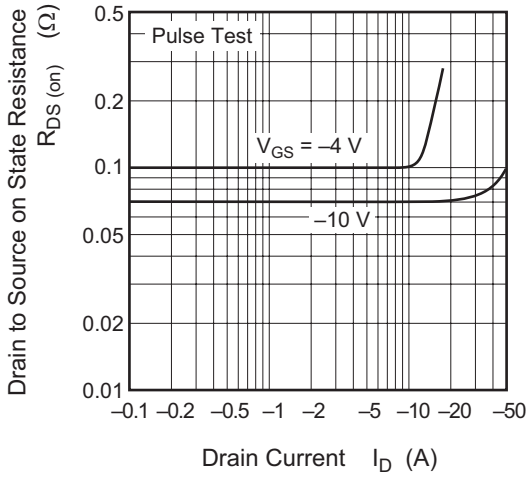

Static Drain to Source on State Resistance vs. Temperature

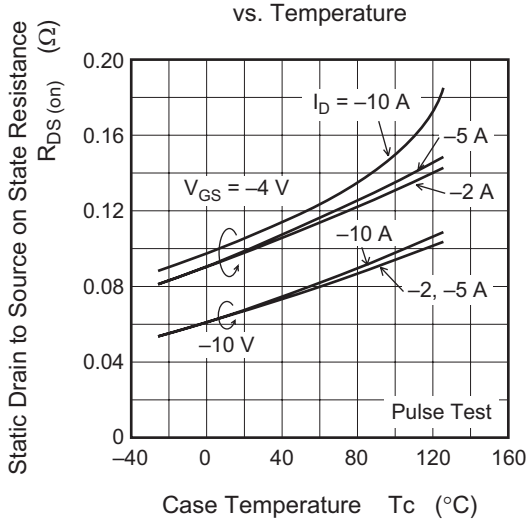

Forward Transfer Admittance vs. Drain Current

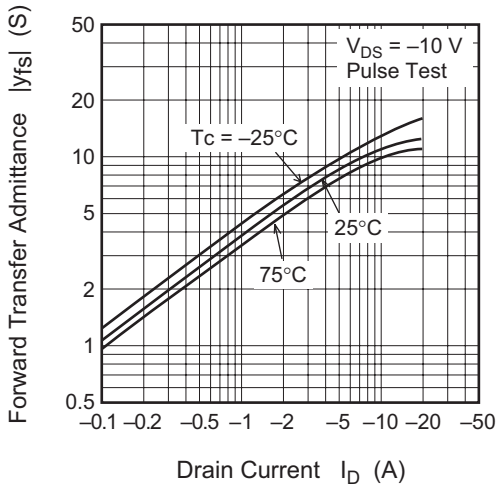

Body-Drain Diode Reverse Recovery Time

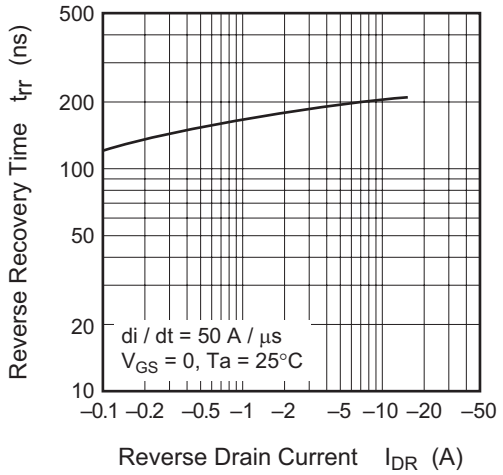

Switching Characteristics

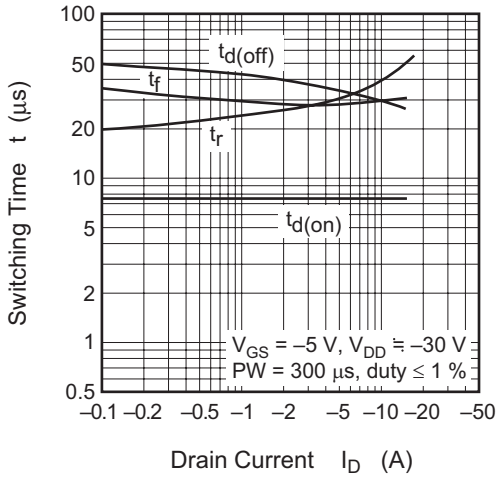

Reverse Drain Current vs. Source to Drain Voltage

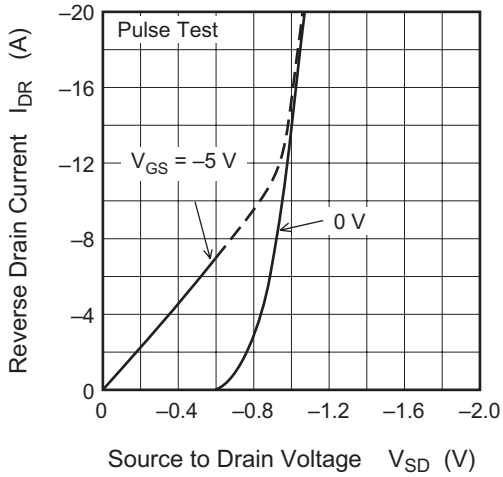

Typical Capacitance vs. Drain to Source Voltage

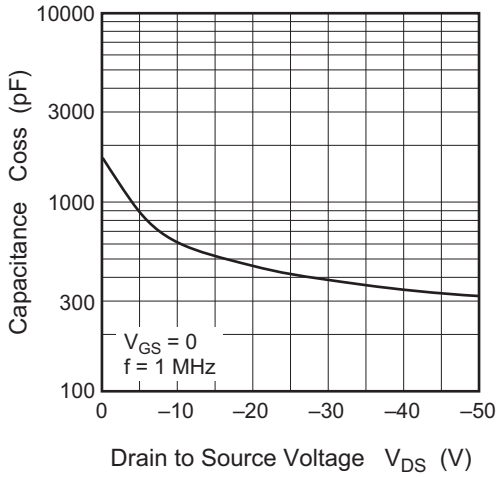

Gate to Source Voltage vs.
Shutdown Time of Load-Short Test

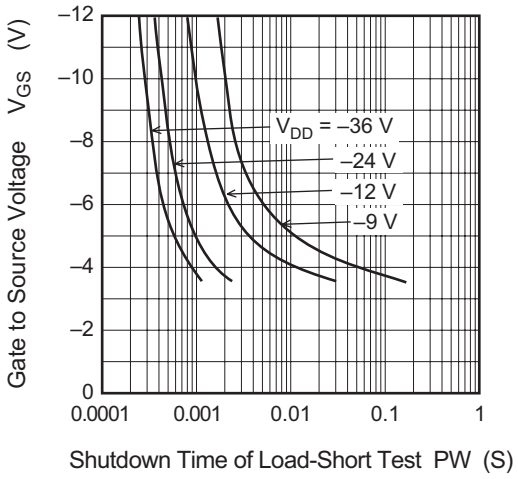

Shutdown Case Temperature vs.
Gate to Source Voltage

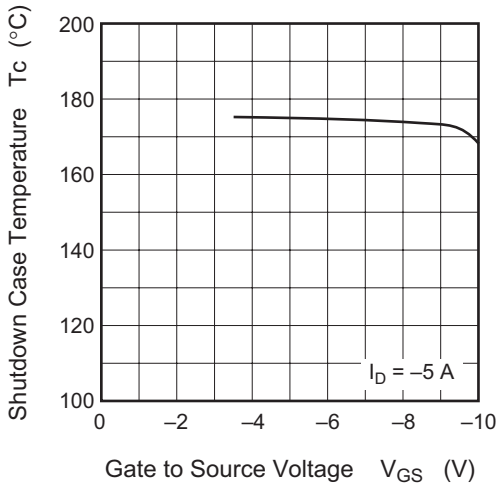

Normalized Transient Thermal Impedance vs. Pulse Width

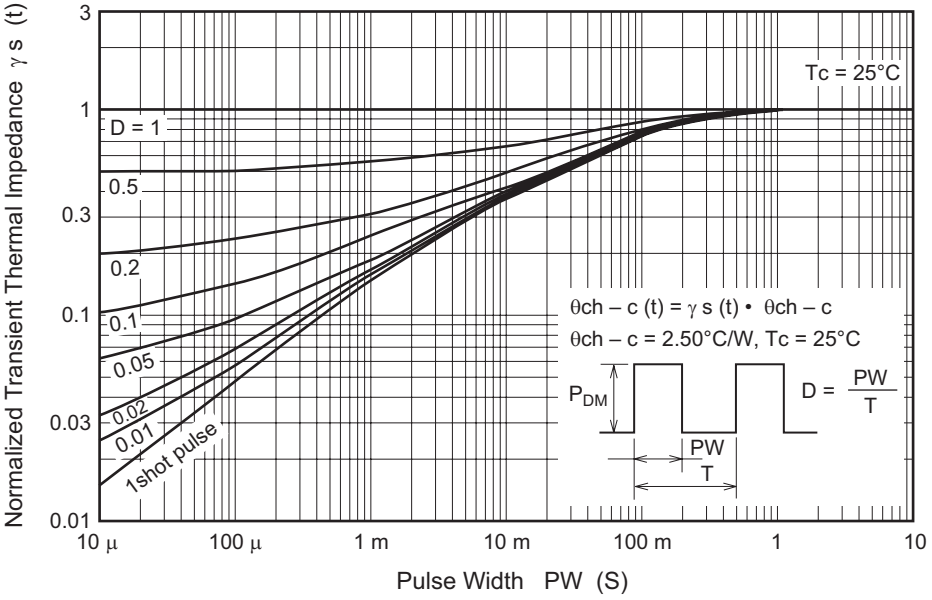

Switching Time Test Circuit

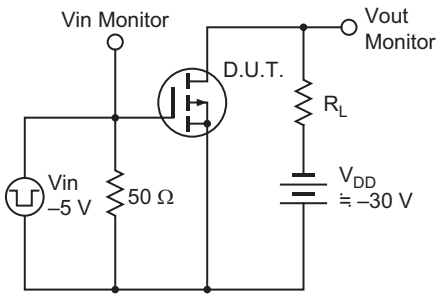

Waveform

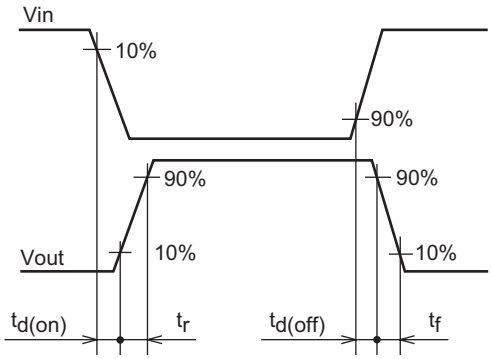

Package Dimensions

JEITA Package Code	RENESAS Code	Package Name	MASS[Typ.]
SC-46	PRSS0004AC-A	TO-220AB / TO-220ABV	1.8g

Unit: mm

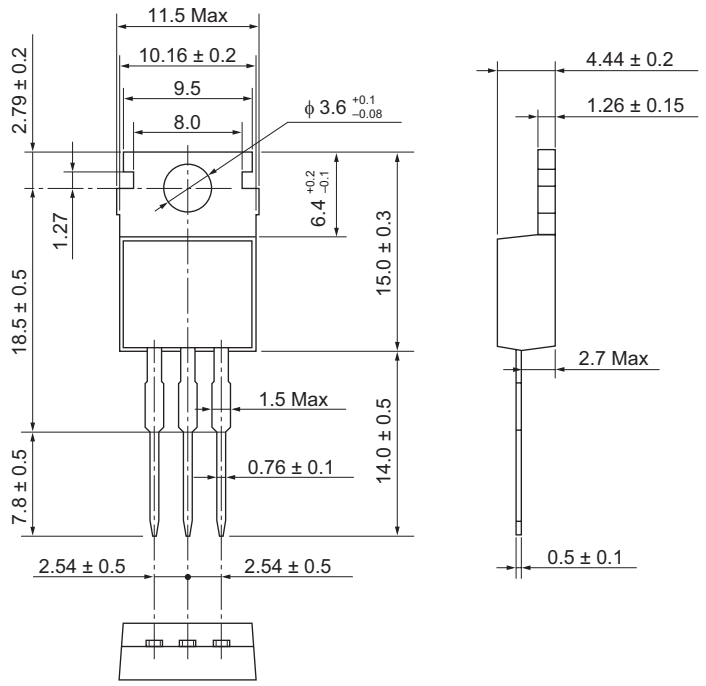

Ordering Information

Part Name	Quantity	Shipping Container
HAF1001-90	Max: 50 pcs/sack	Sack

Note: For some grades, production may be terminated. Please contact the Renesas sales office to check the state of production before ordering the product.

Renesas Technology Corp. Sales Strategic Planning Div. Nippon Bldg., 2-6-2, Ohte-machi, Chiyoda-ku, Tokyo 100-0004, Japan

Keep safety first in your circuit designs!
1. Renesas Technology Corp. puts the maximum effort into making semiconductor products better and more reliable, but there is always the possibility that trouble may occur with them. Trouble with semiconductors may lead to personal injury, fire or property damage.
Remember to give due consideration to safety when making your circuit designs, with appropriate measures such as (i) placement of substitutive, auxiliary circuits, (ii) use of nonflammable material or (iii) prevention against any malfunction or mishap.

Notes regarding these materials
1. These materials are intended as a reference to assist our customers in the selection of the Renesas Technology Corp. product best suited to the customer's application; they do not convey any license under any intellectual property rights, or any other rights, belonging to Renesas Technology Corp. or a third party.
2. Renesas Technology Corp. assumes no responsibility for any damage, or infringement of any third-party's rights, originating in the use of any product data, diagrams, charts, programs, algorithms, or circuit application examples contained in these materials.
3. All information contained in these materials, including product data, diagrams, charts, programs and algorithms represents information on products at the time of publication of these materials, and are subject to change by Renesas Technology Corp. without notice due to product improvements or other reasons. It is therefore recommended that customers contact Renesas Technology Corp. or an authorized Renesas Technology Corp. product distributor for the latest product information before purchasing a product listed herein.
The information described here may contain technical inaccuracies or typographical errors.
Renesas Technology Corp. assumes no responsibility for any damage, liability, or other loss rising from these inaccuracies or errors.
Please also pay attention to information published by Renesas Technology Corp. by various means, including the Renesas Technology Corp. Semiconductor home page (http://www.renesas.com).
4. When using any or all of the information contained in these materials, including product data, diagrams, charts, programs, and algorithms, please be sure to evaluate all information as a total system before making a final decision on the applicability of the information and products. Renesas Technology Corp. assumes no responsibility for any damage, liability or other loss resulting from the information contained herein.
5. Renesas Technology Corp. semiconductors are not designed or manufactured for use in a device or system that is used under circumstances in which human life is potentially at stake. Please contact Renesas Technology Corp. or an authorized Renesas Technology Corp. product distributor when considering the use of a product contained herein for any specific purposes, such as apparatus or systems for transportation, vehicular, medical, aerospace, nuclear, or undersea repeater use.
6. The prior written approval of Renesas Technology Corp. is necessary to reprint or reproduce in whole or in part these materials.
7. If these products or technologies are subject to the Japanese export control restrictions, they must be exported under a license from the Japanese government and cannot be imported into a country other than the approved destination.
Any diversion or reexport contrary to the export control laws and regulations of Japan and/or the country of destination is prohibited.
8. Please contact Renesas Technology Corp. for further details on these materials or the products contained therein.

RENESAS SALES OFFICES

http://www.renesas.com

Refer to "**http://www.renesas.com/en/network**" for the latest and detailed information.

Renesas Technology America, Inc.
450 Holger Way, San Jose, CA 95134-1368, U.S.A
Tel: <1> (408) 382-7500, Fax: <1> (408) 382-7501

Renesas Technology Europe Limited
Dukes Meadow, Millboard Road, Bourne End, Buckinghamshire, SL8 5FH, U.K.
Tel: <44> (1628) 585-100, Fax: <44> (1628) 585-900

Renesas Technology (Shanghai) Co., Ltd.
Unit 204, 205, AZIACenter, No.1233 Lujiazui Ring Rd, Pudong District, Shanghai, China 200120
Tel: <86> (21) 5877-1818, Fax: <86> (21) 6887-7898

Renesas Technology Hong Kong Ltd.
7th Floor, North Tower, World Finance Centre, Harbour City, 1 Canton Road, Tsimshatsui, Kowloon, Hong Kong
Tel: <852> 2265-6688, Fax: <852> 2730-6071

Renesas Technology Taiwan Co., Ltd.
10th Floor, No.99, Fushing North Road, Taipei, Taiwan
Tel: <886> (2) 2715-2888, Fax: <886> (2) 2713-2999

Renesas Technology Singapore Pte. Ltd.
1 Harbour Front Avenue, #06-10, Keppel Bay Tower, Singapore 098632
Tel: <65> 6213-0200, Fax: <65> 6278-8001

Renesas Technology Korea Co., Ltd.
Kukje Center Bldg. 18th Fl., 191, 2-ka, Hangang-ro, Yongsan-ku, Seoul 140-702, Korea
Tel: <82> (2) 796-3115, Fax: <82> (2) 796-2145

Renesas Technology Malaysia Sdn. Bhd
Unit 906, Block B, Menara Amcorp, Amcorp Trade Centre, No.18, Jalan Persiaran Barat, 46050 Petaling Jaya, Selangor Darul Ehsan, Malaysia
Tel: <603> 7955-9390, Fax: <603> 7955-9510

© 2006. Renesas Technology Corp., All rights reserved. Printed in Japan.

Colophon .6.0