| DWG. NO. | 400-510-1410G |
|---|---|

| REV | DESCRIPTION | BY DATE | APPD |
|---|---|---|---|
| A | RELEASE PER NPR 2272 | JMC 2/14/01 | |

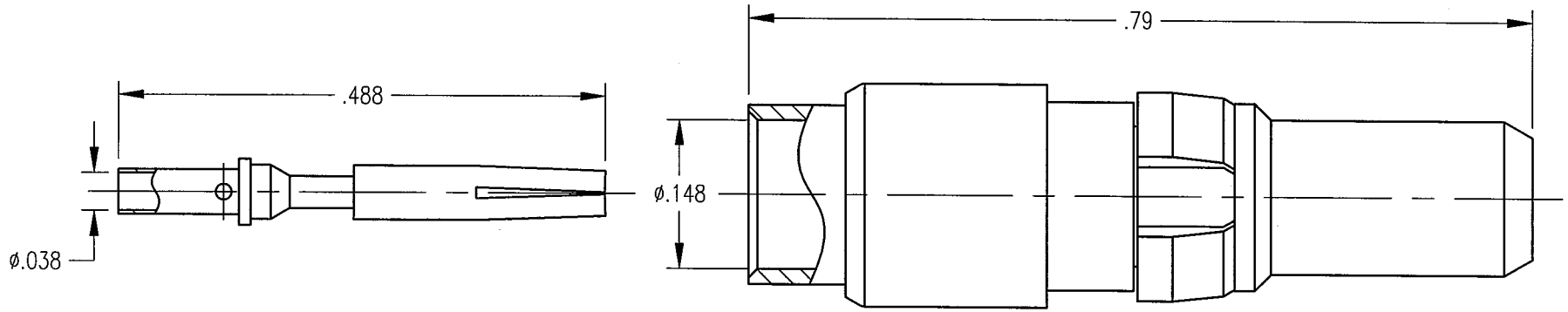


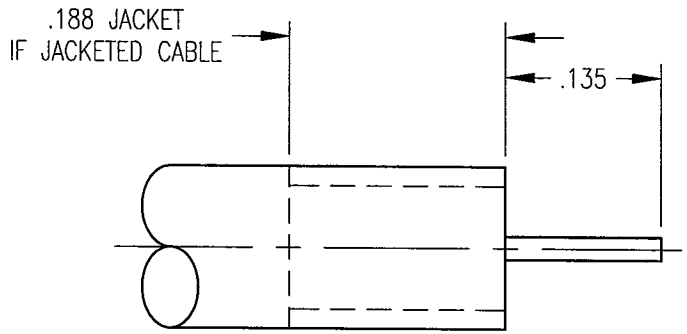


CABLE TRIMMING DIMENSIONS

NOTES;

1. MATERIALS:
   BODY: BRASS PER ASTM B16
   CONTACT: COPPER ALLOY
   CLIP RING: BERYLLIUM COPPER PER ASTM B194
   INSULATOR: TEFLON PER ASTM D1710
2. FINISH:
   FRONT BODY AND CONTACT: .000030 MIN. GOLD PER MIL-G-45204 OVER .000050 MIN. NICKEL PER QQ-N-290
   REAR BODY: .000015 MIN. GOLD PER MIL-G-45204 OVER .000050 MIN. NICKEL PER QQ-N-290
   CLIP RING: .000100 MIN. NICKEL PER QQ-N-290 OVER COPPER FLASH
3. FOR USE WITH .141 DIA. SEMI-RIGID CABLE OR EQUIVALENT.
4. FOR CABLING PRCEDURES USE CAP 5-15 WITH TRIMMING DIMENSIONS SHOWN.

PER ASME Y14.5M-1994
UNLESS OTHERWISE SPECIFIED:
DIMENSIONS ARE IN INCHES/MM OR INCHES/MM
TOLERANCES:
DECIMALS .XX ± .01/0.254
.XXX ± .005/0.127
ANGLES ± 2°
SCALE: 6:1

**CUSTOMER DRAWING**

| DRAWN | DATE | CHECKED | DATE |
|---|---|---|---|
| KJT | 10/28/99 | JED | 10/29/99 |
| APPROVED | DATE | APPROVED | DATE |
| JMC | 10/29/99 | JC | 10/29/99 |

**Litton**
**Winchester Electronics/RETCONN**
400 Park Road
Watertown, Connecticut 06795

TITLE
31 SERIES STRAIHT PLUG FOR DIN HOUSING

| A | 400-510-1410G | SHT. 1 OF 1 | REV. A |
|---|---|---|---|

June 2006 - This drawing became the property of Winchester Electronics Corporation, Wallingford, CT.