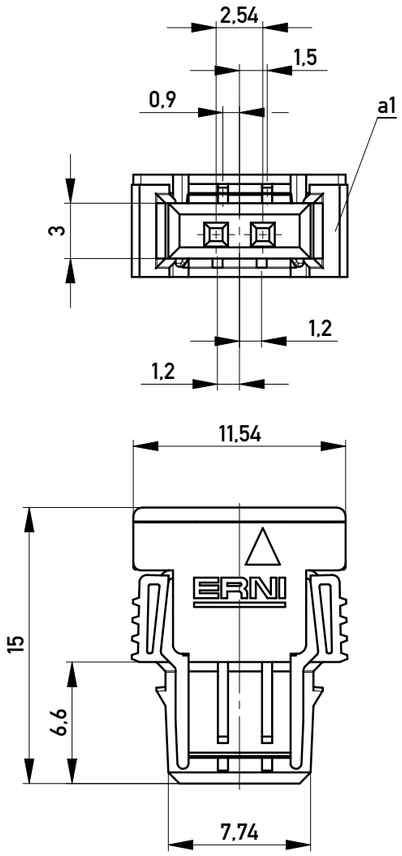

Abdeckung vorverrastet
cover loose mounted

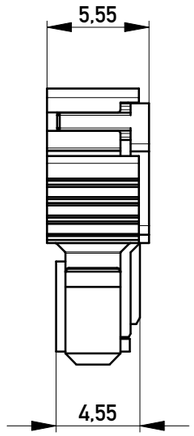

Abdeckung verpresst
cover pressed on

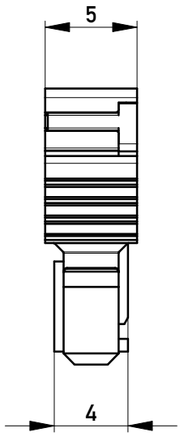

Verpackt in Tray - *tray packaging*
Verpackungseinheit 182 Stück - *packaging unit 182*

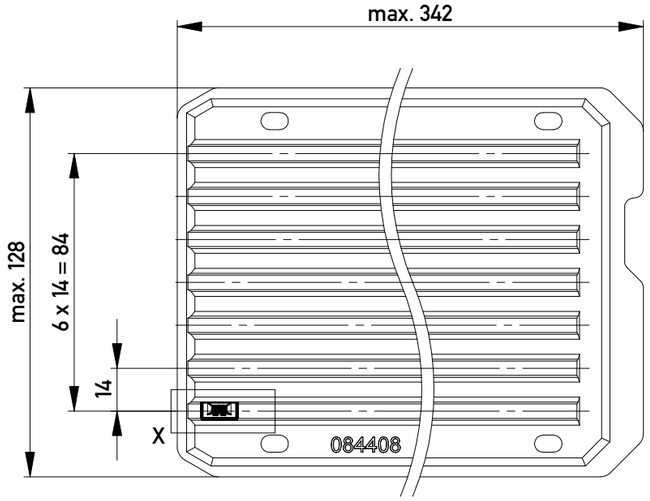

Einzelheit X
detail X

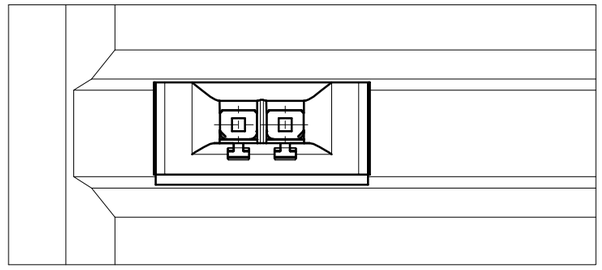

Copyright by ERNI GmbH
Proprietary notice pursuant to ISO 16016 to be observed.

Information: Codierung blau - *coding blue*	Tolerances All Dimensions in mm	Scale 3:1	
All rights reserved. Only for Information. To ensure that this is the latest version of this drawing, please contact one of the ERNI companies before using.	Subject to modification without prior notice. Drawing will not be updated.	Designation F 2,54 SRC-A, 2-polig BA 2	
d / 28.07.2015	www.ERNI.com	102903880001	K
Index / Date		Class SRCBUG	A3